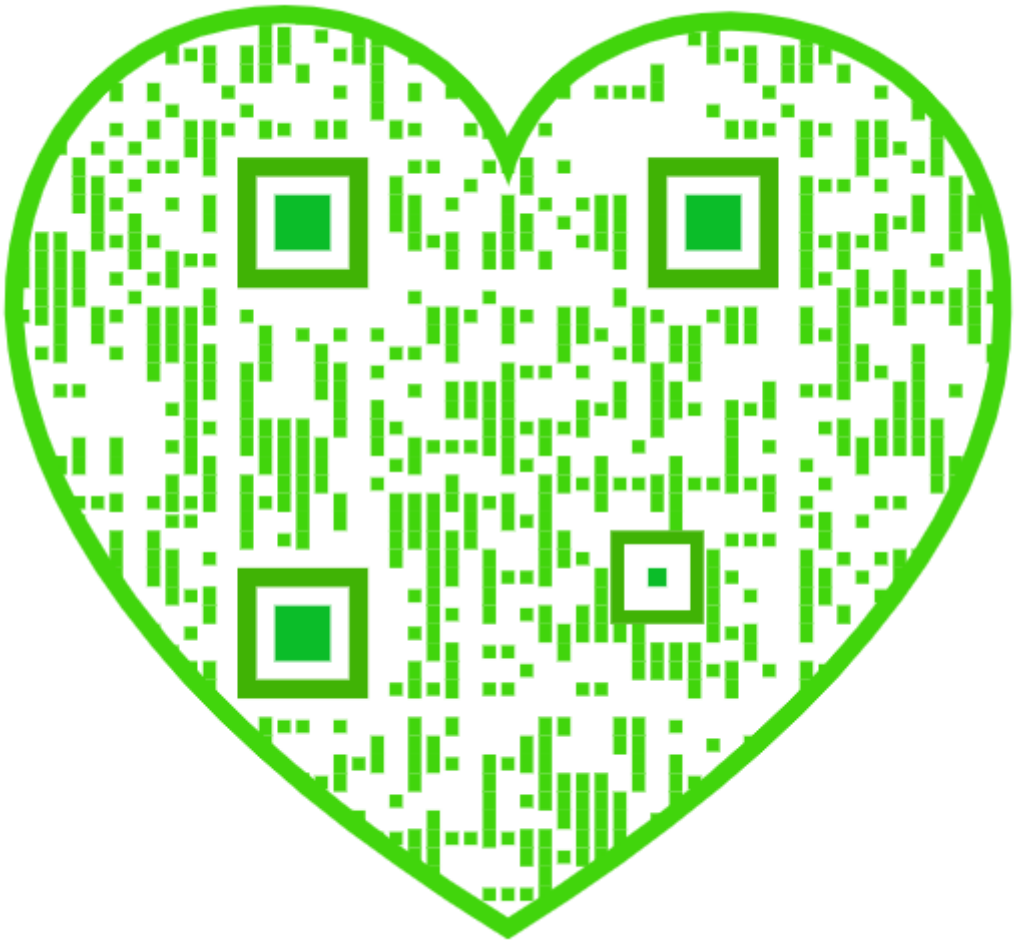

THE STEAM ENGINE

AND

GAS AND OIL ENGINES

THE STEAM ENGINE

AND

GAS AND OIL ENGINES

78360

A BOOK FOR THE USE OF STUDENTS
WHO HAVE TIME TO MAKE
EXPERIMENTS AND
CALCULATIONS

BY

JOHN PERRY, D.Sc., F.R.S.,

PROFESSOR OF MECHANICS AND MATHEMATICS IN THE ROYAL COLLEGE OF SCIENCE
VICE-PRESIDENT OF THE INSTITUTION OF ELECTRICAL ENGINEERS
VICE-PRESIDENT OF THE PHYSICAL SOCIETY

London
MACMILLAN AND CO., LIMITED
NEW YORK: THE MACMILLAN COMPANY
1899

All rights reserved

RICHARD CLAY AND SONS, LIMITED,
LONDON AND BUNGAY.

PREFACE

THIS is a book for students who have time to work many exercises. Almost every table of numbers is supposed to be worked out by the reader himself, or if he is supposed to verify only some of the numbers he must use the table in working other exercises. As an example of what I mean, consider Chap. III., in which a student is supposed to work out every number. If he is a beginner who knows but little mathematics he will work on squared paper, and he is led gradually through his own work to see, not only the value of expansion but the limit to its value because of back pressure and condensation; he sees for himself also the nature of the Willans Law. But the very same work ought to be done by an advanced student, only he will probably use formulæ which he can prove to be correct, instead of squared paper. Now the knowledge conveyed in this simple manner is of the very greatest importance, but it is usually assumed that no beginner can take it in. Indeed I may say that advanced students have usually only a very vague comprehension of this kind of knowledge. There is all the difference in the world between an attempt to study by mere reading and a real study through the actual doing of work.

Readers have great faith. Tell them that some philosopher obtained a certain law of adiabatic expansion of steam and they use that law, never testing it for themselves, although the test may only need half an hour's work. Tell them that there is a method used by everybody for showing the wetness of the steam in a cylinder, on the indicator diagram, and they use that method, although the exercise of a little common-sense would show them that the method is based on a fallacious assumption. There has been far too much of this

taking things for granted; there may have been some excuse for doing it in the past, but there is no excuse now, for through Mr. McFarlane Gray and others we have very easy means of testing things for ourselves. I am sorry to say that since Rankine's time, no man with a good knowledge of physics and mathematics seems to have devoted himself to a study of the steam engine. There are men who have done very useful work; the text books are filled with the names of men who have done useful small things, but unfortunately the text books give as great weight to some of the results arrived at logically from wrong data as if Rankine himself had worked them out. There is a man better equipped than even Rankine was for the solution of steam engine problems, but unfortunately he devotes himself to isolated problems having only an indirect bearing upon steam-engine practice.

If I am looked upon as a person who wishes to give results to be used in faith by my pupils, it will be very easy to find many faults in this book. But I beg to say that I occupy a very different position. I aim, throughout, at showing a student how he, himself, may attack problems which are, as yet, only partially solved, and if I give some of my own speculations, it is only when they are suggestive and likely to incite a student to go on with the study through experiment and calculation along lines which seem to me good ones.

JOHN PERRY.

ROYAL COLLEGE OF SCIENCE,
22nd February, 1899.

CONTENTS

CHAP.		PAGE
I.	INTRODUCTORY	1
II.	THE COMMONEST FORM OF STEAM ENGINE	15
III.	THE VALUE OF EXPANSION	72
IV.	THE INDICATOR	84
V.	THE INDICATOR (CONTINUED)—A SET OF EXERCISES	97
VI.	THE RECIPROCATING MOTION	118
VII.	HOW THE VALVE ACTS	124
VIII.	VALVE GEARS	139
IX.	THE EXHAUST AND FEED	153
X.	FLY-WHEEL AND GOVERNOR	165
XI.	THE BOILER	177
XII.	STRENGTH OF BOILERS	196
XIII.	HEATING ARRANGEMENTS OF BOILERS	209
XIV.	BOILERS (CONTINUED)	217
XV.	NUMERICAL CALCULATION	237
XVI.	ENERGY ACCOUNT	249
XVII.	THE HYPOTHETICAL DIAGRAM	285
XVIII.	TEMPERATURE AND HEAT	302
XIX.	PROPERTIES OF STEAM	315
XX.	PROPERTIES OF GASEOUS FLUIDS	331
XXI.	WORK AND HEAT	336
XXII.	WORK AND HEAT—ENTROPY	344
XXIII.	WATER—STEAM	358

CHAP.		PAGE
XXIV.	Cylinder Condensation	375
XXV.	Combustion and Fuel	401
XXVI.	The Efficiency of a Boiler	423
XXVII.	Gas and Oil Engines	439
XXVIII.	Valve Motion Calculation	481
XXIX.	Inertia of Moving Parts	532
XXX.	Kinetic Theory of Gases	553
XXXI.	Thermodynamics	563
XXXII.	Superheated Steam	573
XXXIII.	How Fluids give up Heat and Momentum	585
XXXIV.	Jets of Fluid	598
XXXV.	Cylinder Condensation	618
INDEX		633

THE STEAM ENGINE.

CHAPTER I.

INTRODUCTORY.

1. EVERYBODY thinks that the books he read in his boyhood were far more interesting than boys' books now. In one of my school books there was a story about people cast away on a desert island, who discovered and made friends with three delightful giants, who actually loved to do work, and only wanted to be superintended. Their names were "Flowing Water," "Wind," and "Vapour." **Nature's stores of energy** are indeed like helpful giants to us, but they need superintendence, and we need to study their ways.

In that old story the men who discovered and utilized the services of the giants were men who had reverence and wonder and an eye for beauty of all kinds, for without these can no man invent; and because they had these fine qualities they also had that uncommon gift called common sense, and so they knew that two and three make five, and not six or merely four. That is, these men could calculate; they had a quantitative experimental knowledge of mechanics and physics. Without these kinds of knowledge you cannot understand the steam engine, although it is possible that you may get to be called engineers, for there are many children of Gibeon who can get people to call them engineers.

That a student may be aware of the kind of knowledge which ought to be familiar to engineers, I give many numerical exercises, and these ought to be worked. I must assume then that my readers know something of applied mechanics, and how to calculate the work necessary to be done in many common operations, and also how to make calculations concerning stores of mechanical energy. Mechanical energy is convertible into heat by friction, and everybody

knows this, but I assume that my readers have a **quantitative knowledge** of the fact, based upon their own experience; in fact that they have measured Joule's equivalent for themselves, and worked many numerical exercises on the conversion of one form of energy into another. Again, they are supposed to know something of chemistry, sufficient to let them grasp the idea that by letting certain chemical substances combine we can obtain energy: in the case of coal and the oxygen of the air, we usually get the energy in the form of heat, but in the case of some other substances, we get the energy in the much more manageable form of electrical energy. Mere reading and numerical work and listening to lectures are of themselves of no use; laboratory work of itself is of no use; a wide and exact knowledge of this great subject comes to us only gradually, and it never comes to a man who does not combine these various methods of study.

We have first to recognize Nature's great stores of energy, and to estimate their magnitude; in the second place we must learn how to make them available for our purposes. In the following pages I shall sometimes assume that my readers already know a great deal about the subject, and at other places I shall assume that they do not yet really know some of the most elementary facts of heat and mechanics. It is easy to make use of water-power, and my readers know how to make all sorts of calculations about it. It is heat from the sun which causes evaporation from seas to form rain and waterfalls. Wind power was utilized by our ancestors before they knew the use of metals. When we utilize this gift of Nature we steal not from the energy of rotation of the earth on its axis, but from the sun's heat. When we use fuel we utilize the energy radiated in past times to the earth, as heat and light from the sun, and perhaps it is only when we convert the mechanical energy given out by our bodies into heat by friction that we learn how intense is the storage of energy in a pound of fuel.

2. Nature's stores of energy are enormous when we compare them with, say, the work that a strong labourer will do in a day. When a labourer lifts 50 lbs., 60 feet high, he does 3,000 foot pounds of work. When I carelessly run off a bath full of hot water, say 20 cubic feet or 1,250 lbs. of water at 38° C. (or 100° F.), on a winter day, when the supply water is, say at 2° C. (or 35° F.), the energy that escapes is equivalent very closely to the work done by the labourer in 20,000 of his journeys, or 62½ millions of foot pounds. The energy obtainable from the burning of a pound of coal is about 12 million foot pounds, and from a pound of kerosene 17 millions. Now consider

that we may take **the sun** to have a surface as great as 12,000 times that of the earth, and we may imagine that more than half a ton (1,200 lbs.) of coal is burnt completely on every square foot of that surface every hour (about 60 times the intensity of firing in the best factory boiler furnace) [this is really about 7,250 horse-power developed as heat on every square foot]; this will give us a fair idea of the rate at which the sun is losing heat; now imagine that this enormous waste has been going on for 1,000 million years, and you have some idea of the waste of energy that has gone on in our corner of the universe. Or rather, you begin to see how hopeless it is to imagine the greatness of Nature's waste of energy. It is probable that the store of energy in any small portion of the universe in another form than that known to mechanical, or heat, or chemical engineers, might lead us to figures very much greater still; but it is not necessary here to refer to this quite different matter. Nature's greatest stores of energy are not available, possibly through our present want of knowledge; but I am inclined to think that they are really not available at all. Of the available stores the most important is that of coal, and it is necessary at once for us to become possessed of a definite knowledge of the value of coal.

When a **pound of average coal** is carefully burnt and all the available heat is measured, we find that it gives out about 8,500 centigrade or 11,700 Fahrenheit heat units, and this is equivalent to 12 million foot pounds. This 12 million foot pounds is a good figure to keep in one's memory as the calorific value of one pound of average coal (see Art. 256). Other good numbers to remember are 17 million for a pound of kerosene and 530,000 foot pounds as the calorific value of one cubic foot of average coal gas at atmospheric pressure and 0° C. Now if it is remembered that the engineer's unit of power is

1 horse-power = 33,000 foot pounds per minute,

it is quite easy to make certain calculations which engineers require to do nearly every day of their lives. Thus a supply of 1 lb. of coal per hour means a supply of 12 million foot pounds of energy per hour, or 200,000 foot pounds per minute, or 6 horse-power.

It is only a **large and good steam engine** which gives out actually one useful horse-power for every 2 lbs. of coal per hour burnt in the furnace; hence a very good steam engine takes 12 horse-power as heat and gives out only 1 horse-power usefully mechanically. Even a very good engine (including the boiler) therefore takes a shilling, returns a penny usefully, and wastes elevenpence. In any

machine we usually mean by *efficiency* the useful power given out divided by the total power supplied; we see that even a very good steam engine and boiler has an efficiency of only $\frac{1}{12}$. It will be found later that bad efficiency is incidental to all engines which take energy as heat and give out mechanical energy.

Steam engines are approaching perfection, and for reasons to be given in Chap. XVI. we cannot expect much better results than the above. There is much better promise in gas engines. Well-made large engines are always more efficient than small ones. It is only a large steam engine of 200 horse-power or more that will give the above result. Even a large engine, if it works on a varying load like the engines of an electric or hydraulic company, will give results only one-third as good as the above; whereas many small common engines give out on the average only 1 per cent. of the whole energy supplied to them, wasting the other 99 per cent.

Now even a **small gas engine** using Dowson gas, made from anthracite, has been known to give out one useful horse-power for 1 lb. of coal. This means an efficiency which is twice as great as that of many large factory steam engines, of whose performance their makers are proud.

If coal could be burnt as zinc is burnt in an electric battery, and used in an electric engine instead of a heat engine, we might expect to convert more than 90 per cent. of the total energy into mechanical work instead of less than 8 per cent. The **fuel consumed by animals** is converted so largely into useful work that we are perfectly certain that the engine of animals is not a heat engine, but rather an electric engine. We are gradually getting some knowledge of the animal mechanism, and when we are able to imitate Nature's methods our steam and other heat engines will be looked upon as barbarous. In the meantime we are improving the steam engine. It is inherently wasteful, but it gives us great power with comparatively small weight and size. Every traveller by land or water knows how easily the power of many hundreds or thousands of horses is given out by a compact machine under easy control, and how the civilization of the world rests mainly upon the much maligned steam engine.

3. If a student can easily put his hand upon a few price lists of the best engineering firms, let him make out a table of the weight and cost and horse-power of engines and boilers of various sizes. Sometimes he can help himself by drawing curves. Also he ought to know something of the **prices paid for energy.** The price paid for work done by a labourer is excessive, compared with the price paid

for the same amount of work done by an engine. When intelligence enters largely we can understand why the price should be high. At page 252 I have gathered together a few facts on the price of energy, such as every practical man ought to keep in his head.

Work done by a steam engine where coal is cheap is almost cheaper than by any other agent. We can hardly compare this with the cost of energy from a turbine unless we assume the waterfall as given for nothing, so that the cost of energy will only depend upon interest and depreciation on the cost of the machinery and wages for attendance. A good modern engine of about 1,000 horse-power, working under a constant load night and day, gives one horse-power for about a farthing per hour, or about £9 per year, in a country district where land, coal, and wages are cheap. This price is greatly increased as the engine is smaller and as the load is less constant, so that small steam engines in towns are more expensive than small gas engines, whose power including all charges may be put at 1d. per hour per horse-power, being only half this when the engines are of about 100 horse-power. For small powers, gas engines or oil engines are particularly to be recommended, principally because they may be so readily started and stopped and require so little attention.

A horse-power is equivalent to 746 watts.

A not unusual charge of an electric company is 5*d.* per Board of Trade unit. A Board of Trade unit is 1,000 watts for one hour, or $\frac{1000}{746}$ horse-power for one hour; that is, the cost is $3\frac{3}{4}d.$ per electrical horse-power hour. This great charge is mainly due to the fact that the output of an electric station fluctuates very greatly. The plant is there all the time, sufficient in size for the maximum demand, and yet for twenty hours out of the twenty-four there is a demand for very little power. It is for the same reason that the cost of a horse-power hour from an hydraulic company is 2*d.* to 4*d.* It is the great comparative cheapness of power from well-designed steam engines which is most prominent in all calculations that we make; power from coal is 500 times as cheap as power from the best manual labour, and it is in consequence of this fact that there has been such an enormous development of manufactures in the last 150 years.

4. When did man begin to utilize the energies of Nature, other than his food, in the production of mechanical power? The earliest dwellers in mountains must surely have used the potential energy of lifted rocks when their foes were conveniently placed underneath them. Did even the early Egyptians use either wind or water power? They probably let the wind propel small boats. The military engines and

ships of the Greeks and Romans, wonderful contrivances, were actuated by men and animals. It is true that Hero of Alexandria, 120 B.C., used steam to turn a re-action wheel, and the Egyptian priests used the pressure of vapours in performing their mysteries, and there was some knowledge of the pressure and heat properties of fluids, but it was not till the fifteenth century that we began to use Nature's stores of energy. The yew bow of England stored sufficient energy to cause an arrow to penetrate light armour. The cross bow stored much more energy, and knights could no longer safely attack the rank and file of an army. But the first heat engine, a gas engine using gunpowder, a gun, may be said to begin the history of our subject. Here the useful energy produced from heat is the kinetic energy of a projectile. We have no more efficient heat engine for obtaining ordinary mechanical power than were even the first **forms of guns.** If we could only convert kinetic energy easily into the other mechanical forms of energy, we should probably return to the gun form.

FIG. 1.—HERO'S ENGINE.
Boiler below. The right hand support is a pipe with stuffing box conveying steam to the hollow sphere.

5. But for a student of our subject who is a beginner, its **mere history** is probably one of the very worst of studies. The student of history fails to notice that traffic has always steadily increased on common roads, and that although railway traffic may steadily increase it may become less important again than the road traffic, and he does not notice how the value of a thing depends on many other things. Hero (120 B.C.) described a steam turbine, Fig. 1; Branca (1629 A.D.), led steam by a pipe from a boiler to impinge on the vanes of a wheel to drive it, Fig. 2. These inventions are looked upon with good-natured contempt by the man who speaks of the gradual improvements of the steam engine through Solomon de Caus, and that unfortunate victim of a worthless king, the Marquis of Worcester, as well as through the pumping engines of Savery, Newcomen and Watt. Great improvement there certainly has been, but as to its exact nature I should prefer the judgment of the man who studies carefully the latest form of the steam engine, and gets to know

its defects before he indulges in the luxury of a study of history. As he reads the history he will note that the nature of what was called *improvement* depended upon the environments of engineers, and that these used to be very different from what they are now. He will note, for example, that the most complete drawings of the best modern steam engine would have been worthless one hundred and fifty years ago. Why, some of the oldest steam boilers had shells of stone with metal plates between the fire and water; then through copper and cast-iron they gradually became of riveted wrought iron or steel, the improvement not being in our conception of a boiler, but in tools and methods of manufacture. Let us remember that even

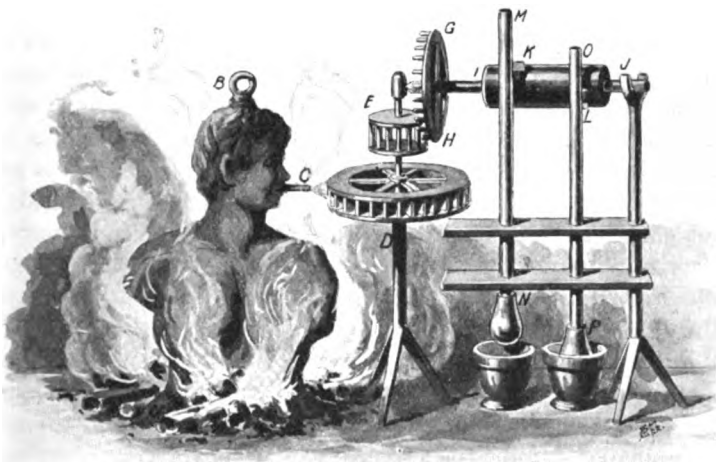

FIG. 2.—BRANCA'S ENGINE.

Watt was jubilant if his cylinder was not more than $\frac{3}{8}$ of an inch untrue in its bore.[1] It is for the understanding engineer one of his most instructive lessons to go through the historical collection of models in the **South Kensington Museum**; for the young student it may not by any means be a good lesson. The instructed man will notice that the modern type of engine may be the result of gradual improvement on the old Watt pumping engine, but it is just possible that it has retained certain characteristics of the old pumping engine which are unnecessary and hurtful, and which would certainly not be

[1] In boring a cylinder the limits of error now allowed by Messrs. Willans and Robinson are $\pm$ 0·05 of a millimetre, and there is less error allowed in other parts of an engine. The metric system of measurement is in use in these excellent shops; its introduction has given no trouble whatsoever.

visible if it had developed from another primitive form. In the seventeenth century there was one work to be done of enormous importance, requiring much power. There was a great evil, a new evil. Had it been an old evil it would have been let alone. Mines were being sunk deeper than ever they had been before; thousands of horses had constantly to be employed to keep them free from water. Here was the new evil: everybody saw the need for great power, nobody wanted power for anything else. Hence the **pumping engine** was developed, and it was only when it showed its power to do other things as well as pump, that men ventured to prophesy

> "Soon shall thy arm, unconquered steam, afar
> Drag the slow barge, or drive the rapid car."

It is useless to consider what would have happened if it had been absolutely necessary to drive great factories in the time of Branca. Why! the very engine of Branca, almost without improvement, has lately been brought into use, and already competes in economy with the very best steam engines of equal power. There is a great deal of virtue in a revolving wheel. It may go at great speed, and yet not shake the framework which supports it, even when this framework is light. The very earliest engine, that of Hero, was really a revolving wheel, a reaction turbine, and as I write this [April, 1897] I have received a letter from a friend in Newcastle to say he had just been out on the new Parsons' turbine steam boat, and that it proves to be the very fastest boat that has ever gone through the water, although only 100 feet long. And furthermore, at much smaller speeds, the very best other boats vibrate so much that a man in the stern can hardly keep himself upright, even when holding on hard, whereas at its highest speed the **Turbinia** has no vibration. See Fig. 56.

6. The English railway carriage was a developed stage-coach, and consequently even at the present day many of these carriages have shapes, ornamentation and uncomfortable arrangements of their space, which look ridiculous to a person ignorant of the history of their **gradual development.** Use and wont have made us fond of them, and in argument we defend their every defect as if it were really a virtue. The original steam boiler was shaped like a domestic copper or kettle, and remained so even when flues were used; when fitted to steamers it took the shape of the steamer, but it was still merely a superior sort of kettle, and although the value of high pressure was known, high pressures were not used, because they would require boilers radically different in shape. Even now the locomotive boiler

is as nearly of the shape used in Stephenson's *Rocket*, as it can be kept: it is quite absurd to think that this shape would be chosen by an unprejudiced engineer (if such a person could be found) if he were asked to design the most suitable form of boiler for its purpose. I have, perhaps, no right in such a book as this to ask how long it will be before the locomotive boiler is made so that it will not contain more steam and water than are sufficient for a few minutes' work of the engine, but it seems to me that at present one half of all the valuable properties of an engine are sacrificed to a dislike for radical change.

Throughout applied physics we find this **conservative tendency.** In so far as it makes us cautious and afraid to adopt new-fangled and untried notions, it is useful and good; there is safety and certainty in a well-known thing, whose defects are well-known, and have already been guarded against. It is only excessive and persistent shrinking from all alteration that I condemn. When I was an apprentice I was taught that there was something almost sacred in the necessity for **beams and parallel motions** in the best steam engines; they were merely the lineal descendants of the beams of Newcomen's engines, and had no more to do with the real efficiency or good working of the engines than the two hind buttons are to the fit or fastening or beauty of a frock coat. These buttons are the lineal descendants of the buttons that used to fasten back the coat flaps of our ancestors.

7. When Aladdin first discovered the power at his command it is remarkable how conservative he was in his notions. He made the genius bring him silver dishes, because he started in the silver dish line, and there is one of the most interesting of lessons in the fact that although each of his silver dishes was worth sixty pieces of gold, he sold each of them for one piece of gold over and over again. Aladdin's imagination had to be stirred by a violent emotion before he could make the genius work in other ways for him. Even at his best I believe that Aladdin never took full advantage of the power of the wonderful lamp. His finest palace was probably just an ordinary house, made very large and stuck over with precious stones, as vulgar as Milan Cathedral. The engineer, far more than Aladdin, needs to have his imagination developed, because Aladdin's power was unlimited, whereas, great as the stores of Nature are, they are not all for the engineer to develop. It is possible that future scientific men may discover some way of developing them, but so far as we can see there is no great store of energy available for man which is in any way comparable with coal.

For the last twenty years I have lifted up my voice occasionally

in the hearing of a not unbelieving but a half-hearted generation, to warn men of the time to come, when their great stores of energy **will be exhausted.** The chancery law of England is destroying invention in all but small details; but if I am right in my beliefs, it would be worth while for our government to hand over a few millions of money to its best scientific men, telling them to squander it in all sorts of experiments, in an intense search for some method by which instead of only from one-twelfth to one-hundredth of the energy of coal being utilised, nine-tenths of it might be utilised. If I am right, almost all the social and political questions which excite us now will be of small importance on the future of the human race, for the wild competition of nations and people for luxuries must gradually during the next four hundred years become a struggle for mere existence.

8. Eighteen hundred years ago Rome had numerous well-to-do citizens, and was surrounded with comfortable villas; but throughout the Roman Empire the well-to-do citizens were very few in comparison with their poor dependants or slaves. To-day, every town in England is becoming surrounded with comfortable villas; millions of people live in comfort, hundreds of thousands lead luxurious lives. But this is not only the case in England: throughout France, Germany, Italy, America, indeed all over the world, we find signs of enormous increase in numbers of a class of people who are well beyond the necessity of working for their living—people who are, we hope, developing art and literature, and the moral instincts of the nations, because they are beyond sordid cares. The phenomenon is peculiar to our own time. It was never known before in the history of the world. We also see the general population of the world increasing at an astonishing rate, and the proportion of people who may be called poor is not only less than it ever was before, but is exceedingly less. All the waste places of the earth are beginning to blossom. Irrigation has changed the yellow sand of North Texas and New Mexico and Arizona, of New South Wales and South Australia and Queensland, to green verdure, and they are filling up with people. Much of this is, we may hope, permanent; but in so far as it depends upon outside demand for agricultural produce, it will die. It would not be fair to say that the whole phenomenon is due to the steam engine. I take it that when a nation or group of nations is let alone from outside influence, the growth of its wealth increases by what we call the compound interest law, or rolling snowball law—increased wealth produces love for settled government, and settled government leads to increased wealth. But this sudden

development is surely greatly due to the steam engine. The poorest woman can easily buy clothing material and other goods that used to come on camels' backs in small quantities from the looms of India for the ornamentation and delectation of emperors and their nobles only. Quite common men live now in houses furnished with luxuries of which no potentate of the Middle Ages could dream.

I think it to be evident that very much the greater part of all that goes to make up **our civilisation** is directly or indirectly to be traced to our utilisation of coal, and it is just as evident that when our stores of coal get exhausted the greater part of all this wealth and evidence of civilisation must disappear. The world will not be left in its old state. The old state was like that of an earnest poor young man with great hopes, the new state will be that of the spendthrift, whose fortune has gone but whose expensive habits remain. Then will come the time of great struggle for Niagara by all the civilised nations of the earth; the water power of the West of Ireland will form a new centre of civilisation, as will the hills of Switzerland and all places of high tide round the coasts of the world. Then will be the time when men will try to utilise the stores of energy which now seem to be insignificant or hopelessly out of our reach: the direct radiation from the sun or the internal heat of the earth.

I am sure that the mind of no engineer ought ever to be quite free from this incubus—that **we are wasting our coal** with enormous rapidity: that a heat engine is essentially uneconomical. But this book is altogether about heat engines, and when in future I shall speak of the economy of a steam engine, I shall compare it—not with that of the perfect engine about which we know so much, but of which not one cheap specimen has yet been made, and not even with the most perfect heat engine imaginable—but with the perfect steam engine.

I am about to speak of the steam engine as it is—not even as I hope and imagine that it may become before it finally disappears. I shall speak of our best engines which act by reciprocating motion with cylinders and pistons, and in much the same sort of way whether we see them of many thousands of horse-power, driving our largest and fleetest ships, or whether they are of the smallest size, driving a few printing presses.

9. There is one part of my subject which must be left out: I shall speak in Chap. XXIX. of the **balancing of engines,** but I shall not be able to say much about the effects of want of balance. The study of the steam engine is really a branch of applied mechanics

and of heat. The study of vibration is also a branch of applied mechanics, but it is such a different branch that it goes usually under another name—sound or acoustics; its special study in regard to steam engine effects is so little advanced that I shall do my best to avoid mentioning it in the body of my book. In fact, I must content myself with the following general observations on the subject.

In Great Britain an annoying defect may remain unreformed for a century, but let it be called a **nuisance** by a chancery court and reform is very rapid. Large steam engines are now working in towns—not merely in the slums, but in the districts inhabited by rich people. We are first told that really we must produce no smoke, and instantly we use mechanical stokers or better grates and flues, and we refrain from forcing the fires, and get rid of smoke, although for a hundred years every engineer has declared the thing impossible. There is a vast difference between being asked to try to get rid of a nuisance and being told by the policeman that we must stop working if we create a nuisance. We find it necessary to use non-condensing engines in towns because condensation water is expensive; and of course our blast pipe becomes an organ-pipe nuisance; we find that all window frames within half a mile are really microphones—we have remedied this defect of our engines because the only alternative was to stop working.

There is a defect that is put up with in locomotives and in ships which is ever so much worse in a large town, and it has been declared to be a nuisance. Consequently every young station engineer has already acquired an astonishing amount of cunning in diagnosing it and mitigating its effects. It is the vibration produced by reciprocating engines. Of course the only real remedy is the use of a steam or gas turbine, sure to be applied in the long run; but capital has given momentum in the direction of reciprocating engine manufacture, and a complete change towards turbine manufacture must be slow.

Now, in the old days of slow moving engines, the vibrations due to masses moving with accelerations were not important. The vibratory forces are quadrupled when the speeds are doubled, and compact engines must run at high speeds: hence our troubles.

We notice that rotating masses may be perfectly balanced quite easily. But it is a very different thing with reciprocating masses: to balance them needs careful study, and in many cases it seems almost impossible. I have stood on the frames, or rested my teeth against a pencil touching the frames of the best balanced

engines now in the market, and could not detect any vibration; and yet when two, three, or more such engines are working in one station, their slight effects coalesce and there may be very considerable vibration of the ground. Indeed, it may be considerable in one part of the station and hardly noticeable in another part. Again, I have examined sets of flats in a large mansion near a central station, using my "tromometer," which is very sensitive; I have gone from room to room, getting small indications of motion, and I have found that one room was in considerable vibration when its surrounding neighbours were quite quiet.

The student of acoustics does not need to be told that this room was really accidentally tuned to the vibration, and just as one string of a pianoforte will respond to a suitable faint note, just as a ship will roll dangerously if the waves are in tune with it, so this room responds to the faint impulses produced by distant engines.

A householder lays his complaint: the flowers on his dining-table are quivering always; the glass and metal ornaments are always rattling. The cunning young station engineer comes to inspect the quivering room; he says nothing at first; he goes about observing, touching, listening, and he finds some opportunity of slyly moving the heavy piano. No, he declares, he feels no vibration. Curiously enough, the complainer also feels none, nor perhaps is he likely to do so until he moves that piano exactly into the same spot again.[1]

When vibratory impulses act upon a thing, we speak of its forced vibration and also of the natural vibration which it has of its own. Its forced vibration will be small or great, depending upon whether the frequency of the forced vibration is far different from or is nearly equal to the natural frequency.

Young engineers, spurred by necessity—the mother of all reform—know a great deal: they would know ever so much more if they studied acoustics a little, and more particularly if they studied the simpler parts of the mathematics of vibration. The engineer who is a good mathematician will study Lord Rayleigh's *Theory of Sound*. I believe that a study of my own books *The Calculus for Engineers* and *Applied Mechanics* will give to the observant young engineer the sort of mathematical knowledge that he wants, and he will be fairly well fitted to fight the new nuisance if he adds a knowledge of some such book as Tyndall's *Sound*.

[1] It is interesting to study the vibrations induced in a rough model of a ship suspended by springs by model engines placed on it in various positions. We ought to be able to balance the engines more or less, and to change their sequence. The effect of synchronism of the engine periods and the natural vibration of the ship, the positions of the nodal points, &c., can only be studied in this way.

When the pitching, rocking, and tugging vibrations of a locomotive pass along a train, nobody complains; everybody feels that discomfort is part of what he has paid for. The railway shareholders pay a larger coal bill, and find it impossible to exceed certain speeds, that is all. When for every instant during the twenty-four hours, one's state room on a passenger steamer is shaking, not merely on account of the racing of the screw, but on account of the badly balanced engines, as no chancery court has declared the thing a nuisance, we expect to find this vibration on every ship that floats. Before the time of Charles the Second people did not know how miserable they ought to feel with unlighted streets; and folk who live with pigs in mud cabins are proverbially oblivious of their misery.

10. Having now vented all my anger upon the defects of the steam engine, it becomes my business to incite students to the study of it.

It is my intention to make this elementary account of our subject one which will be really useful to the practical engineer. But I warn my reader that he must do some work; he must try to get exact ideas. It is all very well for men and women who trifle with a subject and call it study, to frankly skip the dry part (or worse, to pretend to understand it), but the practical engineer knows that his ideas must become exact, **he must be able to make calculations.** His life is a war with Nature; he wants to coerce Nature in all sorts of ways. The careful training in calculation, what is it but a sharpening of one's weapons? I suppose that in the old days it was rather a nuisance to have to mend one's armour, to sharpen one's sword, to mend the spring of one's cross-bow. Preparatory work of this kind must always have been a bore; but the man who neglected it got knocked on the head. I must therefore ask the student to work steadily through the examples in arithmetical and graphical computation on mechanical and heat energy and to begin these at once. The more difficult exercises are in smaller type.

CHAPTER II.

THE COMMONEST FORM OF STEAM ENGINE.

11. It is difficult at first to take in the idea that fluids act on the solid bodies which they touch, with great force. The atmosphere through which we move so easily, presses with a force of 15 lb.[1] on every square inch of our bodies; but there is a balancing pressure from the inside of our bodies, and so we do not feel the pressure as a load. A boy who experiments with a sucker, and who uses more scientific methods of exhausting the air from a space, so that the pressure due to the outside atmosphere becomes more evident in various ways, will gradually get to know something about **the pressure of fluids**. Lectures and reading teach almost nothing, unless we also see and make experiments.

I have sometimes closed a very small strong vessel with water in it, put it over a gas flame, and stood at a distance to watch, or rather, to hear it explode, when the pressure of the steam became great enough. It is said that the great force which steam may exert became known to Watt through the behaviour of his mother's kettle. I doubt this. Steam escapes too easily from a kettle. Even neglected boilers fail to explode in ninety-five cases out of one hundred, because even carefully riveted joints give way and leak rapidly.

When water is boiled in a kettle, its temperature is always about 100° C. (or 212° F.), because it is under atmospheric pressure. Giving more heat to the water does not raise its temperature, it only causes some more water to boil away. Up a mountain its temperature is less, because the atmospheric pressure is less; and

[1] Really 14·7 lb. per square inch, or 2,116 lb. per square foot, is what we take to be the standard pressure of our atmosphere. The real pressure of the atmosphere varies from day to day.

the lowered temperature of boiling water is often noted by travellers as indicating the height of a mountain.

When we use a strong kettle or boiler which is closed up, we may get very much higher temperatures and pressures. When we know the temperature we know the pressure. Students will do well to try this for themselves in the way described in Art. 179. Boilers (see Chap. XI.) are so constructed that (1) they may be able to withstand the very great pressures usually employed;[1] (2) large quantities of coal may be rapidly and completely burnt in them, its heat being, to as great an extent as possible, given to the water. We particularly want from a boiler **steam which is dry**; it must contain as little water as possible (a cloud consists of drops of water, so does the visible stuff which has come from the spout of a kettle; we want our steam to be transparent, to have no condensed steam present). There are drops of water in the steam of the boiler, because of the spray due to the violent ebullition which is always going on;[2] this we call "priming," and by careful ways of taking the steam into the steam-pipe, we greatly get rid of it. Again, unless the steam-pipe from the boiler to the engine is well covered with a non-conducting covering, some steam will condense. The electric companies by better clothing their steam-pipes have greatly diminished their coal consumption. We often give the condensed steam a chance of settling by passing it through a **separator** (Figs. 3 and 4); but do what we will, we find that the steam reaching the engine contains some water. The steam supply to the engine is controlled by the stop or regulation valve, the hand wheel of which may be turned by the engine driver. There is also in many engines a throttle valve, which is kept closing or opening more or less by the governor of the engine. The governor admits more steam if the engine is going too slowly, and closes off the steam a little if the engine is going too quickly.

Many of the small engines on board ship are supplied with steam from the main boiler through reducing valves. Steam from the Belleville boiler is always supplied to engines after a reduction of about 60 lbs. per square inch in pressure by a reducing valve to dry it.

[1] Pressures of 250 lbs. to the square inch are not yet common, but pressures of 200 in compound and triple expansion engines are quite common. Even pressures so great as 165 have long been common in locomotives, and yet in these there is usually no compounding. Single expansion engines seldom use a higher pressure than 110 lbs. per square inch.

[2] A pound of low-pressure steam is of very great volume compared with a pound of high-pressure steam; hence violent ebullition and priming are more usually found in low-pressure boilers. But it is for this very reason that artificial help to the circulation is more needed in high-pressure boilers.

In passing through valves, steam loses pressure, because of friction, but it has a tendency to become drier. This tendency to superheat is not very great, however, under ordinary circumstances. Instead of relying upon throttling, it is far better to let a part of the steam-pipe be kept heated, either by the hot furnace gases or by a special furnace. In non-condensing

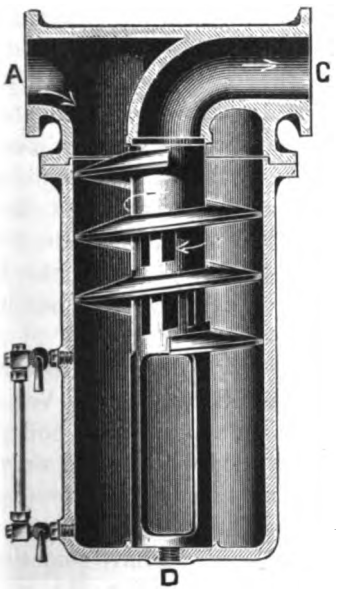

FIG. 3.—SEPARATOR.

Wet steam enters at A and dry steam leaves at C. Centrifugal force assists in the separation, and the water collects in lower part, and is let out at D. The gauge glass shows how much water is present.

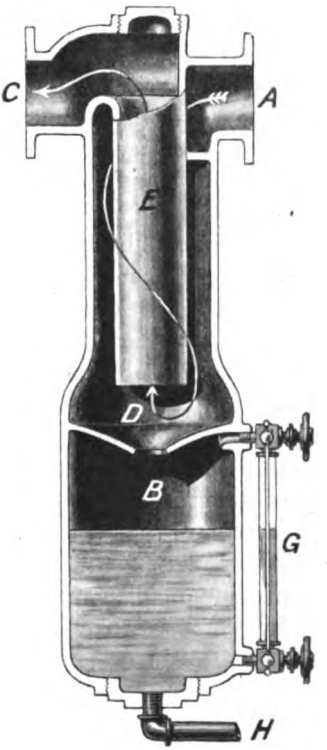

FIG. 4.—SEPARATOR.

Wet steam enters at A and travels round the central pipe E, the water leaving by centrifugal force, and the dry steam escaping from D through the central pipe E. The water collects in the lower part B.

Separators are sometimes provided with floats which rise when the accumulation of water is too great, and open a valve which lets the water escape. Ordinary **steam traps** act in much the same way.

engines where we do not mind if air and other gases get mixed with the steam, it is better to have a gas jet burning inside the steam-pipe, being supplied with air and gas under pressure. When by any means we not only remove all water from the steam, but raise the steam to a higher temperature still, we say that it is **superheated.**

Many men have the notion that if one part in ten of the stuff entering a steam engine is water, it only means a lost effect of

10 per cent. This is very wrong. He might as well say that if one man among ten sailors entering a ship has cholera, it only means a loss of the labour of one man in ten. The fact is, the condensation and consequent waste going on in a steam engine cylinder would hardly have a chance of beginning if the entering steam were dry. The formation of a skin of water on the metal inside the cylinder is of enormous importance in causing more steam to condense there, and so destroying the efficiency of the steam engine (see Chap. XXXV.). Anyhow, it is very important that the supply of steam to an engine should be dry, and even that it should be more than just dry, that is, superheated. It will be noticed also in all the figures of the best cylinders in this book that not only are they well covered with non-conducting felt and wood, but there is also a well-drained steam jacket. This jacket communicates freely with the boiler, and it gives so much heat to the outside of the cylinder that no skin of water is likely to form itself on the inside surface. In three-cylinder engines all the cylinders and receivers are jacketed; the student will see that if all the jacket steam comes from the boiler, the low pressure cylinders have a better chance of keeping dry than the high pressure.

I feel sure that it is very important to show a beginner by direct experiment how great may be the force exerted by steam. Various experiments may be suggested. If there is an experimental boiler in the laboratory with a large safety valve, loaded with a dead weight, (as in Fig. 181), or even by a weight acting through a lever (as in Fig. 182), the student may get to know of these great forces by noting the force required to keep a valve closed. I have sometimes used a piece of apparatus like a small Bull engine (Fig. 21), lifting a weight.

12. Ordinary Steam Engine.—Steam engines have been of many forms, but the simplest, the direct-acting form, has survived the others. Forty years ago this sort of engine was thought unsuitable where economy of energy was important. It was used in locomotives because it was simple in construction, and not liable to get out of order. It was getting to be used in ships, partly for the same reason, but mainly because it occupied less space than the then preferable beam engines, with their parallel motions and other complicated contrivances for lessening frictional and other losses. But when a large factory engine was required, nobody dreamt of using a direct-acting engine. Later when, at length, it was recognised that there were far more serious losses in engines than those saved by parallel motions, direct-acting engines were used even in factories,

but valve motions worked by tappets or corliss or other complicated gears were used with them, and the locomotive type of engine was still scornfully thought to be suited only for very small powers. Now-a-days it is recognised that the simple construction of the locomotive engine and the simple locomotive slide valve motion may be employed in the very largest engines, where we aim at the very highest economy, and hence it is that the **old despised type of engine** is not only the easiest to describe, but the most important for students to understand.

13. Fig. 5 shows a small stationary engine, whose **cast-iron cylinder** A B is closed at the ends by castings E and F bolted on. It has no steam jacket, and the lagging of felt and wood which is used for clothing it and keeping it warm is not shown. This cylinder is very carefully bored out to be exactly circular in section. We are so particular about this that if a large cylinder is to lie horizontally, we bore it in the horizontal position, and if it is to be vertical, we bore it in the vertical position. The boring of a large cylinder in the shops ought to be observed by a student, who must note not only the mechanical arrangement of cylinder and boring bar, but also the speed of cut and the rates of feed both in roughing and finishing.

The shapes of some cylinders are shown in other figures.

There are two flat openings or ports at the ends, hardly visible in the figure, through which steam may be admitted or exhausted. In our engine the steam exhausts or rushes off when released, to the atmosphere, because Figs. 5 or 15 is evidently what is called a non-condensing engine. In a condensing engine the exhaust is to a condenser, a vessel kept in a cold and nearly vacuous condition. In many cylinders there is only one port for each end, see C and C in Fig. 5, whereas in others, such as Fig. 22, the steam is admitted and exhausted from each end by separate ports, called the admission and the exhaust ports. This is much better, because the exhaust steam is much lower in temperature than the entering steam, and the entering steam tends to condense on the surface metal of these passages, a much more serious matter than it may seem to be. What we call the valve motion is simply the contrivance which automatically admits steam into the cylinder on one or the other side of the piston at proper times, allowing it to escape at proper times. In Fig. 5 no valve motion is shown. The student must assume that there is a boiler which generates high pressure steam as fast as it is needed, and that this steam is brought through a supply pipe to the steam chest or valve chest,

being admitted to either end of the cylinder through some kind of valve.

14. The piston shown in Fig. 51 is much thicker and more clumsy than is usual in larger specimens of engine. Other forms are

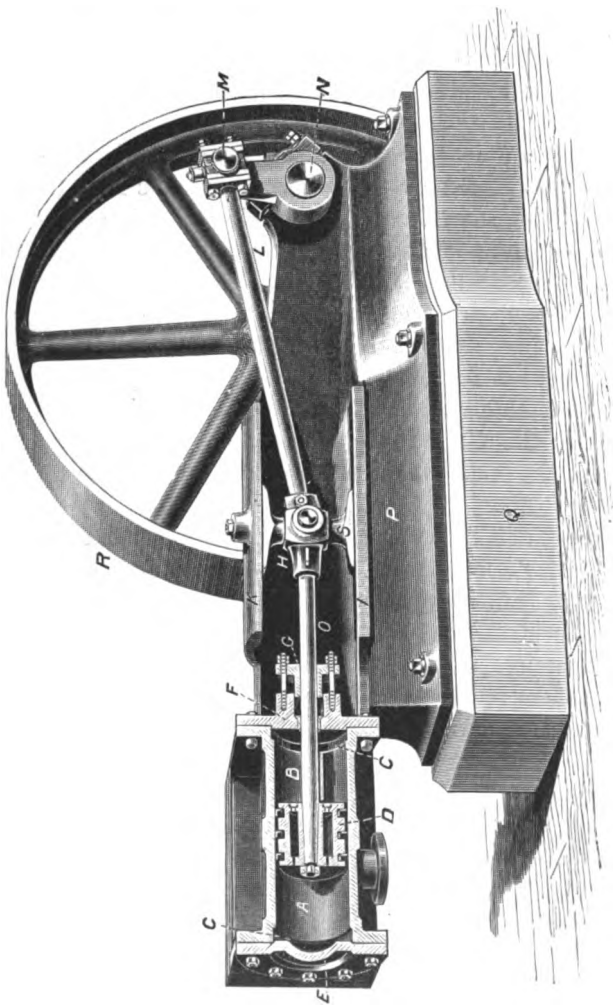

FIG. 5.—HORIZONTAL STEAM ENGINE.

shown in our figures, and there also we see how the piston is made steam-tight. What is wanted is that if there is high pressure steam, say in A, Fig. 5, and mere exhaust pressure in B, the steam from A shall not pass the piston into B. The cast-iron block, which is the main portion of the piston, is a very slack fit for the cylinder; three

cast-iron packing rings are shown upon it. These split rings are sprung into grooves in the block, and are always trying to get larger and press gently outwards all round against the cylinder's surface so as to create as little friction as possible, and yet to remain steam-tight. In Fig. 23 there are only two rings, and it will be seen that, what with their nice fitting in the grooves, and the places of split being far apart, steam has difficulty in getting past the piston. In large pistons like Fig. 6, the springiness of the rings is not alone relied upon. Notice the various ways that are taken by different makers to produce the necessary steam-tightness without too much friction.[1] In spite of all efforts even in the most elaborate construction of pistons, such as are shown in Figs. 6, 30, 31, &c., there can be no doubt that considerable leakage takes place. If the engine is held fast in a particular position, and if high-pressure steam is admitted to one end and the other is open to the exhaust, there is such good packing of the piston in good engines that the leakage is so small as to be very difficult to measure; but unfortunately there can be no doubt of a pretty considerable leakage past the piston when it is in motion. It seems that the leak is a leak of water; the steam condenses, comes past the piston as water, and evaporates on the other side, and this state of things is mainly due to the piston in its motion passing over parts of the cylinder metal which are sometimes hot, sometimes cold.

The student will notice that there are many shapes of piston. The conical shape of body of Fig. 6 is adopted for large pistons as being thought better for strength and lightness. Later on it will be seen that lightness is a very necessary quality in the moving parts of engines. As to the strength, let the student think of the great forces due to steam acting on a piston. Even a locomotive piston such as Fig. 59 is often 18 inches in diameter. Consider one only 12 inches in diameter. Let the pressure on the side to which steam is admitted be only 100 lbs. per square inch in excess of what is on the exhaust side. The total resultant force in the direction of motion of the piston is 100 lbs. × the area of a circle 12 inches diameter, or 100 × 112, or 11,200 lbs. A total force of 5 tons! A student who has experimented with a model of the Bull engine shown in Fig. 21, may perhaps understand how great such a force is and the significance of its greatness, and yet our piston is small

[1] I have proved in my book on Applied Mechanics, that the usual method of construction of piston rings is quite wrong. The ring ought to be cut, clamped smaller, and in this condition turned to the size of the cylinder, and if so made it will press uniformly all round, not otherwise.

and the steam pressure moderate. I have known men who could lift 400 lbs. with two hands. I can readily lift a man (with both hands) whose weight is 150 lbs. Think of a force which is 75 times as great as this. And notice that the steam will exert it even when the piston moves very rapidly, if the boiler will only generate steam fast enough and if the pipes and opening into the cylinder are large enough. The piston rod *R* is very firmly fastened to the piston. The nature of this fastening will be gathered from Figs. 6 and 36. Every one knows how apt some part of one's bicycle used to get loose in spite of the great experience of manufacturers. Have you ever been troubled with a shoe-tie getting loose? I have been tormented with the tying of the load of a packhorse getting loose. All kinds of lock-nuts, and locking arrangements have been invented because a fastening is so apt to get loose, even when the load on it is not great, if the load keeps altering. Now the fastening of the piston and its rod has to stand pushes and pulls each of 5 tons, altering twice or many more times every second, sometimes as in marine engines for months, and it must not get loose. Therefore you must treat with great respect the style of fastening which has been found to stand such trials. Figs. 6 and 36 show some kinds of fastening which are found to last well.[1]

In most cases before the piston has travelled over the whole stroke the admission of steam is stopped; the steam already admitted must expand and its pressure gets less than it was originally; but there is nothing very wrong just now in supposing that the steam is admitted freely at 100 lbs. pressure to the end of the stroke. At or a little before the end of the stroke it is allowed to escape to the exhaust, and high pressure steam is admitted on the B side of the piston, and consequently there is a force of 5 tons (leaving the small area of the piston rod out of the calculation) forcing the piston back again.

[1] British engineers deserve their great success. Their work is tested not merely by an appearance of goodness such as a fraudulent plumber is quite able to give to the worst of jobs. Good work is the result of honest earnest effort, such as has never before been exercised in any profession in the whole history of the world. Users of the Willans engines tell me that they will run for many months continuously with no other care than proper lubrication. Mr. Crompton told me this morning (July, 1898), that an engine had just been opened at Kensington for the first time after a 21 months' run (during lighting hours), and it was found not only to need no renewal of any part, but no sign of wear could be detected anywhere, and the engine was started without anything being done to it. Surely this reputation of English engineering is worth maintaining. It may be in the power of foreigners to obtain more orders for ships and engines, but it is our boast that when work is ordered it is well done.

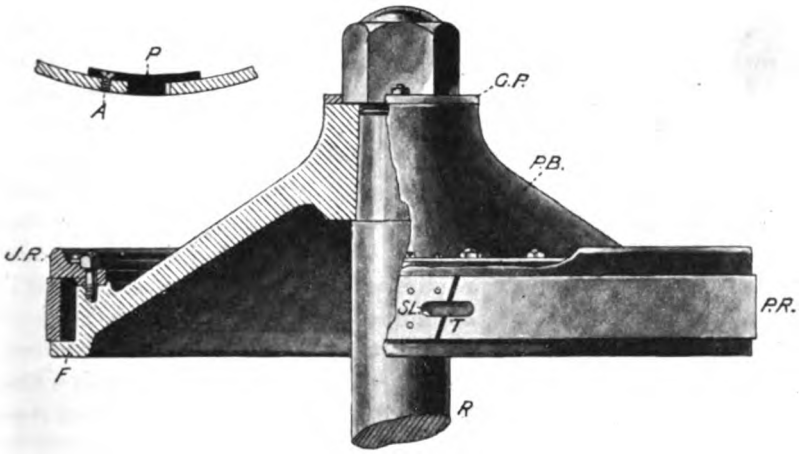

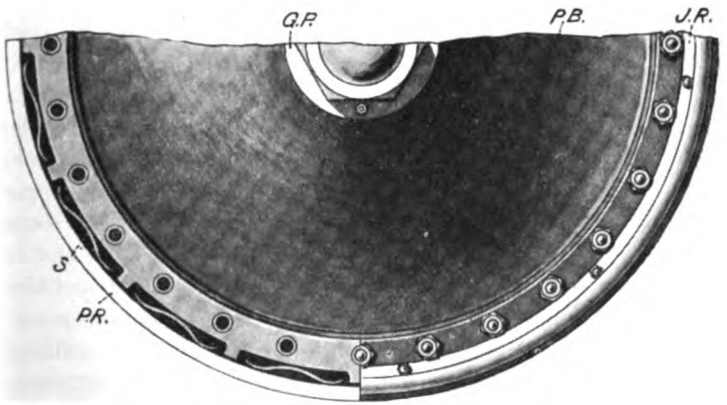

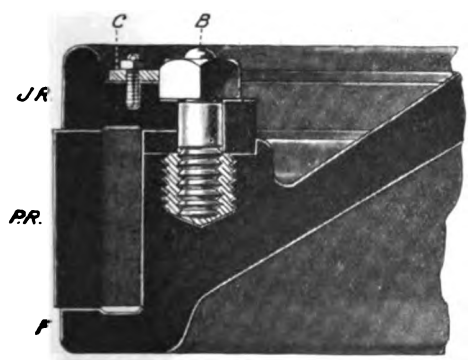

FIG. 6.—PISTON.

Marine piston, of conical cast steel body P.B., with single packing ring P.R, which is pressed outwards by coach springs S between junk ring J.R. and flange F. The surfaces between ring and junk ring and flange are steam tight. Spiral springs are often used instead of coach springs.

The ring C secured by small nuts and split pins locks all the nuts.

The gun metal tongue piece P.T. has a set screw A fastening it on one side. G.P. locks the great nut, and is itself secured by studs with square necks and split pins. All the studs B are in gun metal.

In horizontal engines solid "cod pieces" are substituted for springs for a quarter of the circumference, at the bottom of the piston. Marine pistons are often treated similarly on account of the vessel rolling.

15. Consider then this force of 5 tons alternately pushing and pulling the piston rod, changing 100 or possibly 400 times per minute, the whole mass of piston and rod starting, getting up speed, stopping, and coming back again in the same fashion with great rapidity, and you will see why it is that we have a very powerful agent to deal with. The piston must be strong, its fastening to the piston rod must be strong, and the rod itself must be strong. The rod passes steam tight through the cylinder end *F*, because of the steam tight packing of the stuffing box and gland *G*. In small engines **the stuffing box** as Fig. 7 is filled with rope yarn, or asbestos rope, which the studs and nuts of the gland *G* keep squeezing so that it presses gently out against the rod. Sometimes in such a case a very thin sheet of brass or copper is between the packing and the rod, and this keeps the rod polished.

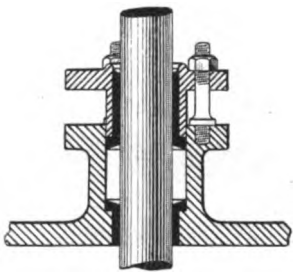

FIG. 7.—A COMMON FORM OF GLAND AND STUFFING BOX.

In the figures we see in how many different ways different manufacturers pack their stuffing boxes. Thus, for example, in Fig. 9 we have one form of metallic packing used in very large marine engines. *HH* are half rings of white metal squeezed between bronze rings *J*, a number of springs in the frame *K* at the end maintaining the pressure. The white metal is squeezed against the rod *A* keeping it steam tight. The gland *F* is forced by four studs and nuts *CC* to compress ordinary packing of asbestos in the stuffing box *FG*, and that these may never be tightened up unequally, each nut has a spur pinion as part of it, gearing on a central spur ring; turning one nut means turning all four. *F*, *G*, and the bush at the inside are bronze. Ordinary stuffing boxes have merely a brass neck bush at one end and the gland is either of brass or cast-iron, faced with brass (see Fig. 7). Packing for pump rods, &c., is of gasket (interwoven strands of hemp and cotton) or an elastic core of india-rubber surrounded by canvas or asbestos. For steam rods asbestos rope is generally used.

16. We see then that the piston rod is pushed and pulled alternately with great forces, and that by means of the connecting rod *L* and the crank *MN* the crank shaft is kept rotating. The fly-wheel *R* keyed upon the crank shaft keeps the motion steady. If any student has difficulty in seeing how the reciprocating motion of the piston rod and cross head *H* are converted into rotatory motion by a connecting

rod and crank, let him examine any sewing machine, or foot lathe, or an ordinary cycle. He will also learn from these things the steadying effect of the fly-wheel.

The piston and its rod move with a motion of mere translation. That is, every point has a path of the same length as and parallel to that of any other point.

This is what we mean by our rough and ready statement, "the piston moves in a straight line." It is very important that the end of the rod should be guided so as to move in a straight line and so it terminates in *H* **the cross head.** The nature of the guidance is evident in Figs. 5, 15, 43, 47, &c., which show many forms of slides and slippers fastened to ends of piston rods, also of their guides. The arrangement differs in different forms of engine and must be studied in connection with the shape of the frame. Notice in this example, Fig. 5, how the cylinder is fastened to the frame *P*, and the shape of the guides *KI*. The cross head is

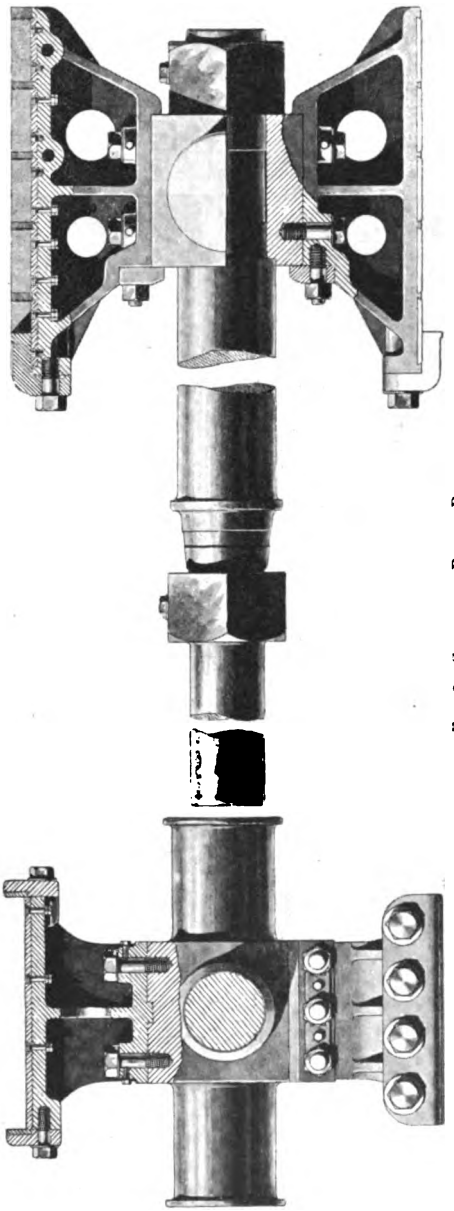

FIG. 8.—SLIDE AND PISTON ROD.

This slide with gudgeon pin,—to work on small forked end of connecting rod,—is suitable for open guides. It shows detachable slippers carrying white metal for both surfaces.
A closed slide has its *ahead* bearing surface only important. The two stoppers are shown by mistake.

a strong pin connecting *H* and the end of the connecting rod *HM*, at the other end being the crank pin *M*, the crank *MN* being fixed on the revolving crank shaft on which the fly-wheel *R* is keyed.

17. The nature of the reciprocating motion of *H* and the piston when *M* revolves uniformly is well known. It is evidently necessary for *HM* to keep as nearly constant in length as possible, and the student must ask himself these questions: 1. The ends of **the connecting rod** must fit the pins at *H* and *M* always nicely, but there must be wear; how are the end fittings adjusted so that the distance between the pins keeps constant? 2. The forces at these pins alter quickly in high speed engines; in fact, blows may be said to take place; how are the keys, cotters, and other fittings of the ends prevented from shaking loose?

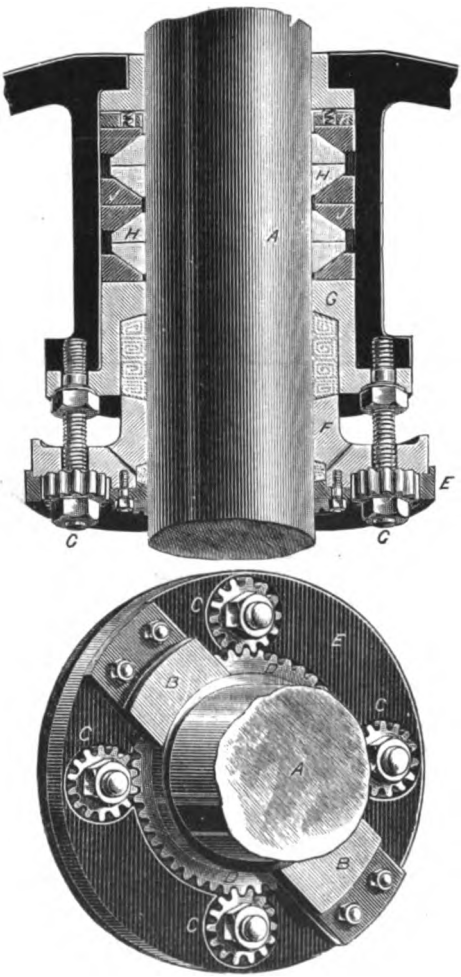

FIG. 9.—MARINE ENGINE. GLAND AND STUFFING BOX.

The figures tell this story themselves. Thus Fig. 10 shows half in section and half in elevation the end of a rod, fitting the steel crank pin *A*. The gun-metal "brasses" or steps *BC*, are kept tight on the pin by the key *H* and cotter *G*, which fasten the strap *SF* to the butt *E*. This kind of rod used to be common; it is not suited to withstand the loosening action which occurs in modern high speed engines.

Now look at Fig. 42 or the rod of Fig. 11, whose "big end" fits the crank pin and whose small forked or "gudgeon" end, with two

brasses of gun-metal, fits the cross head with its slipper blocks shown in Fig. 8 upon the piston rod end. Notice how the crank pin brasses, cylindric out and in, are lined with white metal because of the excessive friction, and how they may be adjusted by filing the distance pieces. Notice how the *cap* and *jaw* are fastened together. Bolts are thinned down to have a less section than at the screw thread, except where the bearing surfaces are; they stretch therefore instead of fracturing at the thread. Spare brasses are usually carried on ships, so that if heating has occurred and the white metal has "run" it may be replaced. It is as common to shrink the end of the rod upon the pin or gudgeon, and the head of the piston rod is forged, part of the piston rod becoming a slipper slide whose base

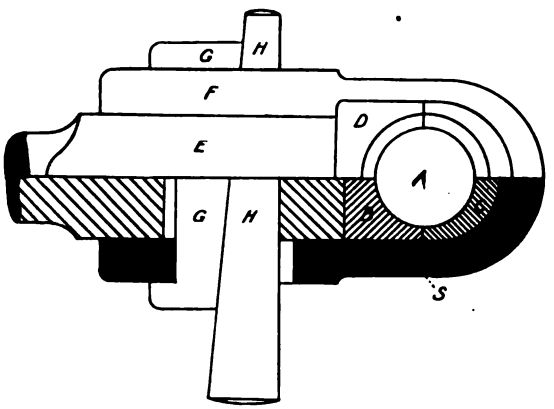

FIG. 10.—CONNECTING ROD END. For slow speeds, with steel loose strap FS, held by gib G and cotter H.

carries a gun-metal slipper faced with white metal. A slide often has a guide only on one side of it. The hollow space in the guide has cold water circulating in it for coolness in many large marine engines.

18. In small engines we have all sorts of **frames and guides.** The frame, all one casting, of which four views are shown in Fig. 43, has bored guides *BG*. There are two bearings, *BB*, on the frame, for the crank shaft, and the fly-wheel would be overhung, as shown in Fig. 15. This form may be used vertically as a wall engine. Fig. 47 shows the "girder-frame" of a larger engine (up to pistons of 12″ diameter) also with bored guides. Fig. 47 shows the cast iron frame of a large vertical engine with two flat guides.

The careful student will notice if he examines old types of engines that an important change has been going on in the arrangement of

metal in the frames of engines, so that by its mere inertia it shall tend better to prevent vibration of the ground, and also that the whole frame shall act rather as a tie rod or a strut than as a bracket.

19. The crank shaft *N* and crank with the crank pin *M*, are shown in Fig. 5. The pedestals (or pillow blocks) are very much like pedestals of ordinary shafting, except in this—the loads on ordinary shafting are usually merely vertical loads. On a crank shaft there are horizontal forces, due to the pushing and pulling forces of the connecting rod, and consequently the cap is not always placed vertically above the journal.

In the figure I show an over-hung crank, one bearing of the shaft is on the frame, the other detached from the frame would be supported beyond the fly-wheel. Fig. 15 shows a crank between the two bearings, the fly-wheel being over-hung. The reason why the part away from the crank pin is often made massive is because a lop-sided rotating thing is **out of balance.** Let a student illustrate this for himself with the following piece of apparatus. Arrange a disc of wood which may be revolved at a high speed, and let there be a piece of lead fastened to it somewhere, so that the centre of gravity of the rotating part is not in the axis of rotation. It will be found that the frame and indeed the table on which it rests, gets into a state of vibration, and it is evident that this is due to the unbalanced centrifugal force of the lead. Now place an equal piece of lead exactly opposite to the first, and just as far away from the axis, and we find on rotating the disc that there is balance. Such experiments as this are very instructive. We can make a small body balance a much larger one by placing it further away from the axis. There is much more than this to be said about the subject of balancing. A rotating mass is not in balance unless its centre of gravity is in the axis of rotation, but this is not always the sufficient condition for balance, and students must refer to Chap. XXIX. They will there find that rotating masses may be perfectly balanced; that is, there need be no vibratory forces acting in the framework of the machine. Again, it is found that an engine like those shown in Figs. 5 or 15, sets the engine-bed and foundations and the ground in vibration because of the reciprocating motion of some of its parts. It is found that we get a fair approximation to the actual state of things if we suppose the piston, piston rod, cross head, and half connecting rod to move with a reciprocating motion in the centre line of the engine; these I shall call the reciprocating part; the forces on the framework due to this can only be balanced by another reciprocating part moving exactly in the opposite way. It is

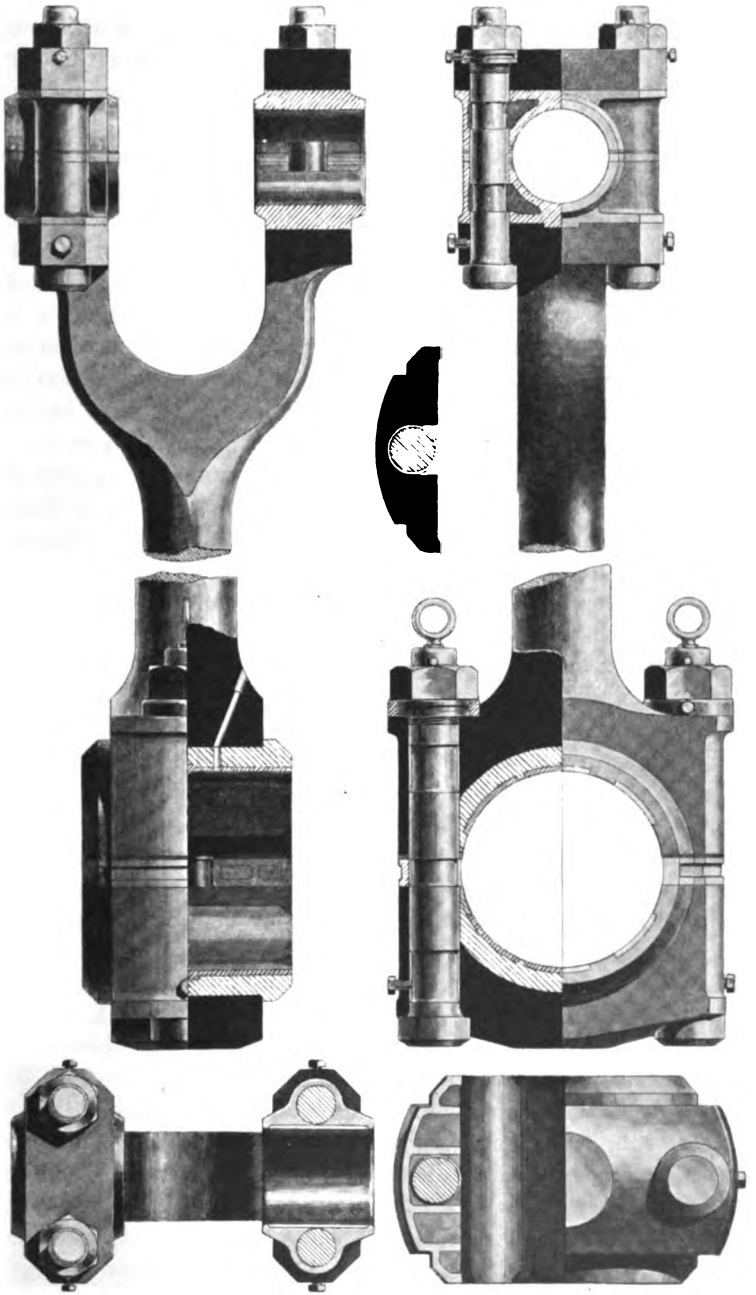

FIG. 11.—STRONGEST FORM OF MARINE ENGINE CONNECTING ROD.

very seldom indeed that we find the reciprocating parts of an engine balanced, and this is why in certain parts of London the electric light companies have been compelled to replace reciprocating engines by steam turbines. A rotating part may be made to balance a reciprocating part, but this introduces reciprocating forces in a direction at right angles to the first. This is how the endlong forces are balanced in a locomotive. There are up and down or pitching forces unbalanced in the best locomotives, but the endlong forces are balanced, and these are more important than the others, because when they are not balanced the locomotive tugs at the train instead of drawing it steadily. A very badly-balanced locomotive burns so much more coal per train mile that even the ordinary poor sort of balancing is of considerable importance. The bad balancing of the engines on a torpedo catcher or any other modern swift vessel greatly aggravates the annoyance due to vibrations produced in other ways, as for example, from the propeller (because it has not many blades) or from the action of the sea upon the hull of the vessel.

20. Knocking or Backlash.—It will be noticed that however good may be the fit of a brass to a pin, when the forces between them are suddenly reversed, there is a blow; this is of course greatly increased by bad fitting, as when brasses get worn. Hence it is worth while sacrificing other advantages if by so doing we can be certain that the forces, however they may vary, never change in direction; that is, if it is invariably one side of a brass which is always acting on its pin or journal. It will be seen in Art. 65, that when steam is only allowed to act on one side of a piston, and if there is plenty of cushioning, the piston rod may never be required to exert a pull; it may always be kept exerting a pushing force at every part of the revolution of the engine, and it is mainly for this reason that single-acting engines are in use. When a single-acting engine is vertical as the Willans engine (Art. 236) for example, the mere weight of the moving part is important in preventing backlash. In this engine, however, the reciprocating forces are so great that ordinary cushioning has to be supplemented by an air-cushion.

21. It is to be noticed that we cannot be absolutely certain of the length of the connecting rod; also, other parts of the engine alter slightly in length, because of unequal expansion by heat, and hence it is necessary to allow of a little **clearance** at both ends of the cylinder. The actual volume of the clearance, that is, the volume which must be filled by fresh steam at the very end of the stroke, may sometimes be approximated to if we have the working drawings of the engine; but I prefer to measure it by placing the engine in

the dead point position, to fill up the clearance space with water, and then to run off this water and measure it.

22. It is to be noticed that the steam acts not only on the piston, but also on the end of the cylinder. The cylinder is bolted to the engine-bed, and this is held down to concrete or brick-work or masonry foundations. Great stiffness is needed in these parts to withstand the effects of such rapidly reversed great forces. In marine engines the power is transmitted by the crank shaft to the propeller. In locomotives it is transmitted by the crank shaft, and through the driving wheels to the places where these touch the rails. The friction must exceed the pulling force, else there will be slipping. In factory engines the fly-wheel is often a great spur wheel, driving a smaller mortise spur wheel. In this case the fly-wheel is always built up of many parts, keyed and bolted together, because a single casting so large would not be true enough. In the smaller factory engines the fly-wheel is used as a drum, from whose rim the power is taken off by a belt or by ropes, as shown in Figs. 15 or 144.

Many special machines, such as dynamo electric machines, are **driven direct;** the engine and dynamo are on the same bed-plate, and the four sets of brasses for the four bearings (two for the engine and two for the dynamo) are bored out at one operation, great care being taken to get them exactly in line.

23. Fig. 12 shows a skeleton drawing of Figs. 5 or 15. If a student thinks for himself he will see that if P is pushed in the direction of the arrows, the cylinder is pushed back. This is why the cylinder and the crank shaft must be firmly held on one frame-work or engine-bed. Of course if the bed were to yield in its length quite readily, there would be no turning of the shaft. The skeleton drawing brings home to us also the fact that the end of the piston rod or cross head H ought to be guided; for the pushing force of five tons in P is resisted by the push in C, and it is obvious that guides for H are needed to exercise an upward guiding force, such as is shown by the arrow head. The slide is **pushed downward** on the guide. Now let the student make another skeleton drawing like Fig. 13, which is merely what Fig. 12 becomes when the crank has made half a revolution further. The piston rod is now pulling the slide, and the connecting rod pulls the slide also in its resistance to motion, so that again the force of the guides on the sliding block is upward. Hence if we are sure that the direction of motion shall always be the same, a closed slide with one slipper rubbing on one stout guide may take the place of the two or four guide bars which we see in Figs. 5, 47 or 62. Just as C pushes H, so it

pushes the crank pin K; the push in C multiplied by the perpendicular distance from E to HK is what we call the *turning moment* on the crank shaft.

24. It is of very great importance for a student to study (not so much with mathematical exactitude as to have working notions) this **turning moment** for every position of the piston. It may be done, perhaps, by making many skeleton drawings; but it is far better to have a working sectional model such as is shown in Fig. 101. If there is a workshop available, a student will very readily make a sufficiently good model for himself with a few laths of wood and wood screws. I myself have used with students a large model in which the distance from A to K is 6 feet. It has a connecting rod which

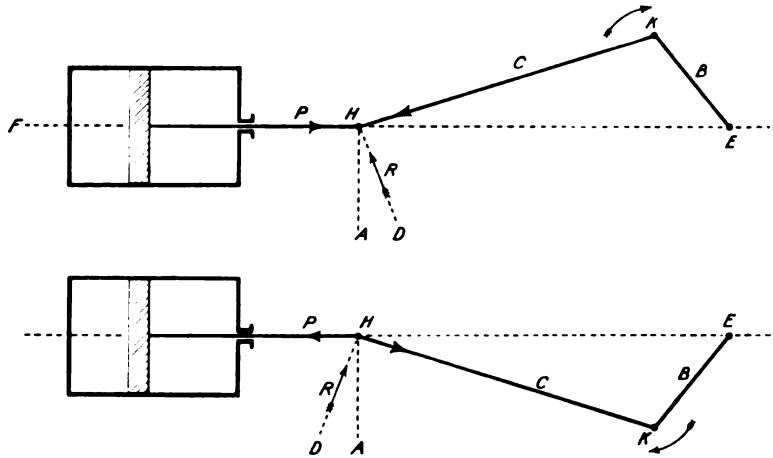

FIGS. 12 AND 13.

may be lengthened, the distance from K to A also being altered; the distance of the piston P from the end of its stroke may be measured with great accuracy, and also the angle turned through by the crank from O O, its *dead point* position. First, we study the mechanism, noting how travel of piston and angle of crank are related to one another (see Art. 67). Second, we study the forces acting in the several parts, and particularly the turning moment on the crank shaft. Third, we notice that the weight of the conducting rod must modify our calculations a little, but not much. Fourth, we notice that the forces must be rather different at one speed of rotation of the shaft from what they are at another, because it requires force to set a body in motion, and to stop it an opposite kind of force. Notice the great difference between this and the previous effect due

to mere weight of connecting rod. It may be said that all this is a mere matter of calculation. Now it is true that we can learn a great deal by mere mathematics, but what we often learn is merely how to pass examinations; it is a student's business to learn to think, and he may be quite sure that he will never really think about or understand the steam engine till he has experimented, observed, and handled either real parts of engines or such a model as I have described.

25. However great the pushing or pulling force on the piston or connecting rod may be, there are two positions, the two ends of the stroke, in which there is no turning moment on the crank shaft. These are the *dead points*, well known to all ladies who work sewing-machines, and to men who work foot lathes or bicycles. And the turning moment varies greatly during a revolution. Hence, to equalise this and also to make sure that we can start an engine from any position whatsoever, it is usual to duplicate everything, there being two engines working the same shaft, their cranks being at right angles, so that when one is at its dead point the other cannot be so. When three cylinders work the same crank shaft their cranks usually make angles of 120° with one another.

Fig. 62 is an example of the **coupled engines** of a locomotive, the cranks being at right angles. Donkey engines used for crane work on board ship have two cranks at right angles and no fly-wheel, so that they may be easily stopped and started from any position. Any person who watches such an engine working must see how important is the steadying function of the fly-wheel of an ordinary engine. Engines in hydraulic power stations are often stopped and started automatically by the rising and falling of the accumulator weight acting on a throttle valve, and this needs coupled engines. Some of our figures show three cranks on the same shaft. Not only do we in these ways get a more uniform turning moment on our shaft, but we find it easier to balance the forces which act on our framing and foundations. This is one reason why triple cylinder engines are now so largely used, but it is not the most important reason.

26. We see that if steam is in A, Fig. 5, at great pressure coming from the boiler, and if the steam has escaped from B to the atmosphere or to a condenser so that the pressure in B is small, the piston is being pushed from left to right and the crank turns in the direction of the hands of a watch. The fly-wheel has great inertia, and so the crank moves beyond the "dead point" position. If now steam is admitted to the B side of the piston and exhausts from the A side, the piston is moved from right to left. We see then that a great

force acts on the piston in the direction of its motion if steam is properly admitted and exhausted to and from the *A* and *B* sides alternately, the crank moving uniformly if the fly-wheel is large enough.

I have said that the pressure is calculated on the cross section of the cylinder, and does not depend upon the mere shape of the surface exposed to the steam. The student ought to be quite sure that this is so. Neglecting friction, due to motion of the fluid (quite negligable here), a fluid presses at right angles everywhere to any surface as shown in Fig. 14. But it will be found that all the lateral pressures balance one another, and the resultant force on the piston is just the same as if it were quite flat. Perhaps this will be the more evident if we imagine the piston, say that of Fig. 14, to be weightless and frictionless, and that steam of the same pressure is admitted on both sides of it. Although one of these is flat and the other is not, we cannot imagine that the piston will tend to move. The proof is given in books on applied mechanics. See also Art. 113.

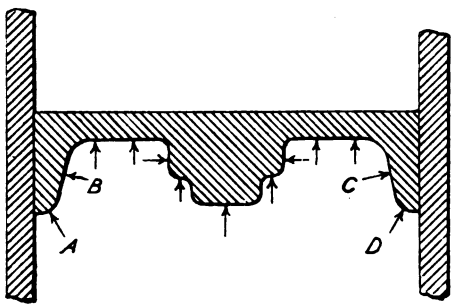

FIG. 14.—PRESSURE ON A PISTON.

27. We have not spoken yet of the effect of the **piston rod.** Let the student work these exercises.

EXERCISE 1. The absolute pressure (pressure above that of a perfect vacuum is said to be absolute) in the space *A*, Fig. 5, is 167 lbs. per square inch, and the absolute pressure in *B* is 17 lbs. per square inch; the cylinder 12 inches in diameter (112 square inches in cross section), and the piston rod is 2¼ inches in diameter (2¼ × 2¼ × ·7854, or 4 square inches in cross section). What is the resultant force on the piston?

Answer. The force on the *A* side is 112 × 167, or 18704 lbs. The force from the *B* side is (112 − 4) × 17, or 1836 lbs. on the piston itself, and if we take the atmospheric pressure outside to be 14·7 lbs. per square inch, as this acts on the piston rod, there is also a force resisting the motion of 4 × 14·7, or 59 lbs., so that the resultant force is 18704 − 1836 − 59, or 16809. Our rough and ready calculation when we neglected the area of the piston rod, gave us 16800 lbs., and so was in error to only a very small extent.

EXERCISE 2. Steam in *B* is at 167 lbs. per square inch, and there is exhaust in *A* at 17 lbs. per square inch, take the same sizes as before. Here the resisting force on the *A* side is 17 × 112, or 1904 lbs. Steam in *B* acts on the annular area 112 − 4, or 108 square inches, the force being 108 × 167, or 18036 lbs., together with the atmospheric pressure on the piston rod of 14·7 × 4, or 59 lbs. Thus the

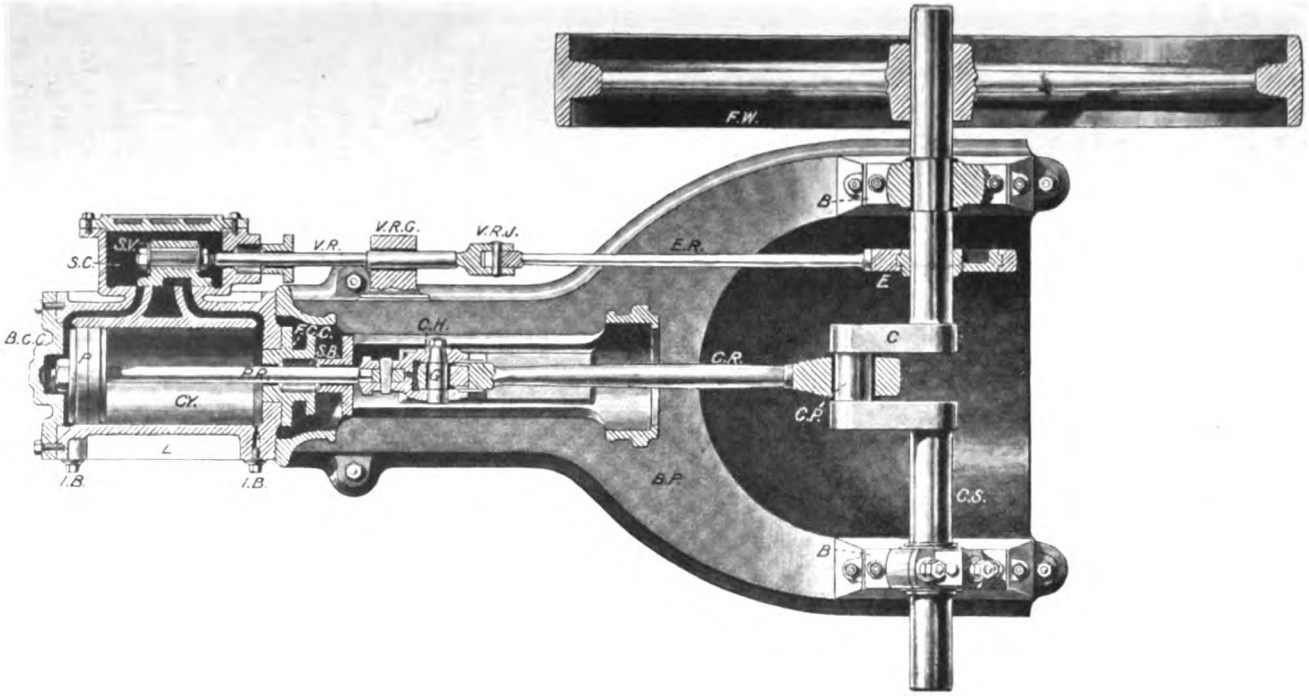

FIG. 15.—PLAN OF SMALL HORIZONTAL ENGINE.

Showing slide valve S.V., steam or valve chest S.C., valve rod V.R. and guide V.R.G., eccentric E., eccentric rod E.R. crank shaft C.S., flywheel F.W., crank shaft pedestals B., cross head C.H., back and front cylinder covers B.C.C. and F.C.C.

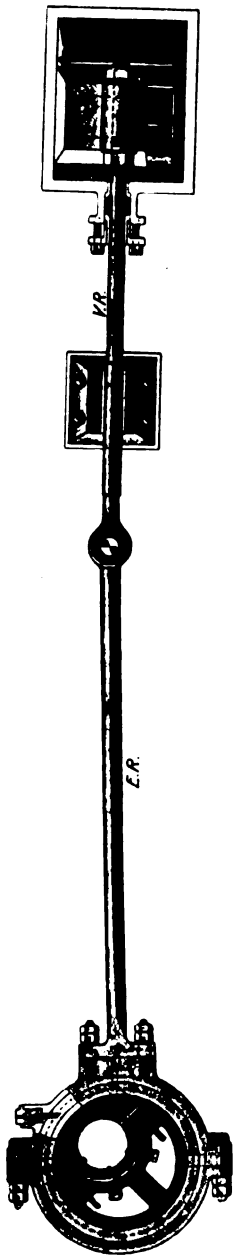

FIG. 16. Side view of eccentric and valve of Fig. 15, showing how the valve uncovers the ports. The edges A and B are shown also in Fig. 20.

resultant force from right to left is 16191 lbs. Notice that it is the area of the piston rod which has caused the above rough and ready answer to be too great by nearly 4 per cent. It is usual to neglect the area of the piston rod in such calculations.

28. It is the function of a **valve gear** to admit and exhaust steam to and from the spaces *A* and *B* at the proper instants. We might imagine four valves—one admitting steam from the boiler to *A*, another exhausting it, and a similar pair to and from *B*. Thus in Fig. 22 there are the two steam valves *A* and *B* which admit steam from the space *F* to which it comes from the boiler and another two, *C* and *D*, which release steam to the exhaust space *E*, which communicates with the atmosphere or a condenser. The valves are cylindric, filling cylindric seats, and it is the very effective but complicated *Corliss gear* which gives them their proper motions.

29. In a very great many engines a **slide valve** is used like *SV*, Figs. 15 and 16, the face of the valve and its seat being plane. The eccentric disc *E* is keyed on the crank shaft so that the straps and rod *ER* cause the valve to get a reciprocating motion, a thing easy enough to understand when seen, and not to be easily understood without being seen. Fig. 20 shows in 13 views the motions of the piston and valve. Steam is admitted to the steam chest *SC* all round the back of the valve, which slides steam tight on the seat. In Fig. 15 steam is rushing from *SC* through the left-hand port to the space to the left of the piston, whereas any steam which may exist in *Cy* is free to escape by the right-hand port to the exhaust passage, which is cast as part of the cylinder. Another view, a cross section of the cylinder and valve through this exhaust

passage, is shown in Fig. 18. Let the student examine and sketch and draw a real valve. I have attempted to give an idea of its shape in Fig. 19. On the valve seat there are three openings or

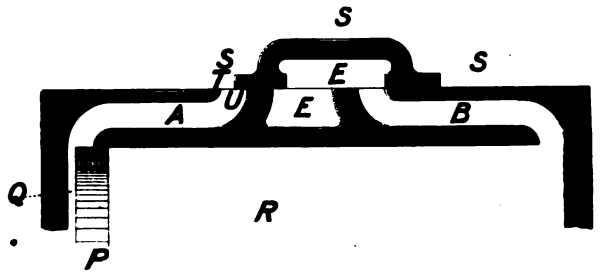

FIG. 17.—SLIDE VALVE AND SEAT.
In the position shown, steam is entering from the steam space S through A to the space Q; any steam in R is exhausting through B to E.

the ends of passages. The narrow P_1 leads to one end of the cylinder, the narrow P_2 to the other end, and the broader middle one E to the exhaust. Looking down on the back of the valve, Fig. 16, when it lies on its seat, we see how as it moves it uncovers and covers up again the ports P_1 and P_2, so that steam may get into them or get

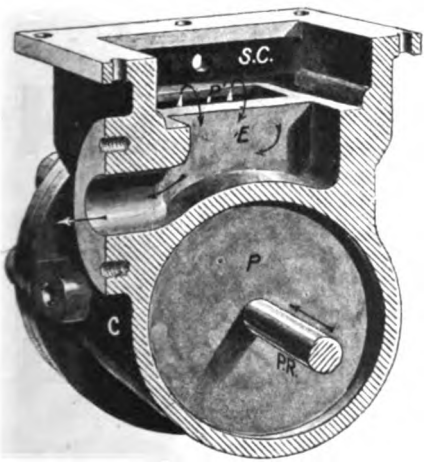

FIG. 18.
Perspective of section of cylinder through exhaust passage R. Valve not shown.

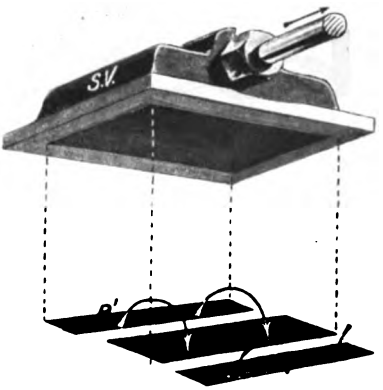

FIG. 19.
Showing slide valve lifted above the ports P1 and P2 and exhaust space E which it usually covers.

cut off, and underneath the valve we see by the section, Fig. 18, how steam reaches E from P_1 or P_2 when it is necessary to exhaust. It will be found by Fig. 20, 1 and 2, if we keep our eye on what occurs in the space to the left of the piston P, that steam is admitted

freely as the piston travels from left to right until in 3 we see that it is cut off. As the piston travels on and no more steam is admitted, as the volume of the steam gets larger, its pressure gets less, and it continues to get less till we have the position shown in 6 or 7. Here the steam is *released* and begins to rush away to the exhaust; in 8 we may imagine that even if the time is short, so much steam has got away that the pressure is practically the same as in the exhaust. Now the piston begins to turn back, to move from right to left, and as it moves, the left-hand space is freely open to the exhaust, and the pressure in it is low and remains so till we get to 11. The exhaust now closes, and what is called *cushioning* begins. As the piston

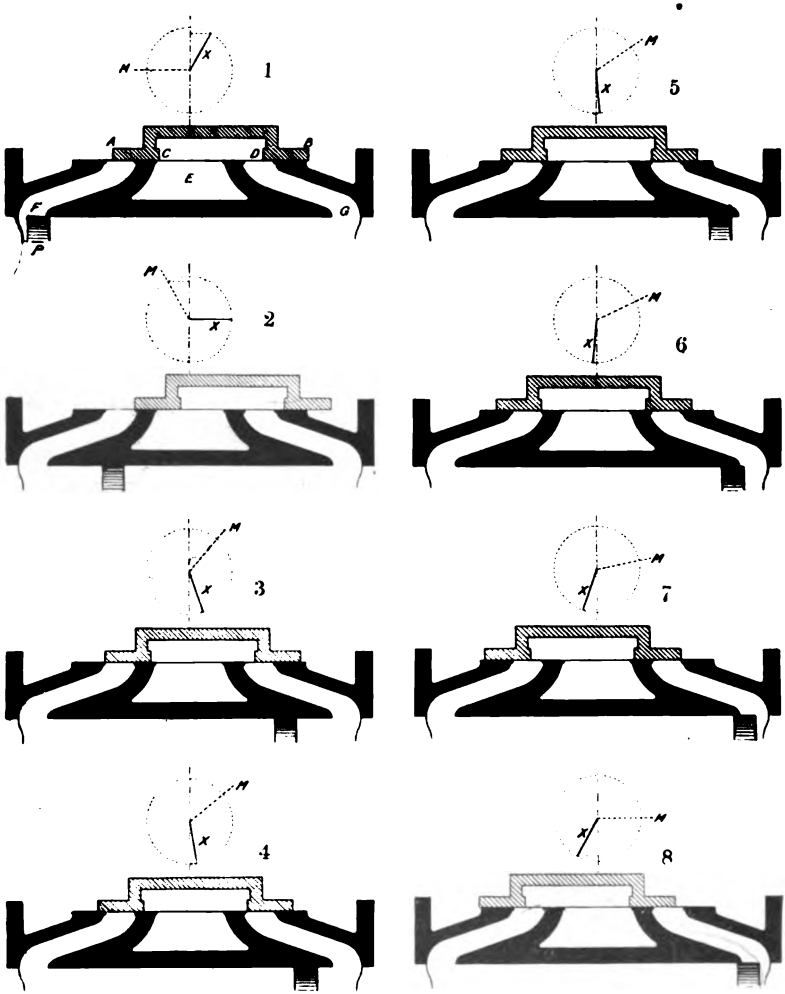

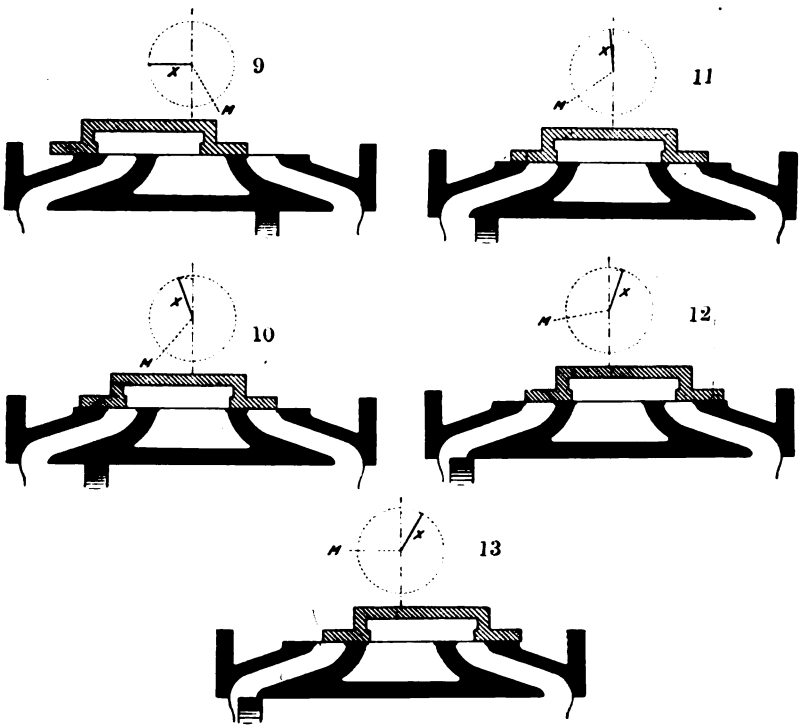

FIG. 20.—RELATIVE POSITIONS OF ECCENTRIC SLIDE VALVE AND PISTON.

As the crank M turns clockwise, through one revolution, the valve and piston take these positions. The position of the crank M is shown for each, and X shows the position of the eccentric, which, as in Fig. 15, works the valve directly. X is ahead of M by an angle, which is 90° + the *angle of advance*. In this case the angle of advance is 30°.

makes the space smaller, any steam in this space gets to have a higher and higher pressure until, in the position of 12, fresh steam is admitted just before the beginning of the new stroke. This cushioning and admission before the end of the stroke are just as important in high-speed engines in bringing the massive reciprocating piston, &c., to rest, as a thick feather bed would be in preventing one getting hurt in jumping from a window.

30. To ensure the study of the diagrams of Fig. 20 let the student draw upon paper a curve showing his notion of how the pressure alters in the left-hand space. If he will measure the distance of the piston (any point of it) from the end of its stroke and call it x at any instant, and at the corresponding time try to get a notion of the steam pressure in the space, he will see that the following numbers are about right. I take the entering steam to be at the absolute pressure of 100 lbs. per square inch, and the exhaust steam at 17 lbs. per square inch (as if it were a non-condensing

engine, the exhaust being a little greater in pressure than the atmosphere). If the crank of an actual engine made one turn in about two minutes, and if we had a pressure gauge to show the pressure in A, we could observe these pressures. But in truth they were measured in a very different way on an engine making 100 revolutions per minute.

Students will note for themselves how reasonable it is to assume that the pressures are fairly correct. I take the length of the crank to be 0·5 feet.

FORWARD STROKE.

x	0	0·1	0·2	0·3	0·4	0·5	0·6	0·7	0·8	0·9	1·0
p	100	100	100	100	100	100	97	85	63	50	23

BACK STROKE.

x	1·0	0·9	0·8	0·7	0·6	0·5	0·4	0·3	0·2	0·1	0·0	50·00
p	23	19	18	17	17	17	17	17	17	19	28	100

The student will now plot x and p as the co-ordinates of points on squared paper to any scales he pleases, and see what sort of figure he obtains. He will note that the points of admission, cut off, release, and compression may not seem to be very distinctly marked; this is because the pressures were measured on a quick moving engine whose valves closed comparatively slowly. The best kinds of valve gear close the valves very quickly. We have an instrument called an *indicator*, which draws such a curve as this for us, showing the pressure on either side of the piston for all positions of the piston, even when the engine revolves at 350 revolutions per minute; it is easy to understand that it is of great use to the engineer whose slide valve and piston are out of sight. For one thing, it enables him to see if his valve is admitting, cutting off, releasing, and allowing compression to begin just at the right periods.

Notice in the above that the distance x does not exactly represent the volume of the steam to scale, because, even when x is o and the piston is at the end of its stroke, the space has some volume which we call **the clearance**. We cannot let the piston come quite up to the cylinder end, and besides the passages have some volume. We try to get the volume of the clearance space as small as possible (and of as little surface as possible because of condensation when fresh steam is admitted), but in the following approximate calculations I shall assume no clearance.

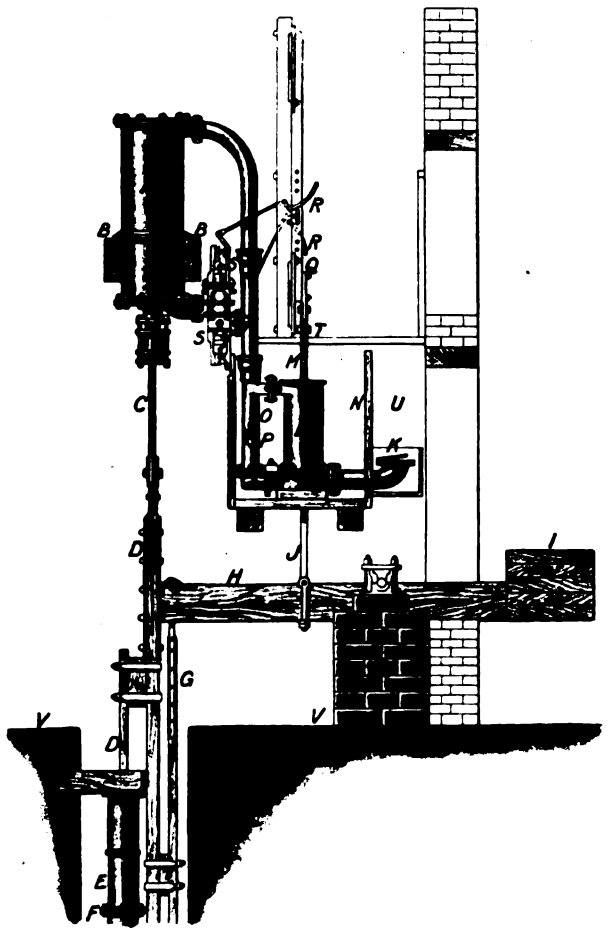

FIG. 21.—BULL'S PUMPING ENGINE.

Heavy pump rods D, attached by piston rod C to piston in cylinder A, lifted up by steam pressure, vacuum maintained above piston, and produced below it in descent by the pipe condenser P in the cold-water tank N and air pump L. The lever H enables weights to be adjusted, and also drives air pump rod J M, which also is a plug rod regulating the valves.

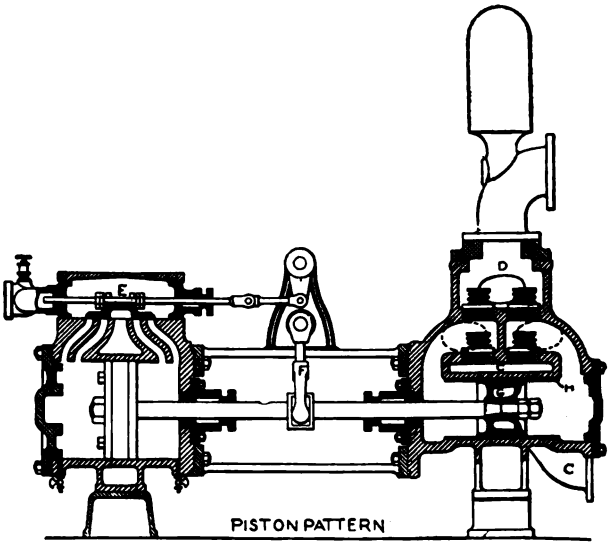

FIG. 21*a*. — WORTHINGTON STEAM PUMP.

In this, as in the many copies of it, the steam and pump pistons are on one rod. As used now, it is double, that is there are two rods, two steam cylinders, and two pumps. The rod of one moves an arm F, and this works the slide valve E of the other, so that there is a pause at the end of each stroke, allowing the pump valves to open and close gradually. The pump has a liner H, which may be thick or thin for high or low lifts. Water is pumped from C to D.

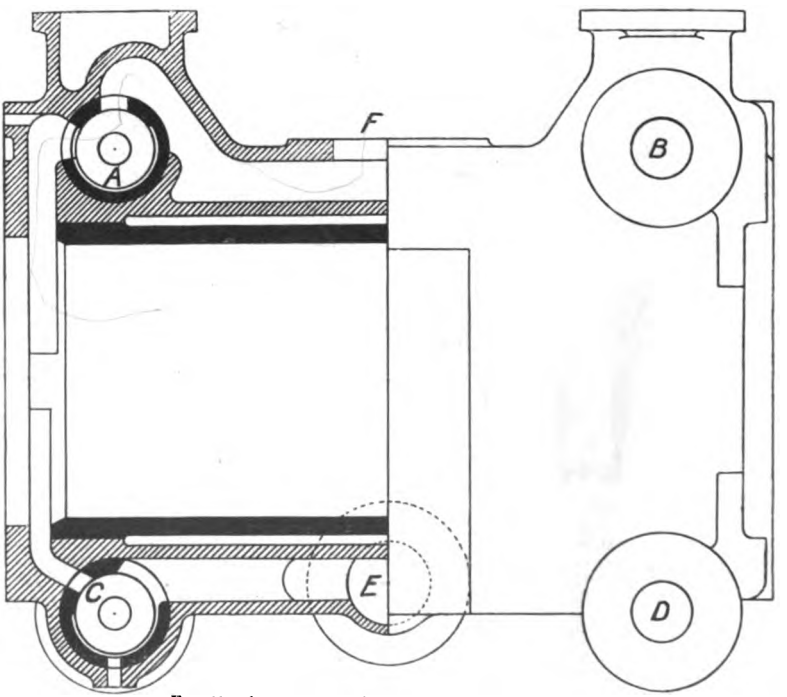

FIG. 22.—CYLINDER OF ENGINE WITH CORLISS GEAR.

Showing the liner, steam jacket, steam ports A and B, and exhaust ports C and D. Steam enters at F, and is exhausted at E. The valves are cylindric slides rotated by rods from a wristplate. The governor disengages the admission valves, so that they shut off quickly, earlier or later in the stroke depending on the work being done by the engine.

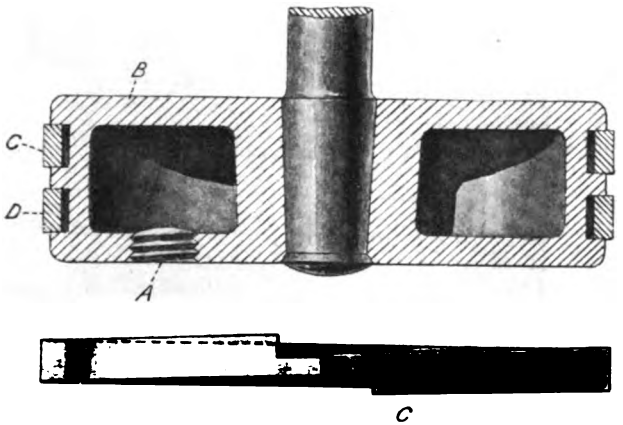

FIG 23.—PISTON.
Piston with a hollow cast-iron body plugged at A.

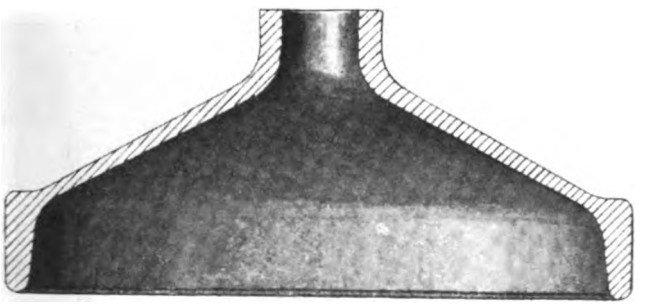

FIG. 24.—CAST STEEL PISTON BODY.

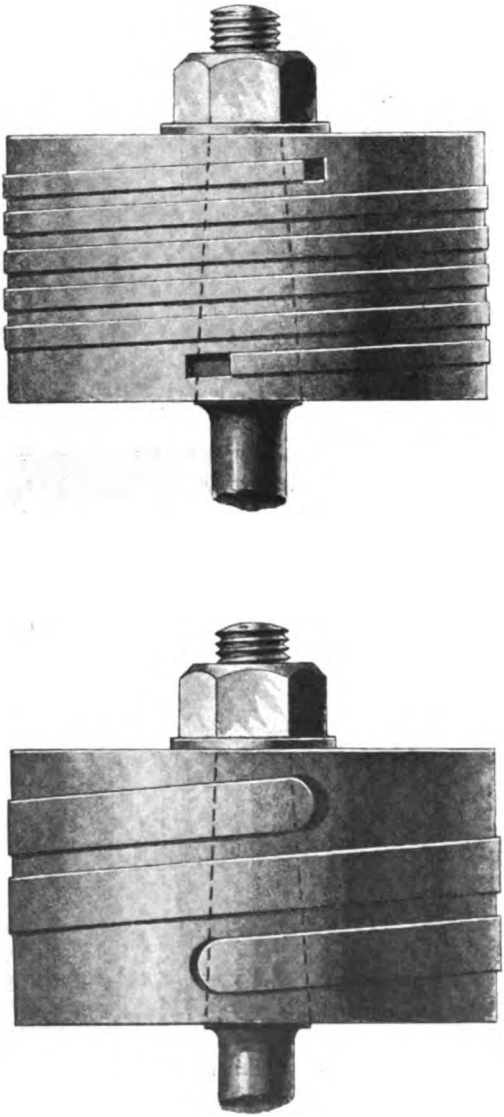

FIGS. 25 AND 26.—PISTONS.
Pistons each with one spiral packing ring.

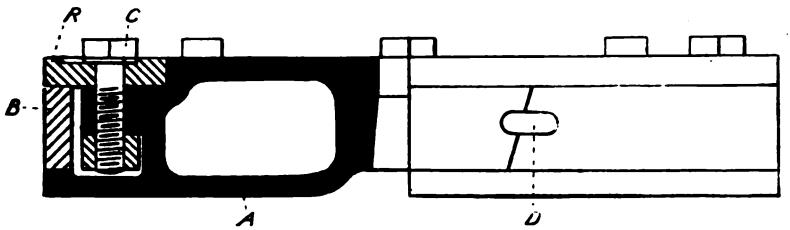

FIG. 27.

Piston with hollow cast-iron body; with single packing ring B, pressed out with many springs. Junk ring R is fastened down by the pins C. D is the tongue.

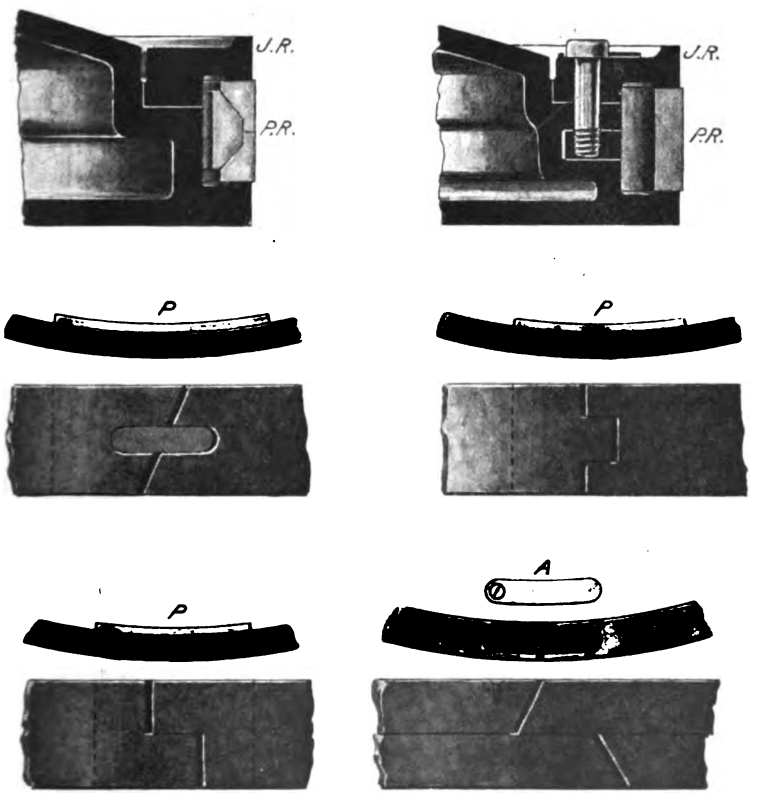

FIG. 28.—PISTON RINGS AND TONGUES.

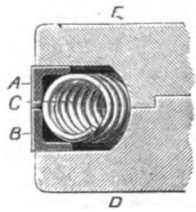

FIG. 29.—PISTON PACKING.

Two rings A and B are pressed outwards and apart by a continuous spiral spring C all round. This is to prevent the usual leakage at the top and bottom flat surfaces between the ring and piston body.

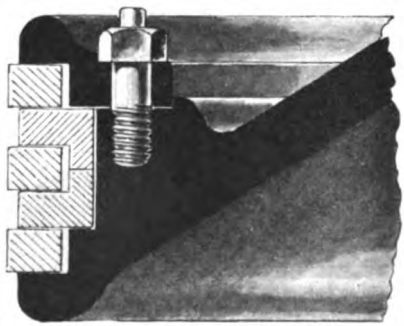

FIG. 30.—PISTON PACKING.

The junk ring is screwed down so that the piston rings just fit the grooves, and the nuts fastening it in position are secured by split pins.

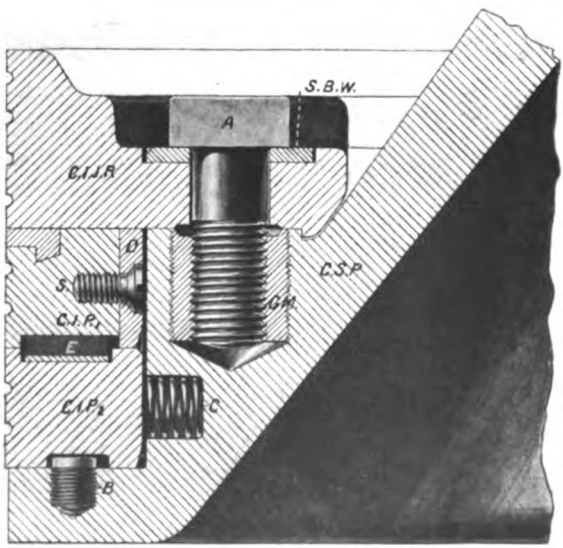

FIG. 31.

An elaborate piston packing for the high-pressure cylinder of a marine engine.

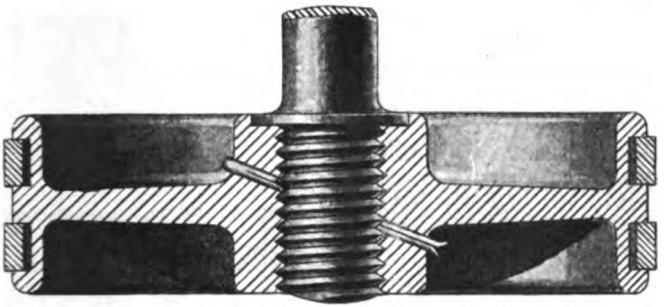

FIG. 32.—PISTON WITH TWO RINGS.

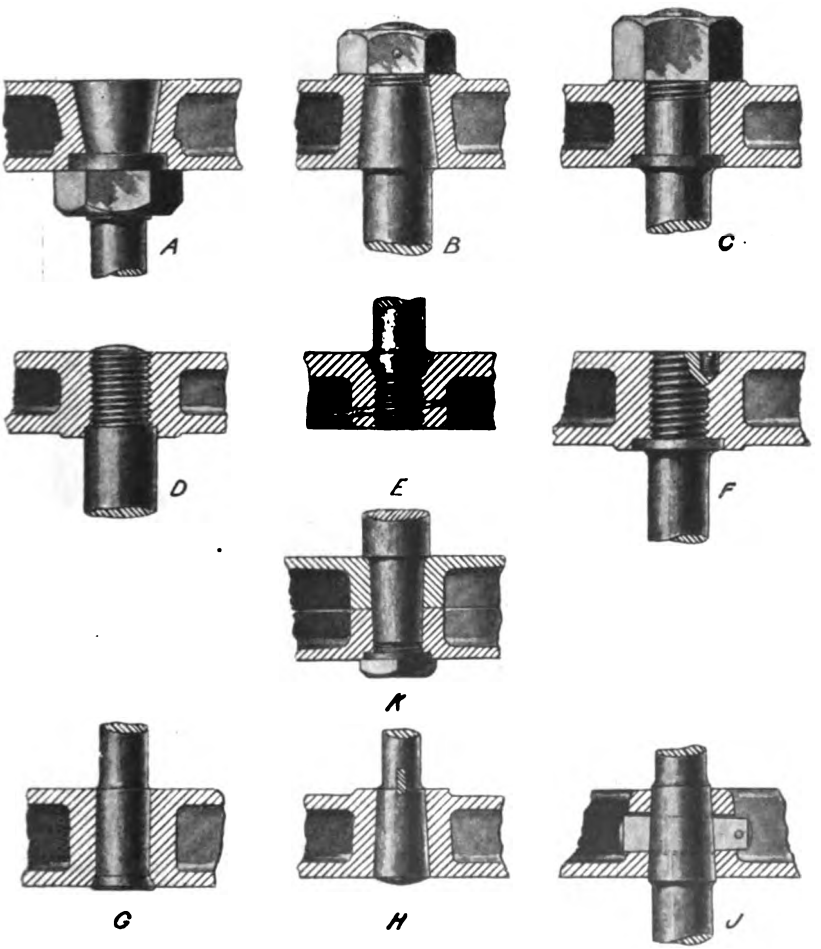

FIG. 33.—CONNECTION OF PISTON TO PISTON ROD.

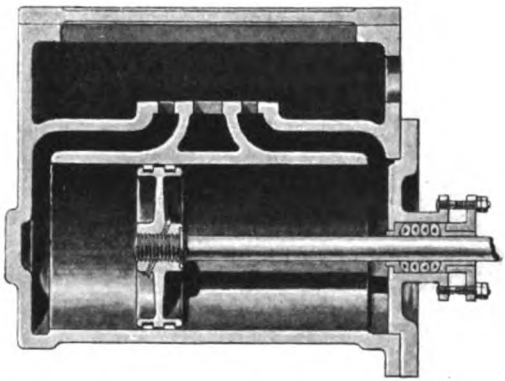

FIG. 34.—SMALL CYLINDER AND PISTON.

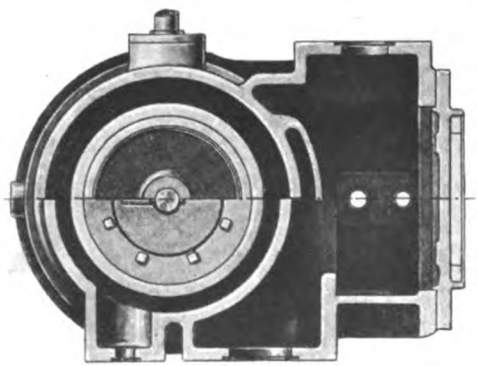

FIG. 35.—SMALL CYLINDER AND PISTON.

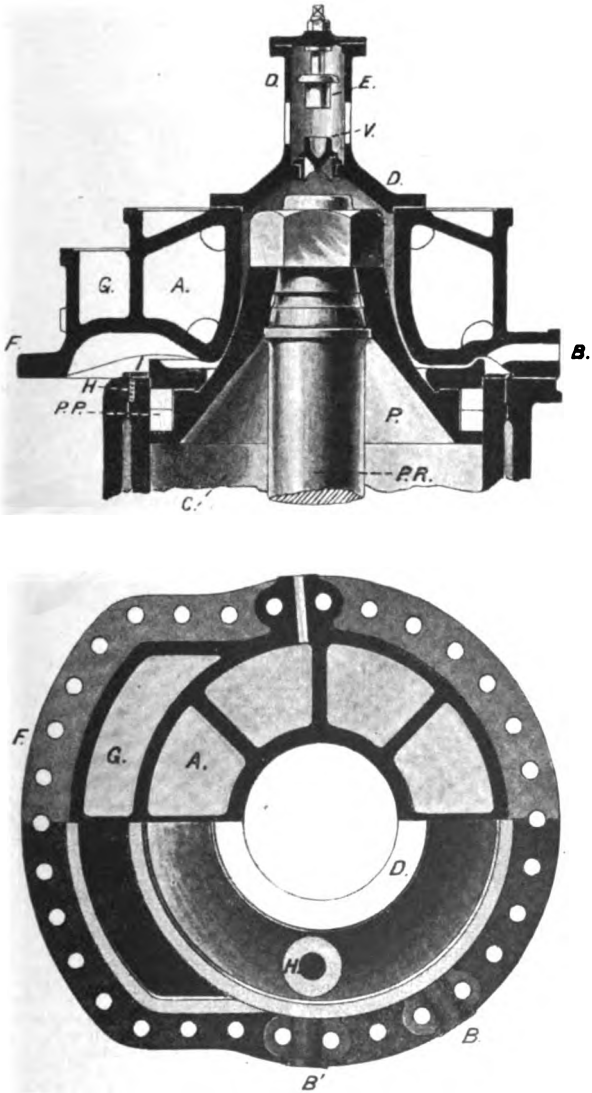

FIG. 36.—COVER FOR HIGH-PRESSURE CYLINDER.

This cover is generally of cast steel and is not round, but forms one side of the steam port; and in order not to break this large joint more frequently than can be helped there is a smaller central piece D, carrying the relief valve, V, which may be detached when the cylinder requires examination. In the relief valve V, the spring is omitted, as also are the means of letting away water and steam. There should be relief valves, as V, at the top and bottom of all cylinders, but sometimes they are only placed at the top of the high-pressure cylinder and the bottom of the other main cylinders. The cover is cast hollow, steam circulating around A, forming an end, or cover, steam jacket. H I shows the packing between the liner and body, or shell, of cylinder, to prevent leakage and yet allow of unequal expansion of liner and shell. P.P. is the space for the piston rings or packing.

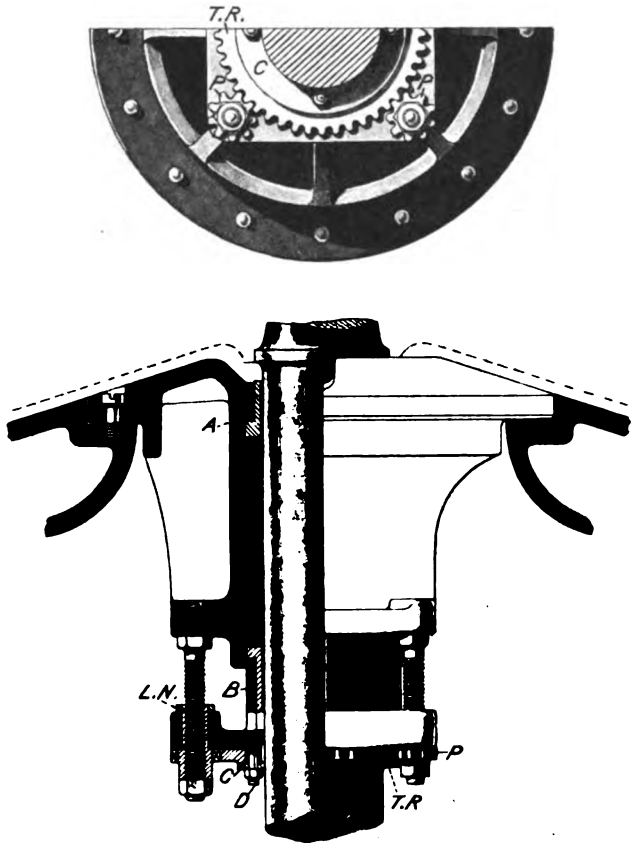

FIG. 37.—HIGH-PRESSURE CYLINDER STUFFING BOX.

In large cylinders the whole stuffing box is made separate from the cylinder shell on a door which is fitted from the inside to a circular recess by a number of screws. A and B are gun metal bushes, one in the stuffing box, the other in the gland, and between these the asbestos or other packing is placed. The adjustment is made by screwing down the nuts on the four long studs, and it is essential that the gland be true to the piston rod after. To ensure this, around each nut P is cut a number of teeth so as to form a pinion; the gland is then set truly, and the toothed ring T.R. is put into position, gearing with all four pinions, and is held up by the collar C and pins D. Then on turning one nut each of the others is turned the same amount by the toothed ring, and the adjustment is uniform. When this is as desired the gland is further secured by bringing down the locknuts L.N. on the other side as shown.

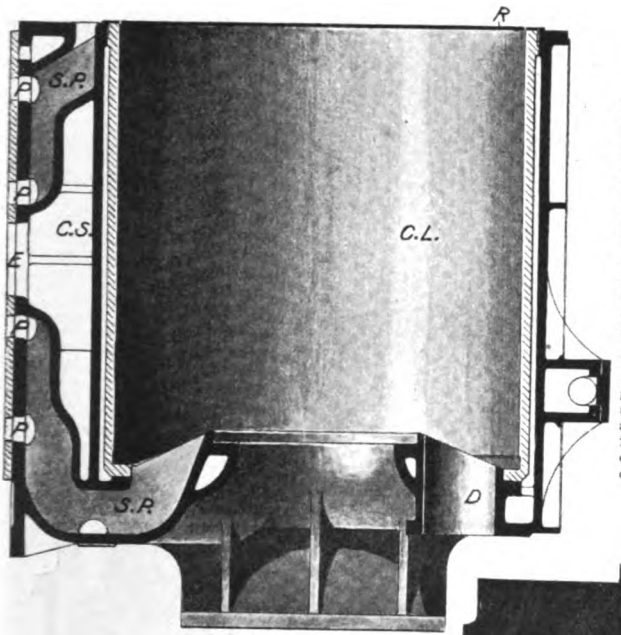

FIG. 38.—CYLINDER SHELL.

This is for the intermediate pressure cylinder. The door carrying the stuffing box is not shown, but the position it would occupy is easily seen by reference to Fig. 37 of a stuffing box. The manhole is at D, the door not being shown. The valve seat is of hard cast iron or steel, and is fastened down with countersunk gun metal screws, being well recessed so as to hold oil which serves to lubricate the valve face. Cast iron is found better than gun metal for the valve seat. The liner C.L. is also made of hard cast iron, and the remainder of the cylinder of soft cast iron.

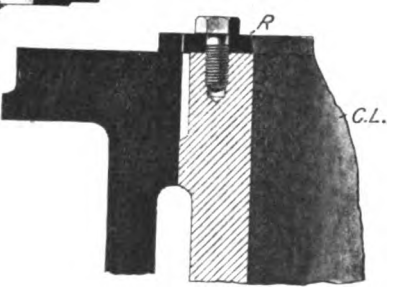

FIG. 39.—FASTENING OF LINER TO CYLINDER SHELL.

Showing how the liner C.L. is fastened by being screwed firmly to the cylinder base C.B., while at the top the ring R is screwed down so as to hold some asbestos packing in the recess, thus forming a stuffing box, and allowing the liner to expand and contract within the shell.

Figs. 6, 8, 9, 11, 30, 31, 36-39, 41, 48, 51, 52, are copied from complete drawings of a four cylinder triple expansion marine engine of the largest size, lent me by the Fairfield Shipbuilding and Engineering Company, Limited.

I have not shown on the drawings the *auxiliary starting valves* which admit steam direct from the steam pipe to either side of the intermediate or low-pressure piston at will. *Pass-Valves* admit steam only to the receiver spaces; they are freer from error of the engineer, but slower in action. Nor have I shown how water is drained away from the jackets to the condenser, that the engineer in charge can see in the glass tube of the water collector whether steam is blowing through.

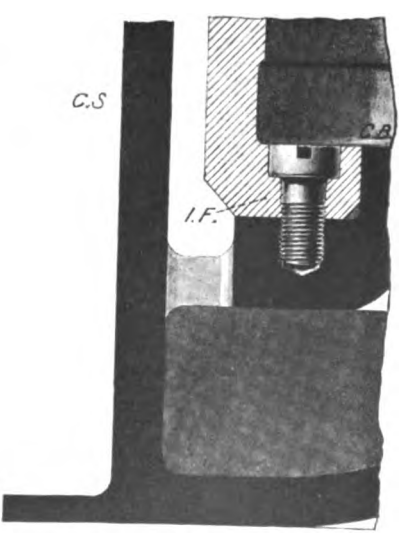

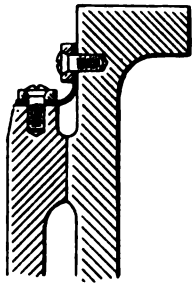

FIG. 40.—FASTENING OF LINER TO CYLINDER SHELL.

Expansion may be allowed for by using a copper ring having one row of screws in the cylinder shell and the other row in the cylinder liner.

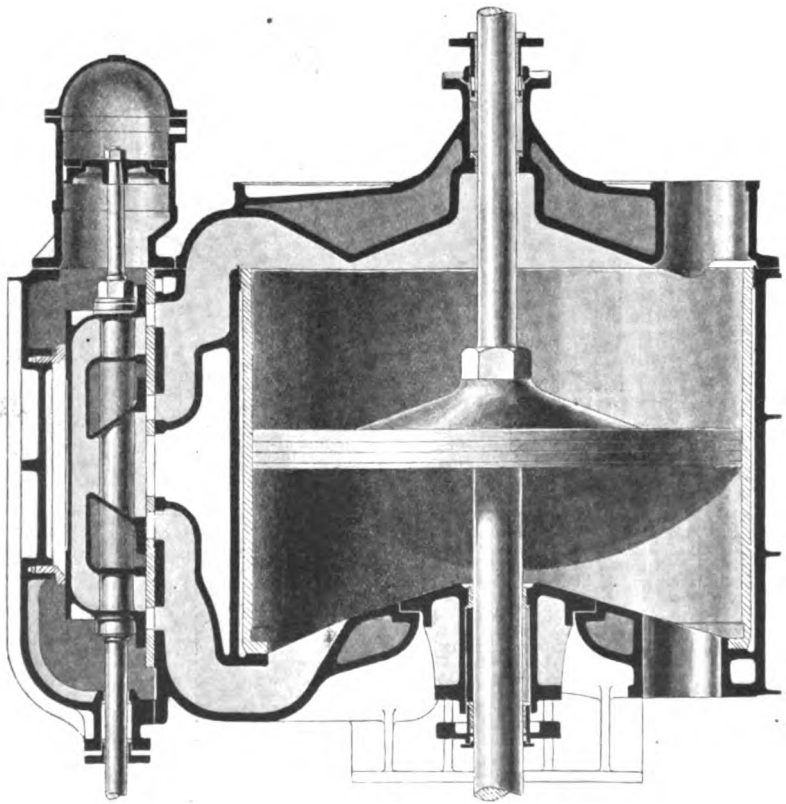

FIG 41.—MARINE ENGINE CYLINDER.

Showing the steam jacket, double ported valve with balance piston and relief frame. The shell, a complicated casting, the liner and the cover are the three important parts of a cylinder. The cover and shell are of soft cast iron, and the liner is of hard cast iron.

Tail rods—continuations of the piston rods—extending through the cylinder cover are getting to be thought unnecessary and objectionable in vertical engines.

Drain cocks,—not shown in figure,—from the bottoms of all the cylinders and valve chests are worked by levers from the starting platform and discharge into the condensers,—not into the feed tank. Two manholes are shown one above and one below the piston, the man-hole covers are omitted in the figure. Safety valves and pressure gauges are fitted to all receivers.

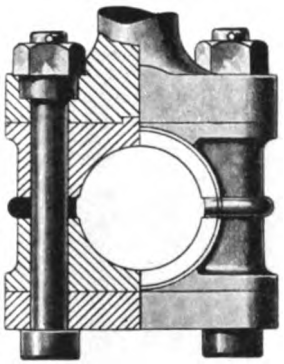

FIG. 42.—CONNECTING ROD END.

The end of this connecting rod is made T-shaped, and the brass is recessed into it. Between the brasses is a thick liner,—often accompanied by thin sheets of brass or tin,—and adjustment for wear is made by reducing the thickness of the liner. There is a plate or cap at the outer end, and long bolts hold the whole together as shown.

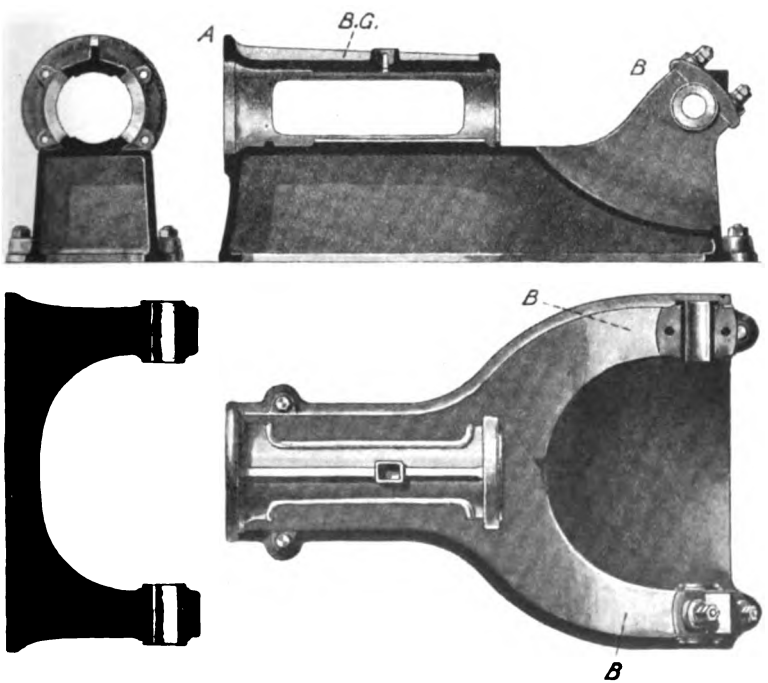

FIG. 43.—FRAME FOR SMALL ENGINE.

With bored guide. Cylinder (not shown) overhung. Fly-wheel overhung.

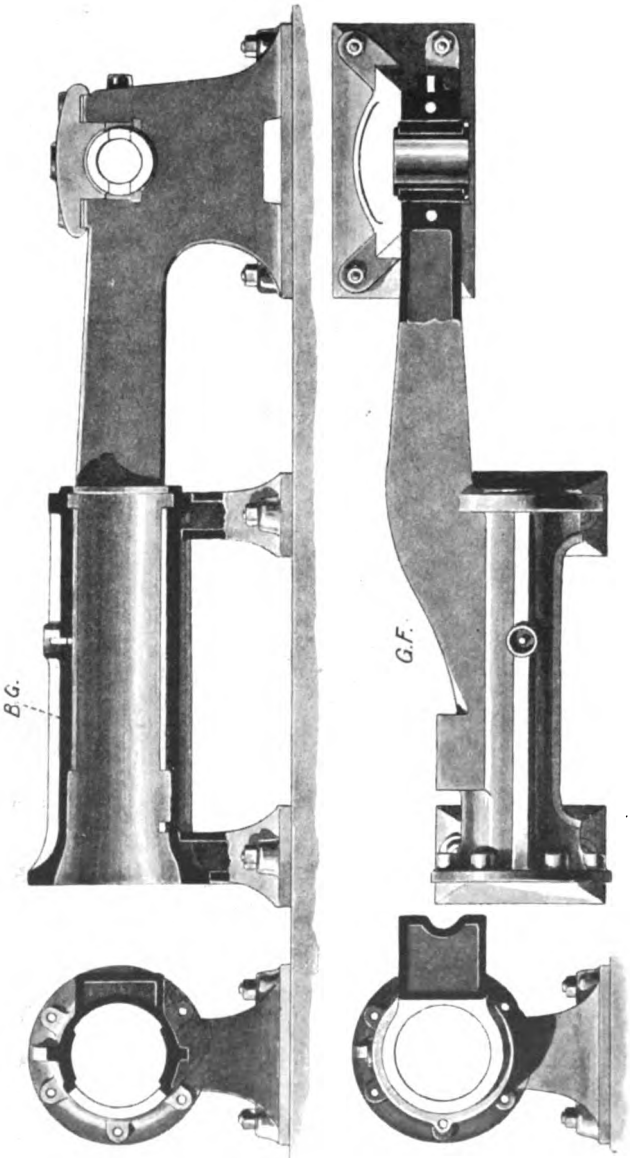

FIG. 44.—FRAME FOR SMALL ENGINE.

Girder type, with bored guide. Cylinder (not shown) overhung. Separate crank shaft bearing.

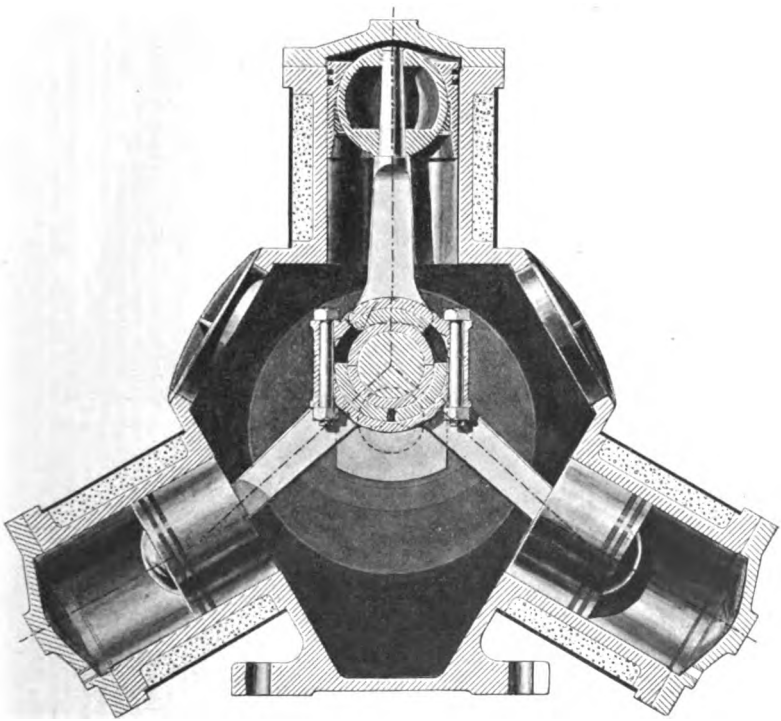

FIG. 45.—SMALL BROTHERHOOD STEAM ENGINE.

There are three single-acting cylinders with trunk pistons, driving the same crank. The valve motion is not shown.

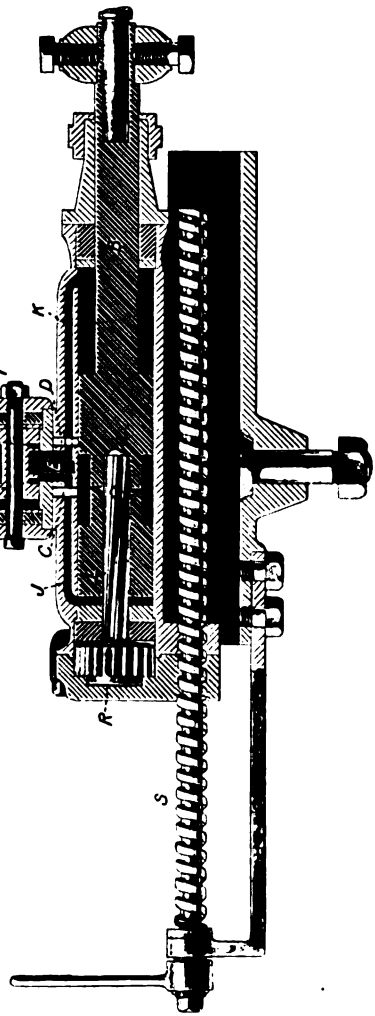

FIG. 46.—STEAM ROCK DRILL.

The drill is attached to the piston rod B, and the screw S feeds it. During every stroke the piston drives the ratchet R through the bar with twist grooves R B, and pawls prevent back rotation in the return stroke, so that the piston and drill rotate. The piston valve F G admits steam alternately to the ends of the piston, the valve being held fast on its seat while the stroke is being made, because there is steam pressure on one side and exhaust pressure in one of the passages C or D on the other side. C and D exhaust from the ends of the piston. The waist space round A is always open to the exhaust, and thus either C or D has exhaust pressure in it, the other having steam, the larger parts of the piston opening one of them and closing the other at the same time; and this also determines whether the space at the end of the valve shall be open to steam or exhaust, and therefore how it shall move under the steam pressure. The whole contrivance is most ingenious.

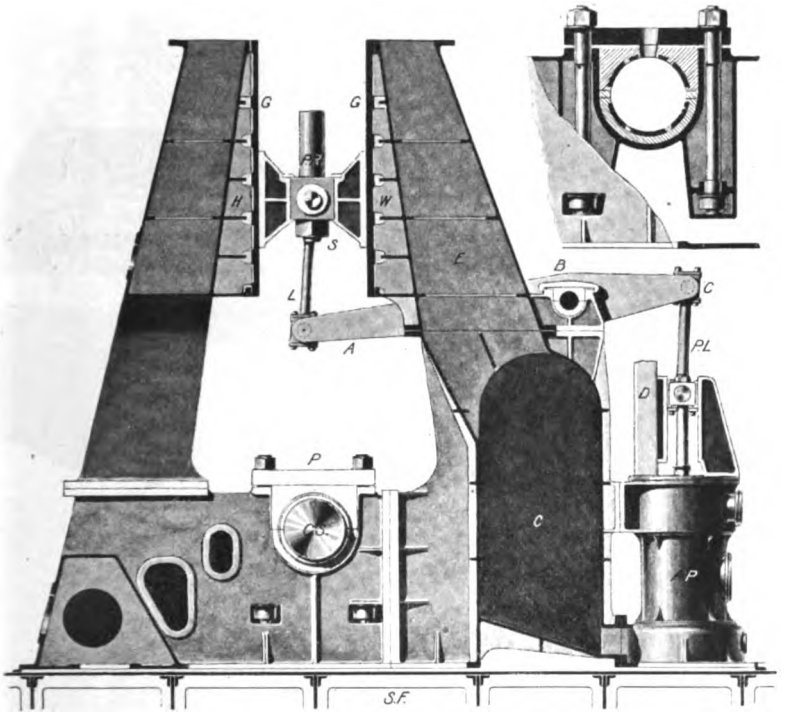

FIG. 47.—MARINE ENGINE FRAME.

This shows the common arrangement of the frame in marine engines. It rests upon the ship frame S.F. It has open slide bearings suitable for the *double slipper slide* S shown in figure, P.R. being the piston rod, the other end of which is secured to the piston working in the cylinder which rests upon the top of the frame, but is not shown in figure. Water usually circulates underneath the guide G which is in use, and also water can be sent to the bearings if necessary. The bottom brasses of the main bearings may be easily removed by taking off the cap P, and top brass, when they will rotate and may be lifted off without displacing the shaft.

Three or four pumps like A.P. (air, force, circulating, and bilge) are worked from one crosshead by links as L, and levers as A. B. C. Many engineers prefer an independent engine to drive the centrifugal air pumps, which are of gun metal with lignum vitæ bearings, and also independent feed and bilge pumps. The surface condenser is in the space C.

Another common form of frame is like half the above (only one guide) with a steel stay bar in front.

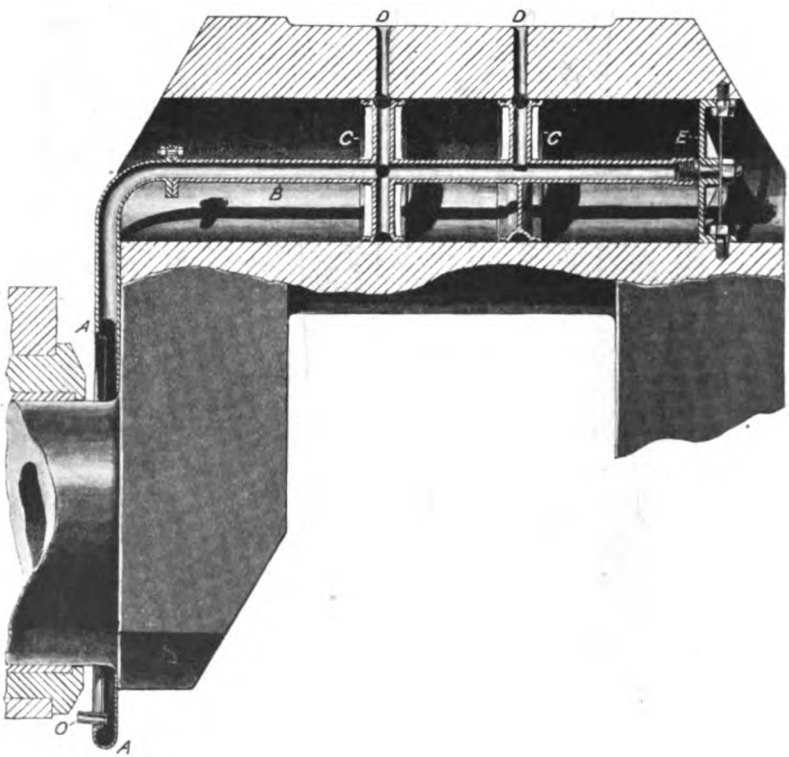

FIG. 48.—MARINE ENGINE CRANK.

In a large marine engine crank shaft the pins and shaft are hollow. A, the annular lubricator, —sends oil out by centrifugal force through the tube B to the bearing surface through the holes D. This system of lubrication is adopted in most modern engines.

Balance weights are never now fitted to the cranks of large marine engines to balance the rotating parts. In torpedo destroyers and other quick engines, however, the cranks are balanced.

The crank shafts of marine engines are usually made in parts, the part for each cylinder being one solid forging, and these parts are connected by flanged couplings forged on solid.

In smaller engines the crank shaft is forged all in one piece as in a locomotive. Many engineers build up each part by shrinking the webs on to the shafts and the pins into the webs, driving or screwing small pins into the joints.

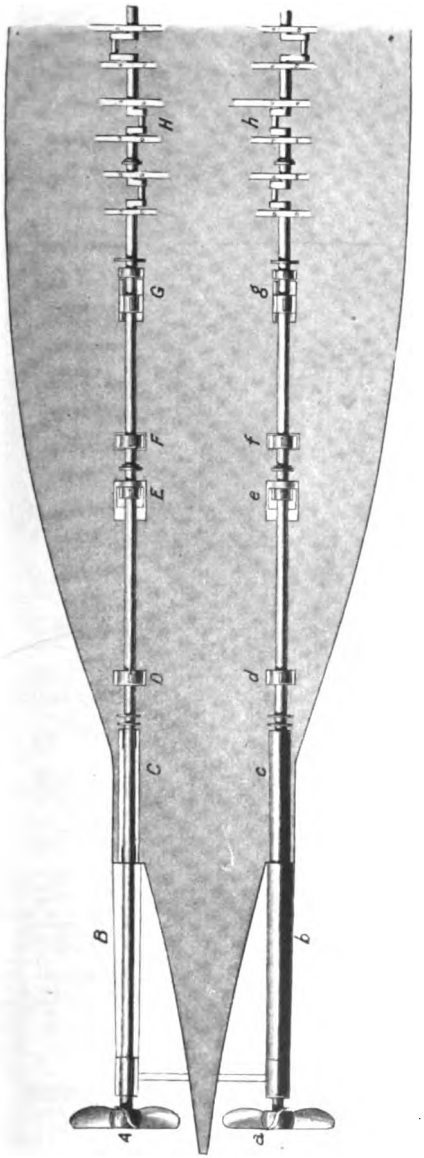

FIG. 41.—SECTIONAL PLAN OF TWIN SCREW STEAMER.

Showing the position of the propeller shafts and crank shafts along the steamer. Two three-cylinder engines at H and *h*. G and *g* are thrust blocks. E, F, D *d* are ordinary bearings. C *c* are the stern tubes with casings or sleeves B *b*, and there are outer bearings close to the propellers A *a*, carried by one bracket.

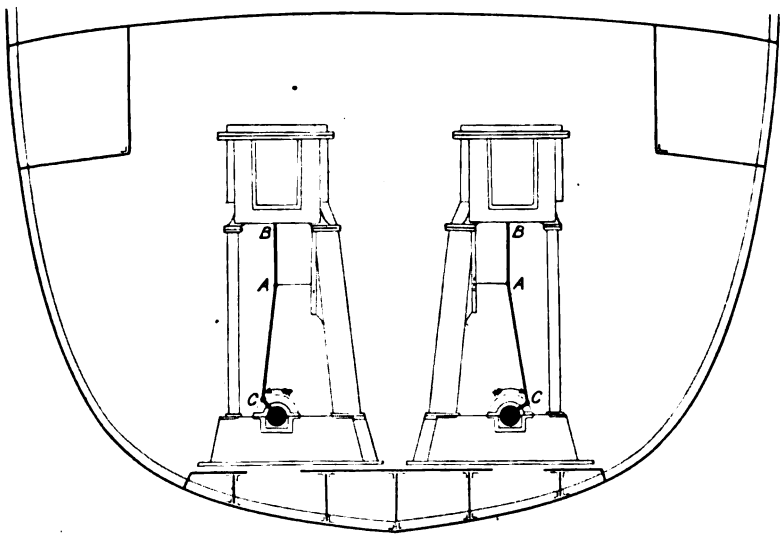

FIG. 50.—CROSS SECTION OF TWIN SCREW STEAMER.

Showing position of shafts and engines in the hull. In ships of war, coal bunker protection.

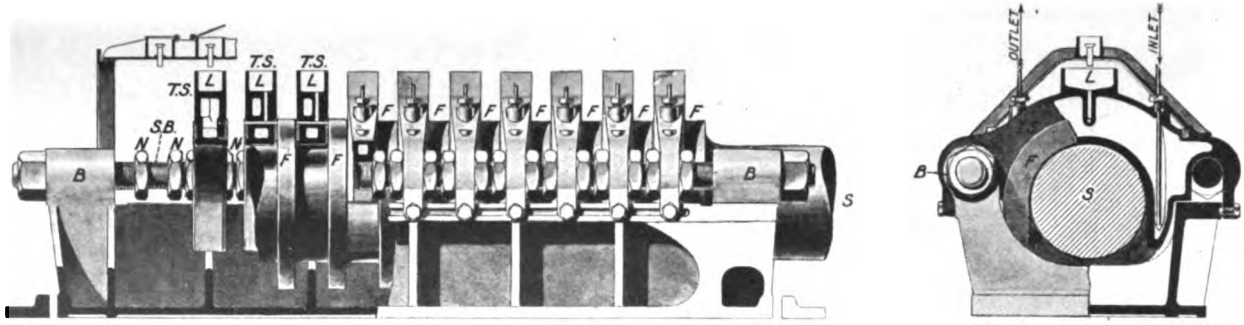

FIG. 51.—THRUST BLOCK.

The thrust block is attached to the ship frames near engines.

There are eleven collars F on the shaft S, which rub on horse-shoe surfaces, lined on one side with white metal; these are easily withdrawn for repair; and there are fore and aft adjustments of each horse-shoe, for wear, by the nuts N.N on the side bolts passing from B to B. Wedges at the ends allow for bodily adjustment. The horse shoes are often cast hollow to allow water to circulate as shown, filling the whole trough. Ordinary plummer blocks are placed near the ends of the thrust block to carry the weight of the shaft S. Lubrication is by strings from the overhead boxes L.

Since adjustment for wear in ahead faces introduces play when the engines are put astern, it is sometimes thought advisable to set a few of the shoes to take the astern thrust alone, and in one or two cases independent shoes have been provided, one set taking the ahead thrust, and the other set taking the astern thrust, —in this case there would be two shoes to each recess.

The propeller shaft is in straight lengths of hollow forged steel, flanged couplings being forged on, except the sternmost length, which has a loose coupling, as it has to be fitted in from the outside through the stern tube. Each plummer block is provided with a water and an oil box.

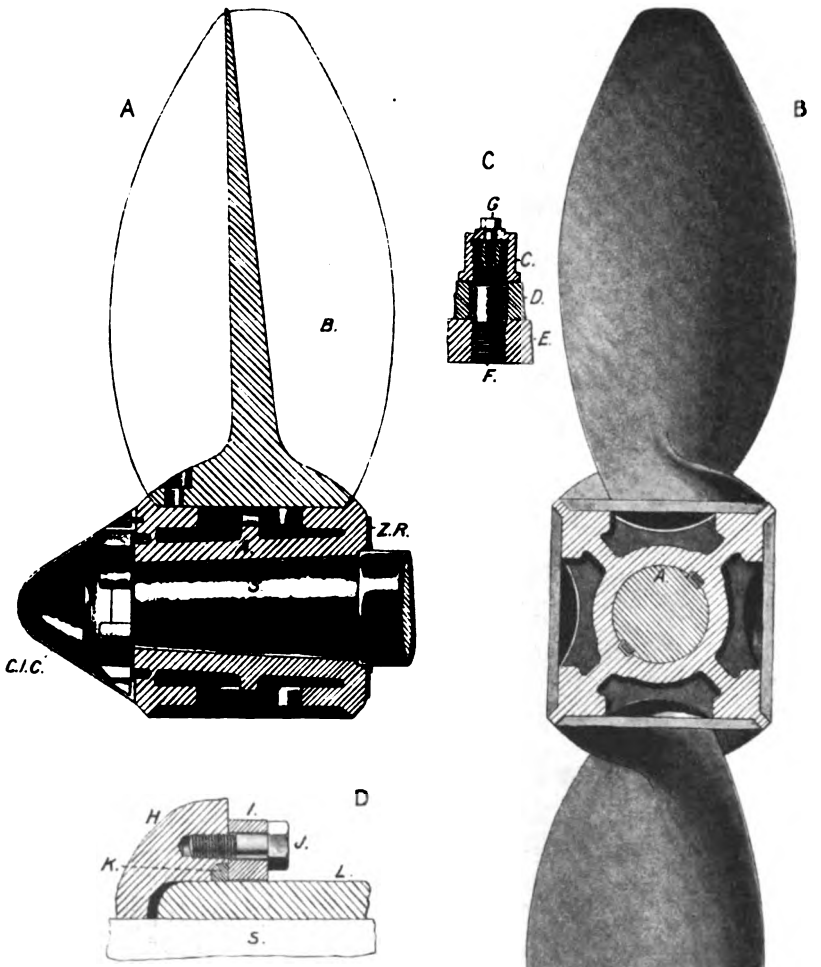

FIG. 52.—SCREW.

The figure shows a four-bladed screw, the blades B being made of manganese bronze, and secured by bolts to a cast steel hub A, which in its turn is secured to the conical end of the propeller shaft by two keys, a cup nut, end, and keep-plate, and to protect it from sea water there is a conical tailpiece over all. The propeller shaft passes through a gun-metal stern tube, which is fitted into the ship builder's stern tube fixed to ship frame.

There is a stuffing box where the shaft leaves the inner end, the rubbing surfaces being of lignum vitæ. Each blade is recessed into the boss, and all the bolts are made flush, with keep-plates to lock them. There are often means of slightly altering the pitch by changing the angle of the blades by making the bolt holes a little large. Everything is of gun-metal or manganese bronze.

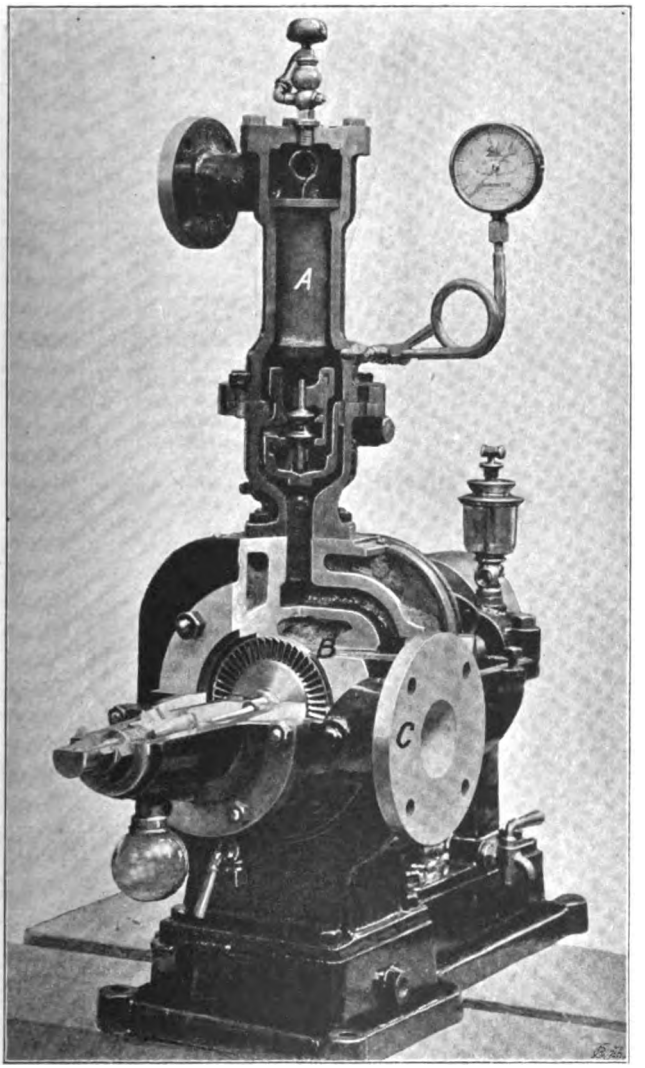

FIG. 53.—DE LAVAL'S TURBINE.

Specimen in South Kensington Museum, as cut into to show construction.
Steam enters at the top, travelling down through pipe A. At B the steam is guided through one or more mouthpieces, to impinge on and pass through the vanes of the wheel to the exhaust C.

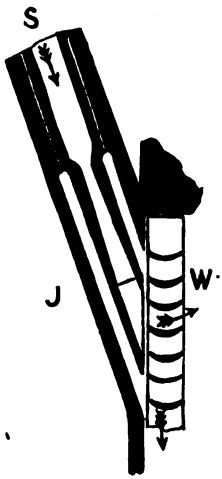

FIG. 54.

Section showing mouthpiece and vanes of wheel.

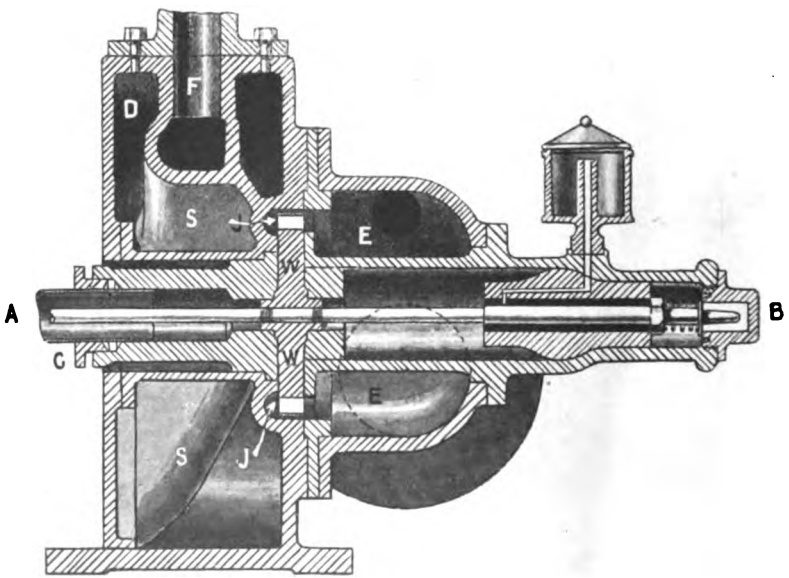

FIG. 55.—VERTICAL SECTION OF DE LAVAL'S TURBINE.

Steam coming down F finds its way through the chamber S to the mouthpieces J J, where it impinges on the wheel W, as shown in Fig. 54, and is then exhausted through the chamber E.

A 50-horse power Laval turbine at 15,000 revs. per minute is said to have used less than 20 lb., of steam per brake horse power hour.

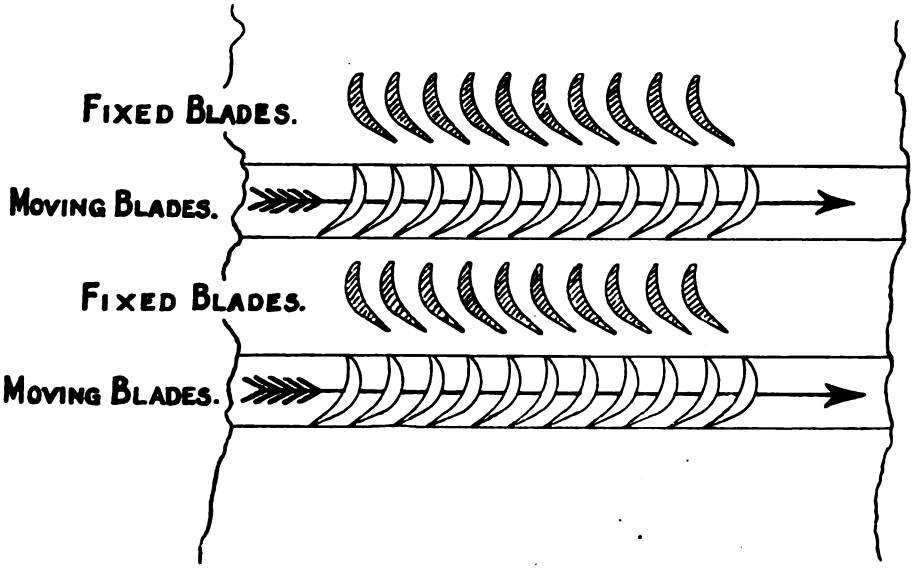

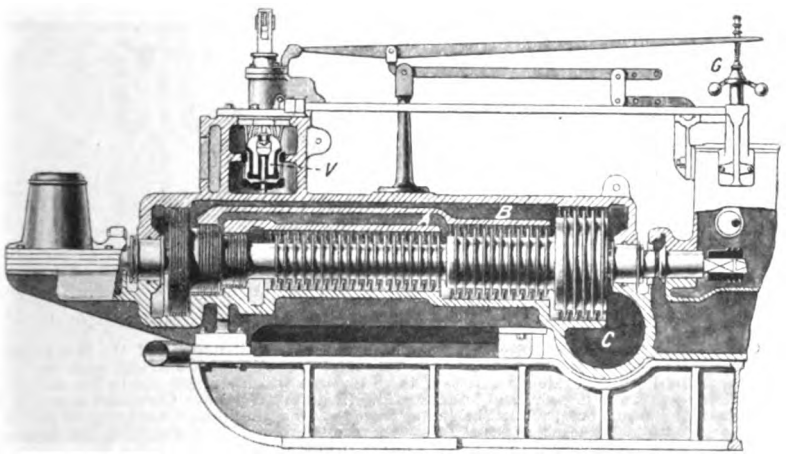

FIG. 56.—PARSON'S AXIAL FLOW STEAM TURBINE.

The axial flow turbines of "The Turbinia" are of about 2,100 horse-power, with a probable consumption of 14½ lbs. of steam per horse-power hour.

Steam enters through the valve V, and is led to the turbines flowing axially along the series and is exhausted through C. It continually enters moving blades from fixed blades, and fixed blades from moving blades, each pair being shaped on the well-known principles of construction of an axial flow turbine. The diameter gets greater as the pressure gets less. There are interesting arrangements for diminishing friction and taking up end thrust.

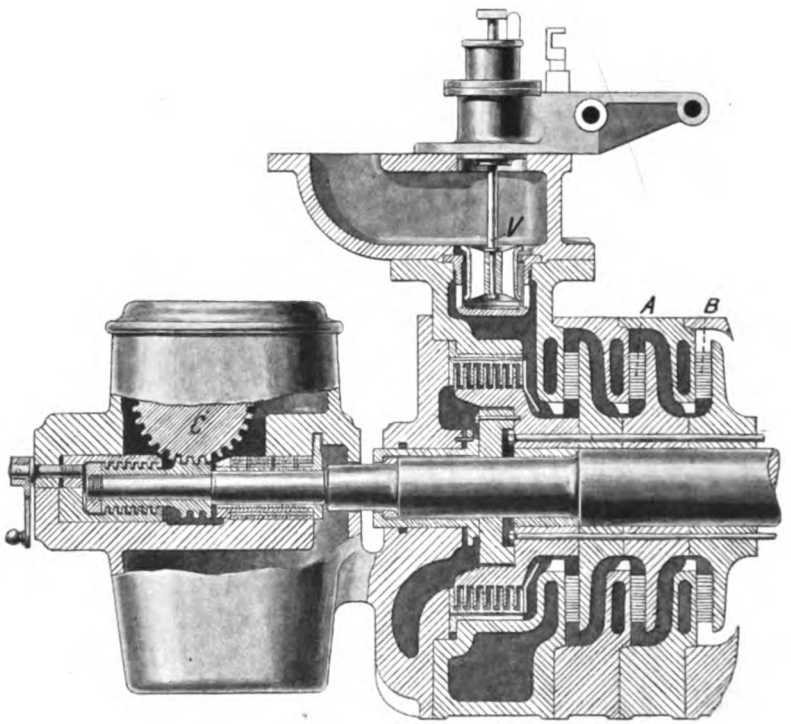

FIG. 57.—PARSON'S TURBINE (RADIAL FLOW).

Steam enters through the valve V, and is led by passages to the centre of the first turbine; having passed through outwards, it is led on to the centre of the second one A, and again to a third one B, until, having passed through a series of these turbines which are fastened to the shaft, it is at or below atmospheric pressure and is exhausted. In its radial passage the steam is guided by fixed vanes into moving ones, and left behind by these to flow again through fixed ones, so that each radial passage in itself means a passage through many turbines. The shapes of the fixed and moving vanes are well known to the student of radial flow turbines. Revolving discs on the left take up the end thrust. Speed 5,000 revolutions per minute.

Concentric sleeves on the left have oil circulating between them pumped in. The governing is by longer or shorter gusts of steam being supplied. From Prof. Ewing's tests I find $W = 480 + 17{\cdot}7\,E$ if W is total feed in lbs. per hour and E is the electrical horse-power given out by the driven dynamo; the highest E being 137, and the highest gauge steam pressure being 103 lbs. per square inch slightly superheated. The air pump was driven by a separate engine.

FIG. 58.—CYLINDER AND SMOKE-BOX END OF AN INSIDE CYLINDER LOCOMOTIVE.

Outside cylinders are much more used on the continent, and are universal in America. This shows how, in an inside cylinder locomotive, the cylinders, with the steam chest between, in one casting, are bolted to the frame plates. When the steam chest is above or below each cylinder, or there is one above or below with the valve faces sloping, larger cylinders may be used, but the working of the valves is not so simple. The very best position for the slide valves is *below* the cylinders, as this conduces to drainage and great lessening of condensation (see Art. 378).

The gauge of rails being 56½ inches in England the frames cannot be more than 50 inches apart, hence 17-inch cylinders are the largest size possible if the valve chest is between.

The surfaces of the frames are first made true, then the bored and finished cylinders are fitted, and, after the spectacle plate S.P. (Fig. 59) (with openings through which the connecting rods work), and another stay plate and foot plate are fitted, the frame is complete.

The shape and position of the blast pipe B.P. is of enormous importance, even a variation of ¼ inch in size producing a great change in the coal bill. The chimney is sometimes prolonged downwards to get less draught through the upper tubes. The blower pipe A produces a blast to quicken the fire when the engine is not working. Figs. 58-64 are copied from complete drawings of an inside cylinder locomotive lent me by Mr. Pickersgill, of Aberdeen (Great North of Scotland Railway). The descriptions overlap.

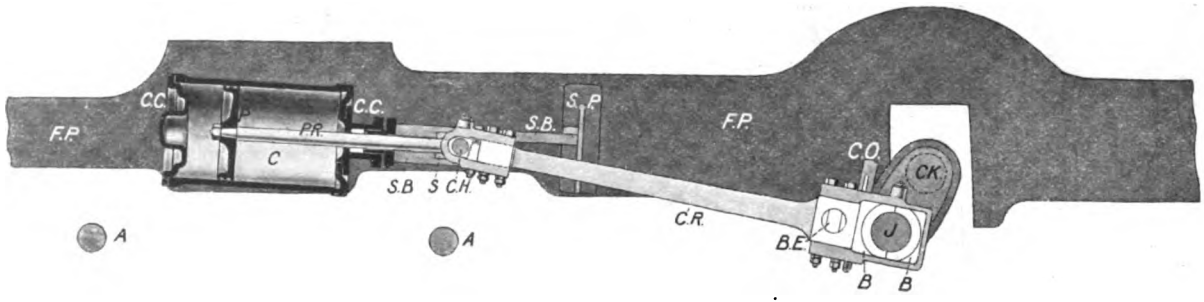

FIG. 59.—PART OF LOCOMOTIVE FRAME WITH CYLINDER, CONNECTING ROD AND CRANK.

There are four steel slide bars S.B. for each crosshead C.H. which are fixed by studs and nuts to the cylinder cover C.C., and bolted to the spectacle or stay plate S.P., which is a steel casting usually. By using four slide bars the end of the connecting rod C.R. need not be forked, and less vertical space between the top and bottom bars is required than if (as is more common) only two bars are used, as then they must be far enough apart to clear the connecting rod. It is getting to be very common now-a-days to use only one slide bar, the slide being a box formed on the crosshead. The big end of the connecting rod B.E. is fastened, by means of the two bolts, to a steel strap in which are two brasses B.B., which are adjusted to the crank pin J by the cotter C.O. But connecting rod ends are of other forms as in marine engines.

Horn plates and axle boxes hold the coupled wheels rigidly at right angles to the frame plates. In passenger engines the other wheels are free to take the curvature of the rails by use of radial axle boxes or of bogies. In this form of engine only one pair of axle boxes are guided exactly by the frame or girder. Horn blocks, grooved for oil, are fitted, and the whole work is very carefully tested for truth before the cylinders are finally fixed; holes being now bored in the frame in line with those in the cylinder casting. The axle boxes with their brass steps filled with white metal, bearing only on the top, are very carefully fitted to the hornplates, and afterwards fitted to the journals.

The side plates, &c., being on, the boiler (Fig. 202) is now brought complete and tried on. The smoke box tube plate S.T.P. (Fig. 58) is bolted to the cylinders,—this is the only rigid fastening; brackets on the fire-box end merely rest upon the frames and allow of $\frac{3}{8}$ inch expansion. The tubes are now fitted at the same time as the slide bars and engine gear underneath; in fact the upper and under work go on at the same time till the engine is lowered by a crane upon its axle boxes, which are now bedded on to the axles, and run underneath the engine on their wheels, the springs being inserted.

Drain cocks, worked by levers from the foot-plate, are not shown. The cylinders C are $1\frac{1}{4}$ inch thick to allow for re-boring when grooved through bad lubrication, or ashes entering from exhaust. Brass glands, hemp packing and studs are not shown, neither are the studs which fasten the cylinder covers and valve chest covers to the main castings.

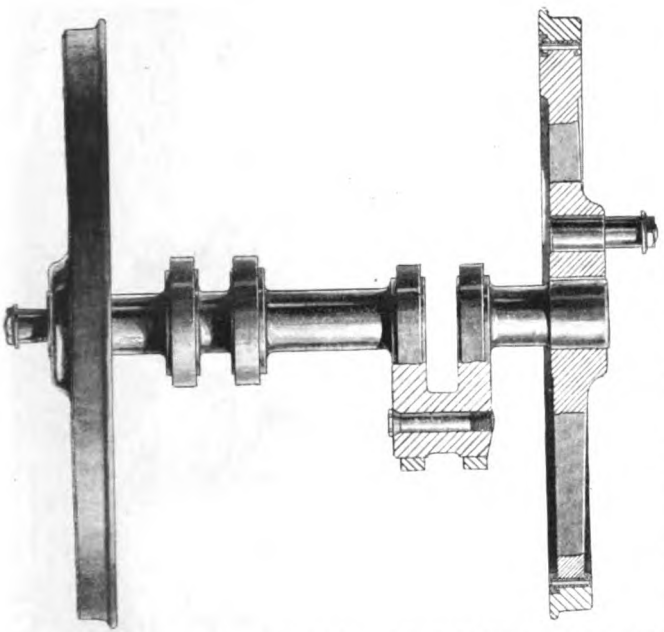

FIG. 60.—CRANK AXLE AND DRIVING WHEELS.

The crank axle is made of steel, all in one piece, the cranks being strengthened by shrinking iron hoops upon them. In some engines strength is given to the web of the crank by making it circular instead of oval. The driving wheels are of cast steel and have separate steel tyres; now usually 3 inches thick and even more. This suits the single frame form of engine. The old double frame is only used now where special strength is needed, and has eight journals on the driving axle besides four eccentrics, and is costly. The single frame has one axle box for each wheel.

In an outside cylinder engine the driving axle is straight, the cranks being on the driving wheels; the valve chests are separate, and the frames are of quite a different shape from those of an inside cylinder engine.

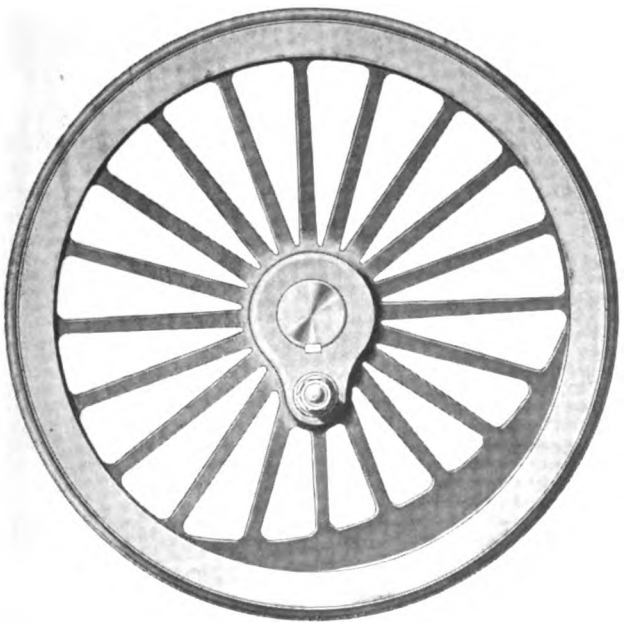

FIG. 61.
DRIVING WHEEL.

The balance on a locomotive driving wheel is a weight spread over a number of the spokes and cast with the rest of the wheel. The coupling rod pin is carried in the boss of the wheel.

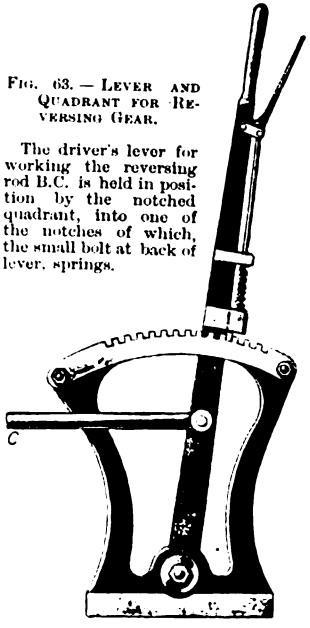

FIG. 63. — LEVER AND QUADRANT FOR REVERSING GEAR.

The driver's lever for working the reversing rod B.C. is held in position by the notched quadrant, into one of the notches of which, the small bolt at back of lever, springs.

A screw and hand wheel are often used instead of the lever, and relay arrangements are coming into use as in marine engines.

Piston valves and flat slide valves with relief frames are now advantageously used in many locomotives. A relief valve to allow air to enter the steam chest and prevent a partial vacuum when the engine is running with the steam shut off, prevents the drawing in of cinders through the exhaust, and also chattering of the valve.

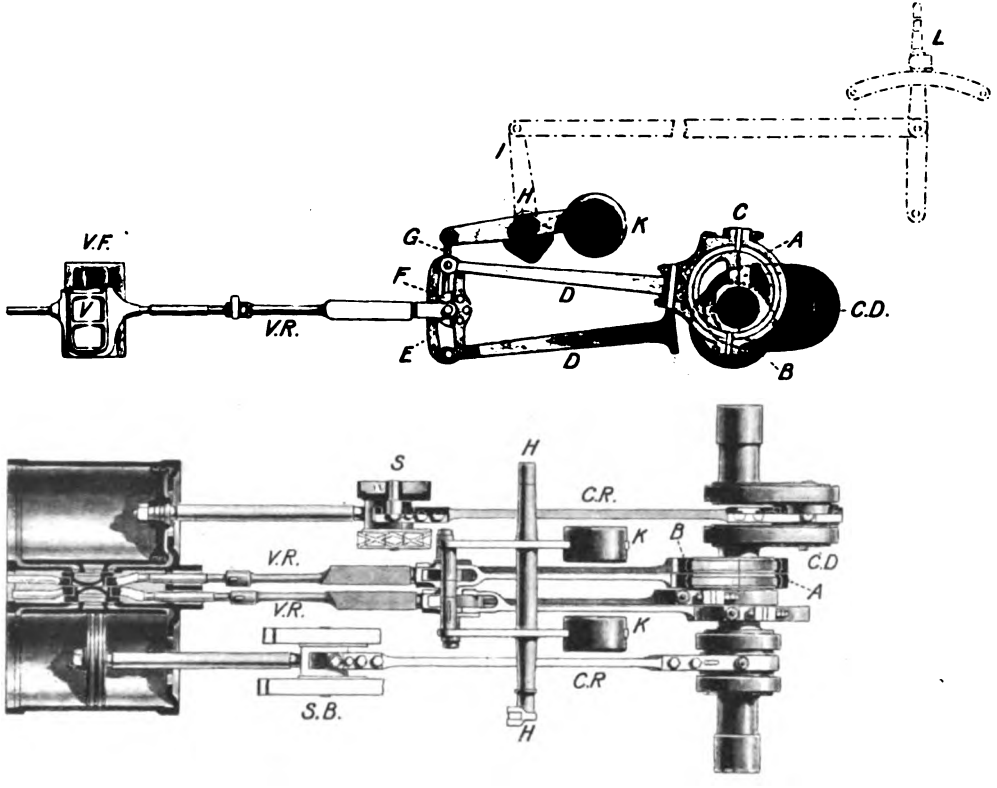

FIG. 62.—INSIDE CYLINDER LOCOMOTIVE VALVE MOTION.

A is a wrought iron eccentric strap with a brass liner, and B is for balance. The lever L turns the weigh bar or reversing shaft H, which is supported on the motion plates, and thus shifts the link E, which is suspended by the pin and bracket F, the weight of the link, &c., being balanced by the weights K. V.R. is the valve rod, with the die block in the link, which passes through a slide box lined with white metal. The length is adjusted by liners at the stud and nut joints of the eccentric rods D.D. to the straps of the eccentric. Metallic packing is now common for all stuffing boxes on locomotives.

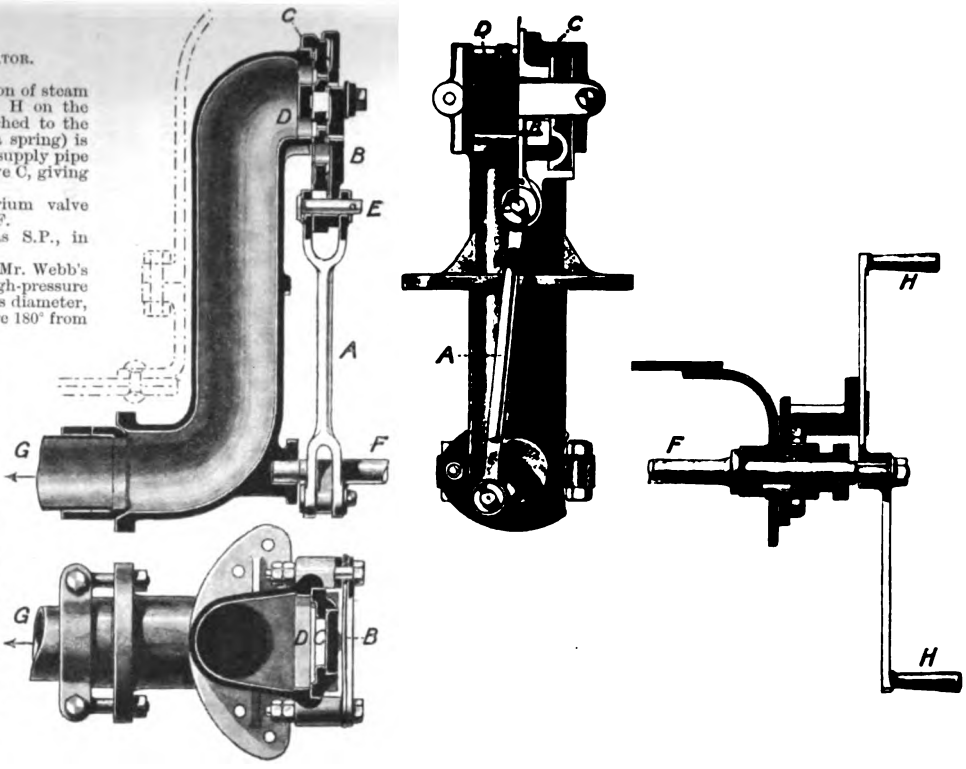

FIG. 64.—LOCOMOTIVE FLAT VALVE REGULATOR.

The regulator valve is to give a gradual admission of steam to the cylinders, and is worked by the handle H on the spindle F, on which is a crank with a pin attached to the rod A. The outer valve B (kept in position by a spring) is first moved, and admits some steam to the copper supply pipe D G, then the pin E comes against the main valve C, giving a larger opening for the steam.

The Ramsbottom regulator has an equilibrium valve worked by an eccentric from a spindle similar to F.

The other end of the steam pipe is shown as S.P., in Fig. 58, going to the valve chest.

Students ought to examine drawings of one of Mr. Webb's four cylinder compound locomotives. Outer high-pressure cylinders 15 inches, inner low-pressure 19½ inches diameter, all of 2 foot stroke. The cranks of the "low" are 180° from those of the corresponding "high." The valve rod of each "low" is worked directly by Joy gear, and it works the valve rod of the corresponding "high" through a lever at the front end. The smoke box is divided into two by a horizontal partition, and each part has its own chimney and its own exhaust blast, so that there is better regulation of the draught through the tubes. Besides the usual bearings there is a mid bearing for the crank axle. It is supposed that at least 20 per cent. of fuel is saved by compounding, and besides, it is only when we exceed two cylinders that it is possible to balance a locomotive (see Chap. XXIX.) even only fairly well, and consequently to run at a high speed without slipping. Compound locomotives with only two cylinders had too little starting power, but this difficulty was removed by allowing steam at starting to be supplied to the low-pressure cylinder through a reducing valve at the same time as to the "high," so that the cylinders work just then in the ordinary way. This is exactly analogous with what is done in traction electromotors, running them either in series or parallel.

CHAPTER III.

THE VALUE OF EXPANSION.

31. BEFORE studying carefully the various forms of valve gear which are in use, the student must get to know **what it is that we want** the gear to effect. Let him imagine four cocks, A_1 and E_1 to admit steam, and exhaust it on the side A, Fig. 5, A_2 and E_2 to admit and exhaust on the side B. Imagine changes to occur slowly, so that we may consider what is occurring at our leisure.

1. E_1 closed, A_1 open, A_2 closed, E_2 open, and let us for simplicity call the pressure in B zero, as if the exhaust were to a perfect vacuum. Let there be steam pressure of 100 lbs. per square inch in A; cylinder 1 foot in diameter, or area of piston 112 square inches, so that the total force on D is five tons. If D moves through 2 feet under this force, the length of the crank being 1 foot, the work done upon D is 11,200 lbs. × 2 feet or 22,400 foot pounds. If we neglect friction and loss of energy by concussion, &c., this **energy is given to the crank shaft.**

2. A_1 closed, E_1 open so that all the valuable 100 lb. steam rushes off, and the pressure in A is 0; E_2 closed A_2 open, so that the pressure in B is 100. As the piston moves over a distance of 2 feet, the work 11,200 × 2, or 22,400 foot pounds, is again done on the piston, and communicated to the crank shaft. Hence in one revolution we have 44,800 foot pounds given to the crank shaft.

Now, some men who know very little of applied mechanics[1] seem to think that somehow the angularity of the crank causes this work

[1] Muscular exertion and fatigue occur when a man merely supports a load without doing work in lifting it higher. Any person who confounds such fatigue with what we call *work* in our calculations is sure to get misleading notions. An iron column may support a load and nobody thinks that work is being done.

to be greatly wasted. In so far as it causes friction and shocks, there is some loss, and the loss due to friction and shocks is serious enough, but this is very different from the imaginary loss of which some men speak. Except for friction, the work done upon the piston is all communicated to the crank shaft, and is given out by the crank shaft. The work done upon the piston per minute, and therefore the horse-power, may be calculated if we know the pressures of the steam on the two sides of the piston at every instant during a revolution of the crank. This power is called the indicated horse-power, from Watt having invented an instrument called an indicator, to register the pressures. The power given out by the crank shaft may be measured by a brake or dynamometer. The brake horse-power is generally about 0·85 of the indicated power in a good engine working at its best load, so we see that the loss due to friction and shock seems large. The loss of energy by friction is often great at slide valves. Observe that we imagine our engine to go slowly, the four cocks being turned at the proper instants by a boy. The indicator would tell whether the boy performed his work properly. If he failed to close two and open another two exactly at the end of a stroke, the indicator would act as a tell-tale.

32. Let us suppose now that the boy cuts off steam before the piston gets to the end of its stroke. There will be less work done on the piston. But let us see exactly what will happen. Suppose he **cuts off steam at half stroke,** only allowing half the quantity of steam to be used. Notice that this steam at 100 lbs. per square inch is not all thrown away when cut off takes place, it continues to act on the piston, although with less force. Its pressure per square inch will vary in some such way as this:—

Travel of piston in feet . .	0	·5	1	1·25	1·5	1·75	2·0
Pressure	100	100	100	80	67	57	50

The steam thrown away then is only 50 lbs. steam, and we have evidently had far more work out of our steam per cubic foot.

Suppose the boy cuts off at **one-third of the stroke**, we shall find that the pressure falls in some such way as this:—

Travel of piston in feet . .	0	0·33	0·67	1	1·5	2
Pressure	100	100	100	67	44	33

Here we have only admitted one-third of the quantity of steam, and yet a fairly good force has been acting on the piston during the whole stroke, for the steam thrown away at the end still has a pressure of 33 lbs. a square inch. Surely a student must see already what it was that Watt discovered in his use of expansion. The thing to study is evidently "how much work is done per cubic foot of steam?" We know that it is greater as we cut off earlier; but how much greater is it?

33. If we could only tell in all such cases as the above what is the *average* pressure during the stroke, we should quickly know what we want. But the student, who has worked exercises like those of Chap. XV., already knows how to find the average pressure in the above cases. Let him take them as exercises, drawing curves to show p the pressure for each point of the travel. Now, the average represents the work done in a stroke, because it has only to be multiplied by 112 square inches, and by 2 feet for the answer to be in foot pounds. I have done the exercise myself, and I find the following results:—The student must do it himself. The volume of the cylinder is $2 \times 112 \div 144$ or 1·56 cubic feet.

1. No expansion. 1·56 cubic feet of steam used in one stroke. Average pressure 100 lbs. per square inch. Work done in one stroke $100 \times 112 \times 2 = 22{,}400$ foot pounds, or 14,400 foot pounds per cubic foot of steam.

2. Cut off at half stroke. 0·78 cubic foot of steam used. Average pressure 85 lbs. per square inch. Work done $85 \times 112 \times 2 = 19{,}040$ foot pounds, or 24,400 foot pounds per cubic foot of steam.

3. Cut off at one-third stroke. 0·52 cubic feet of steam used Average pressure 70 lbs. per square inch. Work done $70 \times 112 \times 2 = 15{,}680$ foot pounds, or 30,200 foot pounds per cubic foot.

The three answers you have obtained show then that by cutting off steam at half stroke we get 70 per cent. more effect; by cutting off steam at one third stroke we get 110 per cent. additional effect to what we get with no expansion.

34. Now, the figures I have given only *illustrate* the good effects of expansion. There are several reasons why they are to be looked upon with suspicion. In the first place the fall of pressure after cut off is assumed to be according to this law;—*when steam has double the volume it has half the pressure, or pressure* × *volume, keeps constant.*

What right have I to assume any such **law of fall of pressure**? My right will be discussed later. It is sufficient to say that when a steam engine cylinder has a steam jacket the pressure does not

diminish so quickly; when a cylinder is only partially protected from cooling, we may find that the pressure diminishes more rapidly, but this is often not the case, and the above law gives a fairly good average rate of fall during expansion. As a matter of fact I use it because it is easy to remember, and gives results which are not very different from those which we obtain when we try to get laws which are more suitable for particular classes of engines.

Again, I took no **back pressure.** This means that I took an engine whose exhaust was a perfect vacuum. Now, if the engine was a good **condensing engine**, the back pressure would probably be 3 lbs. per square inch; subtract this therefore, and instead of the average pressures, 100, 85, 70, we ought to take 97, 82, and 67. It is evident that this will make no great difference in our notions of the value of expansion; but a student ought to work out the actual figures.

Again, if the engine is **non-condensing,** it exhausts into the atmosphere, whose pressure is 14·7. Inasmuch as the passages are not large enough to allow infinitely rapid escape of the exhaust steam, we must take a back pressure greater than 14·7. In practice we find that 16·5 in slow moving engines and 18 in very high speed engines are common; let us therefore take 17 lbs. per square inch as the usual back pressure in non-condensing engines. The average pressures in the above three cases now become 100 − 17, or 83, 85 − 17, or 68, and 70 − 17, or 53 lbs. per square inch. Let therefore a student work out the figures in the following table.

If he will work out exactly in the same way what occurs when we cut off at one-fifth and one-tenth of the stroke, he can complete the table as I give it. Also I have a reason for giving the fourth column of numbers; it is this;—

35. Engineers are much too apt to speak only of **indicated power** and work. We shall see presently that it is very easy to measure with more or less accuracy the true pressure of steam on the piston of an engine by means of the indicator, and from this to calculate the indicated power. But the power actually given out by the engine is less than this; hence a man who sells engines is not so anxious to talk of their brake power, **the power actually given out** which might be measured by a brake or any other form of dynamometer. Also, it is much more troublesome to measure the power actually given out, especially in large engines. But the student cannot keep too well before his eyes the fact that it is energy actually given out by the engine, which it is of most importance to increase. Now, the friction of the engine may be said (see Chap. XVI.) to act exactly in the same way as a back pressure, and as a first

approximation we may take the friction to be represented by a back pressure of 10 lb. per square inch on the piston, in addition to the real back pressure as shown on an indicator diagram. This is what I have done in column 4, subtracting 27 lbs. per square inch from 100, 85, 70, 52, and 33, which are the average pressures as computed on the assumption of no back pressure.

		Work done per Cubic Foot of Steam.			
	p_m	No back pressure.	Back pressure 3 lbs. per square inch.	Back pressure 17 lbs. per square inch.	Back pressure 27 lbs. per square inch.
No cut off	100	14400	13900	11900	10500
Cut off at half stroke	85	24400	23600	19500	16700
Cut off at one-third of the stroke	70	30200	28900	22800	18500
Cut off at one-fifth of the stroke	52	37300	35200	25100	18000
Cut off at one-tenth of the stroke	33	47400	43100	23000	8600

Column p_m gives the mean pressure during the stroke, assuming no back pressure. From this each back pressure must be subtracted, to get the true average pressure which must be multiplied by the area of the piston (112 square inches) and the length of the stroke (2 feet). This is the work done by the steam admitted. When we cut off at one-fifth of the stroke, the volume of steam admitted is one-fifth of the whole volume of the cylinder. The volume of the cylinder is $2 \times 112 \div 144$ cubic feet.

36. It is often assumed that an elementary student can understand quite easily all sorts of abstruse principles of thermodynamics and other parts of physics, whereas the simplest calculations of the above kind are looked upon as belonging to the higher study of the steam engine.

But this book is written to guide a teacher who wishes to make his students really think about the fundamental facts, and I wish it to be understood that the average student has no difficulty whatsoever in making the above simple calculations if he knows about force and work; that is, if he has studied a little applied mechanics. When there are a number of students, let them be divided into sets of three or four. One set of men takes the initial pressure of the steam as 50, the next as 100, the next as 150, the next as 200 lbs. per square inch, and instead of cutting off merely at one-half, one-third, &c., there ought to be cutting off at all sorts

of other periods of the stroke, so that all the students may help in producing a table of numbers giving valuable information. I have found this exercise one of enormous value. The drill-sergeant kind of teacher will get possession of some such very complete table, and show it to students who have not calculated it. If my system takes root I can imagine text books written, by the mere reading of which a man will be supposed to study the subject. He will look at some such elaborate table; he will even think that he understands it perfectly, and unfortunately it will be difficult to prevent his passing written examinations. It is truly wonderful what difficult looking questions men may answer, and get full marks for in examinations, when, all the time, they have no real knowledge of the most elementary facts about the subject.

37. The student will now examine his results. He will see that in:

I. Condensing engines. The **indicated energy** per cubic foot of steam is greater and greater with more expansion, as far as the above table goes. He will notice also that in every case the condensing engine has an advantage over a non-condensing engine.

II. Non-condensing engines. The **indicated energy** per cubic foot of steam is greater when we cut off at $\frac{1}{3}$ than when we cut off at $\frac{1}{10}$ of the stroke, and indeed there is no great difference between cutting off at $\frac{1}{3}$, $\frac{1}{5}$, or $\frac{1}{10}$ of the stroke.

III. Non-condensing engines. The **brake energy** per cubic foot of steam is not very different for cutting off at $\frac{1}{2}$, or $\frac{1}{3}$, or $\frac{1}{5}$ of the stroke, but is decidedly less when we cut off at $\frac{1}{10}$ of the stroke; in fact, less than if we had no expansion.

IV. Notice that what I say about indicated energy in non-condensing must be pretty much the same as for brake energy in condensing engines. Indeed, taking 14 lbs. as the extra or frictional back pressure in a small condensing engine is probably taking too little, because the driving of the air and feed and circulating pumps in such an engine is a large addition to the resistance.

When therefore the student hears some foolish unpractical man talking of the virtues of unlimited expansion, let him cite some such figures as we have given above. Don't let any one talk of the discrepance of theory and practice when what he calls his theory is based on no natural facts. The old Cornish pumping engine, which is still found to work satisfactorily, seems not to have ever cut off earlier than $\frac{1}{4}$ of the stroke, and Watt himself usually cut off at from $\frac{1}{2}$ to $\frac{2}{3}$ of the stroke.

38. But it will be found in Chapter XVII. that there are three

other drawbacks upon the numbers (like those given in the second column of our table), often cited as exhibiting the virtues of great expansion, and these are :—

First. By greater expansion it may be that we do get greater work per cubic foot of steam; but we are using a large cylinder (and therefore a large engine) for comparatively little total power. Surely mere economy of steam is not the whole of the economy which ought to be studied. Interest and depreciation on **cost of an engine** are important.

Second. The actual quantity of fresh steam entering the cylinder is greater than what we stated above, because of the **clearance space**.

Third. When we cut off at $\frac{1}{2}$ or $\frac{1}{4}$ of the stroke, the quantities of steam used are really not represented by $\frac{1}{2}$ and $\frac{1}{4}$ of the cylinder volume. When we have greater expansion our cylinder is colder before steam is admitted, and a good deal of the newly admitted steam is condensed in heating up the cold cylinder. When therefore we indicate less steam we are actually wasting more, and thus there are two reasons for the percentage loss being greater. As Watt knew very well, this **condensation of steam** entering the cylinder is the most serious trouble before the maker of steam engines. It depends upon the range of temperature or the difference in temperature between admission and exhaust steam and upon the time that elapses before cut off, and its effect is less at higher speeds; engines going at 400 revolutions per minute have only about half the relative condensation of engines going at 100 revolutions per minute. To diminish the range of temperature it is thought well to let the steam expand in **two or three cylinders**. Thus in Fig. 65 we have a triple cylinder engine. The steam admitted to H, the high pressure cylinder is at 200 lbs. per square inch, and the exhaust is about 75. This exhaust steam enters a receiver, A, a mere space kept warm, as indeed the cylinders also are, by steam jackets. In the most recent engines the volumes of the connecting pipes are thought to be sufficient *receiver* volumes as shown in the figure. In each receiver the pressure varies somewhat, depending upon the size of the space. Steam leaves A and is admitted to a second or intermediate cylinder I at 70 and exhausts from I at about 27 lbs. per square inch into another receiver, B. Steam leaves B and is admitted to a third or low pressure cylinder L, at 25 lbs. and exhausts to the condenser. One cubic foot of steam admitted to H becomes 16 cubic feet before it is released from L. Expansions of 1 to 20 are common and the volumes of the three cylinders are usually as

1 : 2·7 : 7. If this great expansion occurred in only one cylinder it would mean a very great range of temperature of the cylinder, and therefore much condensation of fresh steam every time of admission.

Any student who wishes at this early stage to get **a rough approximation to the effect of condensation** in a well-arranged cylinder, that is, a steam jacketed cylinder working under very good conditions, at 100 revolutions per minute, will find that if he assumes that condensation produces pretty much the same effect as if we had a back pressure of 10 lbs. per square inch, in addition to the above-mentioned back pressures, he will arrive at numerical results which do not badly represent the results of experiments. I need hardly say that this is given as only a very vague direction to students, because the conditions of even well-arranged jacketed cylinders vary very

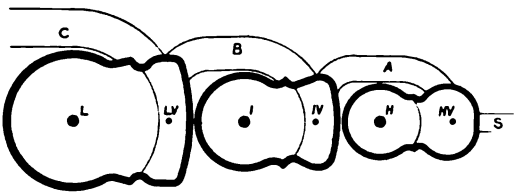

FIG. 65.

Plan of modern three cylinder vertical engine, working three cranks, 120° apart. The pistons, &c., are of the same mass.

Steam comes from the boiler by S, and is admitted by a piston valve H V to the "high" cylinder H, exhausting by the pipe A. This steam from A is admitted by a double ported slide valve IV to the "intermediate" cylinder I, exhausting by the pipe B. This steam from B is admitted by the double ported slide valve L V to the "low" cylinder L, exhausting by the pipe C to the condenser.

greatly. It will be worth while for students to complete the above table by adding a new column of numbers labelled "Back pressure 37 lbs. per square inch," as giving a fairly good general notion of the brake energy per cubic foot of steam, when condensation in well-arranged cylinders is taken into account in non-condensing engines.

39. Now let a student imagine himself to be the boy who is in charge of the four cocks. Unless the engine moves slowly he will be quite unable to open and close the cocks exactly at the right times. But let us consider what are these right times.

He is told, let us suppose, to cut off steam exactly at one-third of the stroke. Notice that he ought to cut off with **great quickness** when the proper time arrives. Why? Because it may be shown by calculation that he ought to be admitting steam either at its full steam chest or boiler pressure, or not at all, and if he closes the cock slowly the steam will be *wire-drawn* as it is called. It is for the same reason that the steam pipe and passages must be wide.

Again, a boy of judgment would **admit steam** just a little before the end of the stroke, because his passages are not infinitely large; he would **release steam** also before the hypothetical time, because at the very end of the stroke the back pressure ought to be as small as possible, and the exhaust passages are not infinitely large. It is exactly for this reason that if a theatrical performance is to occur exactly at 7 o'clock the doors must be opened well before 7, and if everybody is to be out of the theatre at 11 o'clock they must begin to go well before 11 o'clock. And the quicker the speed of the engine the earlier must the admission and release take place and the more sharply must the boy cut off his steam. There is much judgment required also in regard to the **closing of the exhaust.** At a certain period in the back stroke the steam is no longer allowed to escape, the exhaust valve is closed; what steam remains in the cylinder is squeezed smaller and smaller, and it therefore increases in pressure and acts as a sort of cushion, which helps very materially in bringing the massive piston and other moving parts to rest, for it is to be noticed that the piston is at rest at the ends of its stroke and is moving very quickly in other positions, and in Chapter XXIX. it will be found that the bringing of these parts to rest so quickly is a serious tax upon the strength of the fastenings, &c. Now a cushion of steam at the end of the back stroke is a wonderful help. Besides, if the cushion of steam could only be squeezed up to the pressure of the entering steam, it is to be noticed that the clearance space would not cause the loss that it usually causes in needing to be filled with fresh high pressure steam.

If he thinks of one side of the piston only it is quite enough for one boy. He must think of **doing four things** exactly at the proper instants, and these four things may be called: *Admission* just before the beginning of the stroke. *Cut off* to be very quick and at the right instant. *Release* well before the end of the stroke. *Compression or cushioning* to begin well before the end of the back stroke.

About 160 years ago, when the oldest Newcomen pumping engine moved very slowly, boys did perform the proper operations, and there is a story told (it is probably untrue, but this is of no consequence to my present purpose) about a boy named Humphrey Potter, who, when in charge of the engine-room, much desired to play marbles upon the engine-room floor, which was well suited to that interesting game. A friend used to come and jeer at him, playing marbles in his sight. Thereupon he invented **the first valve motion.** His master one day entered the engine-room and saw the guileful Humphrey playing marbles. His first duty, that of punishing

Humphrey, was strenuously performed, and only then did he observe that the engine was faithfully performing its duty and that the ingenious Humphrey had so arranged certain sticks and strings that the valves were opened and closed at the proper periods by the automatic action of the engine. Ask not how the inventor was rewarded. ||Had he not already had all the reward that a true inventor ever gets, the swelling emotion of seeing his invention a success ?||

40. Four cocks or valves were employed in the old engines, and they are employed still in the best stationary engines for this reason; the steam passage and valve ought not to be the same as the exhaust passage and valve, because the surfaces are pretty large, and they are greatly heated by the incoming steam, and greatly cooled by the exhaust steam. There ought therefore to be a steam passage and steam valve for each end of the cylinder, and also an exhaust passage and an exhaust valve for each end of the cylinder, if we aim at greatly reducing cylinder condensation, and if we do not mind extra expense, and when we use expensive Tappet motions, and Corliss and other trip gears we can perform the four operations, admission, cut off, release, cushioning, with great accuracy in the ways most desired.

One of the most important things to notice about a four (mushroom) valve arrangement is this, that the **leakage of steam** past the valves must be exceedingly small compared with what it is past a moving slide valve. It is almost certain that much of what is called the missing water in a cylinder using a slide valve is really direct leakage past the valve as well as past the piston, and not condensed water as is usually supposed.

41. I have said that it is sufficient for many purposes to say that the **friction** of the steam engine and also the **effect of condensation** and leakage may be represented by a back pressure. My justification for this is given in Chap. XVII. If the student is satisfied later, with the correctness of these assumptions, let him note the great simplicity which they introduce in considering what is the most economical ratio of cut off. They are sufficiently correct for us to say in general, that, considering them as part of the total back pressure, the best value of r, the total ratio of expansion is

$$\frac{\text{Initial pressure of steam}}{\text{Total back pressure}}$$

and this is true for single or double or triple expansion engines, if r is the total ratio of expansion.

The more usual ways of dealing with friction and the missing quantity will be described in Chap. XVII.

42. Important exercise. The student knows how, by actually drawing a hypothetical diagram of pressure, to find the average or effective pressure p_e during the stroke. Thus when cut off is at one-third of the stroke he found that p_m is 70 per cent. of the initial pressure,[1] and he subtracts the back pressure from this to get the average pressure. Let him work the following exercise very carefully.

An engine whose piston is 12 inches diameter or 112 square inches in area, has a crank 1 foot long. The steam is always cut off at one-third of the stroke. The back pressure is 17 lbs. per square inch. Sometimes the boiler pressure is low, sometimes it is high; take the following as the initial pressures of steam in the cylinder, 140, 120, 100, 80, 60, 40 lbs. per square inch. The engine goes at 100 revolutions per minute. Find in every case the hypothetical horse-power I and the weight W of indicated steam per hour.

The student is still neglecting cushioning and clearance, but he is about to obtain results which are of great practical use when we compare them with one another, although they differ in obvious ways from the results of actual trials. The volume of the cylinder at cut off is $\frac{112}{144} \times 2 \div 3$ or 0·52 cubic feet. I have taken from the table, Art. 180, the volume u in cubic feet of 1 lb. of each of the kinds of steam we here deal with, so that we calculate easily the *weight* of steam used per stroke, as there are $100 \times 2 \times 60$ strokes per hour, and so we calculate W the weight of steam per hour. The average pressure multiplied by 112×2 is the work done in one stroke. Multiply by 200 and divide by 33,000, and we find the horse-power done on the piston.

Now plot W and I on squared paper, and see if you obtain such a law as

$$W = 14{\cdot}2\ I + 400.$$

Our hypothetical conditions are different in many ways from actual conditions. The most important is that there is great leakage past a slide valve or a piston when it is in motion; also there is much condensation going on before cut off in a cylinder, also there is loss due to the clearance. It is then quite a wonderful thing that when we regulate in the above way, letting the initial steam pressure alter, but not altering the cut off, the weight of steam per hour and the

[1] He took an initial pressure of 100; he must prove that this is so for any initial pressure.

indicated horse-power when plotted on squared paper give points lying in a straight line. This is the **Willans' law,** which is found to hold in single cylinder, and in compound and in triple cylinder engines, condensing and non-condensing, single or double acting, with and without steam jackets. It is a law of great practical value to us in our calculations.

This calculation is one which ought to be made by the very beginner, and he ought to repeat it for a back pressure of 3 lbs. per square inch, so as to be able to compare condensing and non-condensing engines. See Arts. 158 and 161.

p_1 the initial pressure.	p_m or $0{\cdot}7\ p_1$.	p_e or $p_m - 17$, the average effective pressure during the stroke.	I, the indicated horse power.	v, the volume in cubic feet of one pound of steam.	Weight of steam used in one-stroke. lb.	W, Weight of steam used per hour lb.
140	98	81	110	3·2	0·162	1,960
120	84	67	91	3·7	0·140	1,690
100	70	53	72	4·4	0·118	1,400
80	56	39	53	5·5	0·095	1,150
60	42	25	34	7·0	0·075	880
40	28	11	15	10·3	0·051	610

If the student will add to this table another column showing $W \div I$, he will see why it is that such an engine is less efficient when its load is light.

CHAPTER IV.

THE INDICATOR.

43. In Art. 30 we showed how we imagined that the pressure of steam might alter during the motion of a piston. We desire to know how the pressure of the steam does alter in an actual engine and so we use the indicator, which is just as important in giving us information about what goes on inside a cylinder as the physician's stethoscope about the inside of a patient's body. Before Watt invented it (keeping it secret for a long time) he had already used a pressure gauge on the cylinder, and his engines moved slowly enough for him to observe with his eyes how the pressure altered as the piston moved; but modern engines revolve so fast that a self-recording instrument is absolutely necessary. The indicator has a little barrel or cylinder like *Cy* of Fig. 73, which communicates with the main engine cylinder through a short pipe from *B*. The pressure of the steam causes the piston *P* to rise by an amount which is determined by the stiffness of a spiral spring because there is always atmospheric pressure above it. The piston rod acts on the lever *F. P P*, and hence the rise of the pencil *P P* indicates the pressure of the steam to scale. It is interesting to watch the jerky up and down motion of the pencil *P P* when it is indicating the pressure in an ordinary steam cylinder. The barrel *D*, on which a piece of paper has been wrapped, rotates for about $\frac{3}{4}$ of a revolution and back again, as the cord or cat-gut, which is wound round it near the bottom, is pulled and let go again, and so we see that if the end of such a cord gets a miniature motion of the piston of the steam engine, a pencil line is drawn upon the paper like that which we see in Figs. 66 and 70, up and down position indicating pressure at any instant, horizontal position indicating position of the piston of the steam engine at that instant. A diagram is usually from $2\frac{1}{2}$ to $3\frac{1}{2}$ inches long and about $1\frac{3}{4}$ inches high. Before one little sheet of paper is replaced by a fresh one, the indicator cylinder at *B* is made to communicate with

the atmosphere so that the pencil may draw a straight line like *AA* of Fig. 66. This line is called **the atmospheric line.** It tells us the position of the pencil when the pressure was atmospheric, and we know that pressure is to be measured at right angles to it.

Figs. 67 and 68 show two ways

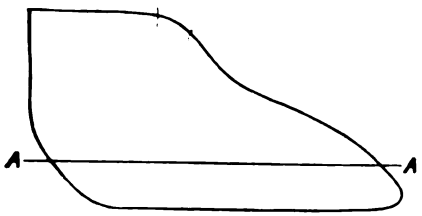

FIG. 66.—INDICATOR DIAGRAM, CONDENSING ENGINE.

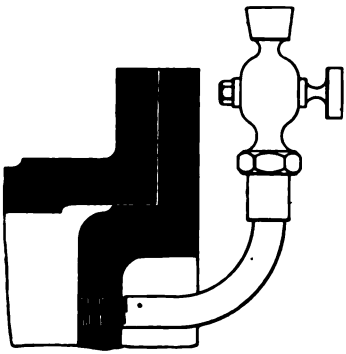

FIG. 67.—METHODS OF CONNECTING THE INDICATOR.

in which the indicator is usually connected to the cylinder: unless we are sure that the load is very steady, two indicators must be employed. Places too close to steam ports are to be avoided. Plugs are screwed in the holes when the indicator is not being used. In Fig. 69 one indicator, *E P D*, is placed so that by means of the three-way cock *C* (shown also at *C* and *D* Fig. 73) it may communicate by the pipe *C G* to one end of the cylinder, or by the pipe *C H* to the other end, or else with the atmosphere. These pipes must not be less than $\frac{1}{2}$ inch internal diameter.

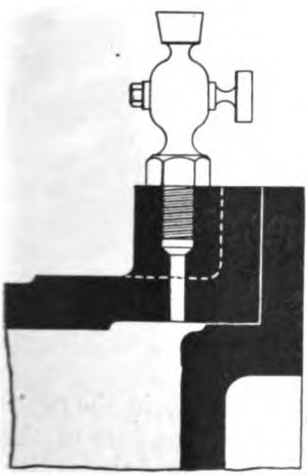

FIG. 68.

Now inasmuch as the pipes *C G* and *C H* are of some length, and as condensed water sometimes gets entangled in them, we do not altogether like this arrangement because of the greater chance of error. It is, however, very convenient, because we get diagrams from the two ends of the cylinder on one sheet of paper, as shown in Fig. 70 or 78 for example.[1]

[1] Let a student think this matter out for himself. Suppose there is a long tube, part of which is filled with water. Say the length A is steam whose pressure is

A (Fig. 73) shows the outside appearance of a **Crosby Indicator,** and *B* shows it in section; *D* also seen in Fig. *A* is a hollow brass cylinder on which a sheet of paper may be quickly placed or taken away, and students ought to practise doing this. It will be noticed

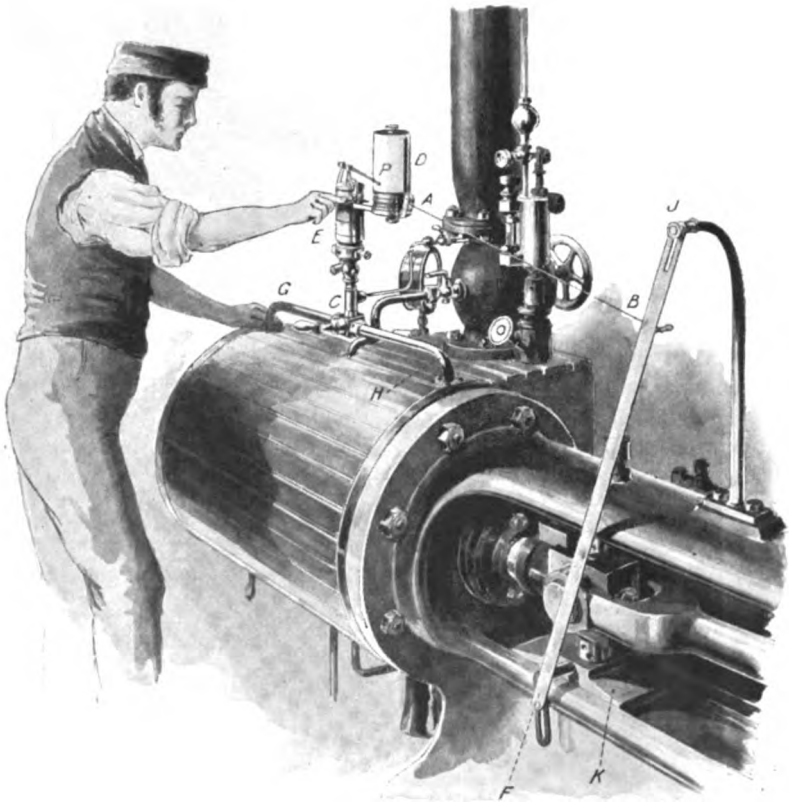

FIG. 69.—THE TAKING OF INDICATOR DIAGRAMS.

that by pulling the cord *B A*, Fig. 69, and letting it go again, the paper revolves under the pencil. Now *BA* is pulled by some part of the engine which gives to the paper an exact representation of the motion of the piston of the engine. Thus in Fig. 69, *B* is a point in a lever,

rapidly altering; the length B is water; the length C is, say air. Note that the rapidly altering pressure of A is not at any instant the same as the pressure of C at the same instant, and hence if it is C that communicates with the indicator the record must be wrong. There is less likelihood of this happening if the pipes have sufficient slope to let all water drain back easily from them into the cylinder. It is easy for a teacher to arrange an apparatus to illustrate this source of error.

the lower end of which F gets the horizontal motion of the cross head K, while it moves up and down a little in a slot, the end J being fixed. Again by the method of Fig. 71, A is pulled by a point B of the lever DBF, D moving about a fixed centre, and F getting motion from the crosshead E by means of the rigid rod EF, or as in Fig. 72 E is the trunk end of the piston of a gas engine moving F in the direction EF. The point B pulls the cord BA. Other ways of giving to the paper barrel a motion which is very nearly a miniature of the motion of the piston of the engine will strike the thoughtful student, and he will find it an excellent exercise to test by skeleton drawing what is the amount of inaccuracy in each method.

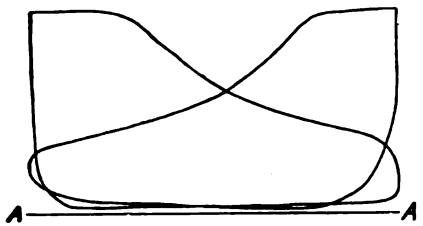

FIG. 70.—SPECIMEN CARD, NON-CONDENSING ENGINE.

If the student will reflect a little he will see that the effect of the spring DS, which causes the paper cylinder to come back when the string allows it, together with the **inertia of the cylinder,** causes the pull in the string to vary a good deal, and therefore the string alters in length; consequently the paper does not get a true imitation of the motion of the piston. This is one of many defects of the indicator, and students will find it instructive to try a rather yielding kind of string so as to exaggerate the evil. In practice some people now use steel wire or steel strip instead of string or catgut.

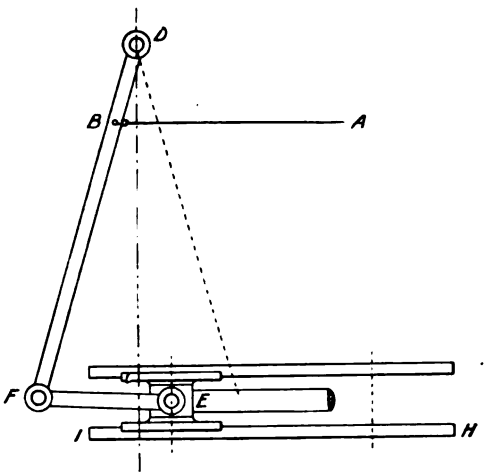

FIG. 71.—HOW THE CORD IS CONNECTED.

44. The student ought to make a study of any indicator which he may have opportunity to examine. If he has a choice, let him choose one of the very latest forms suitable for use with engines running at high speeds. If such an instrument is capable of showing pressure

to a good scale, at high speeds, the very greatest care must have been given to its design, and it is worthy of study as a specimen of good instrumental construction. The Crosby Indicator of *A*, *B*, *E*, Fig. 73, is of good design.

Cy is the outside cylinder. *Cy. P.* the cylinder proper in which the piston *P* moves steam tight and yet without friction. *Cy. P* is

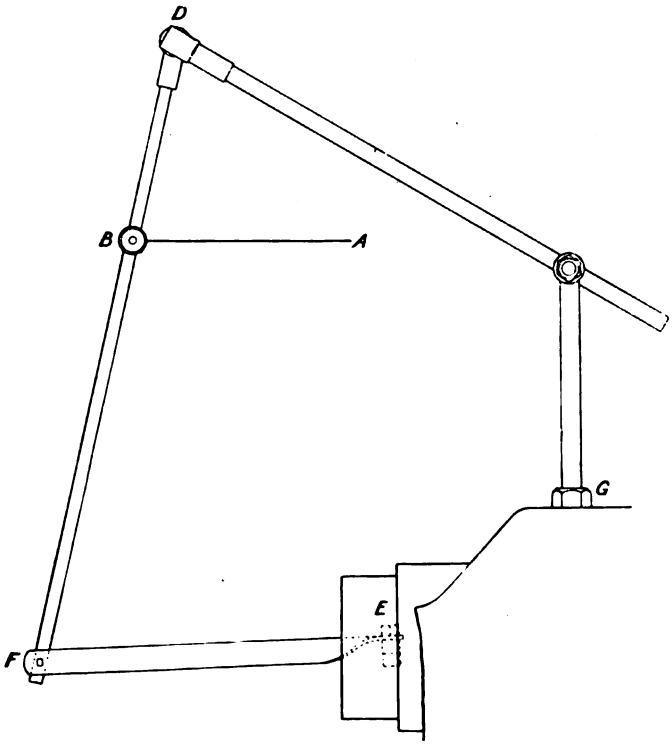

FIG. 72.—HOW THE CORD IS CONNECTED TO A GAS ENGINE.

free below to expand and contract. The space between *Cy. P* and *Cy.* is a sort of steam jacket.

Like all the other moving parts of this indicator the piston *P* is made **as light as possible.** It is of thin solid steel hardened and ground to a slack fit for *Cy.P.*, with shallow channels on its outside for gathering condensed water which forms an excellent packing, with very little friction and practical steam tightness. Its central socket in one piece with the rest extends upwards more than downwards. The lower part receives the piston screw *P.S*; the upper part is slotted

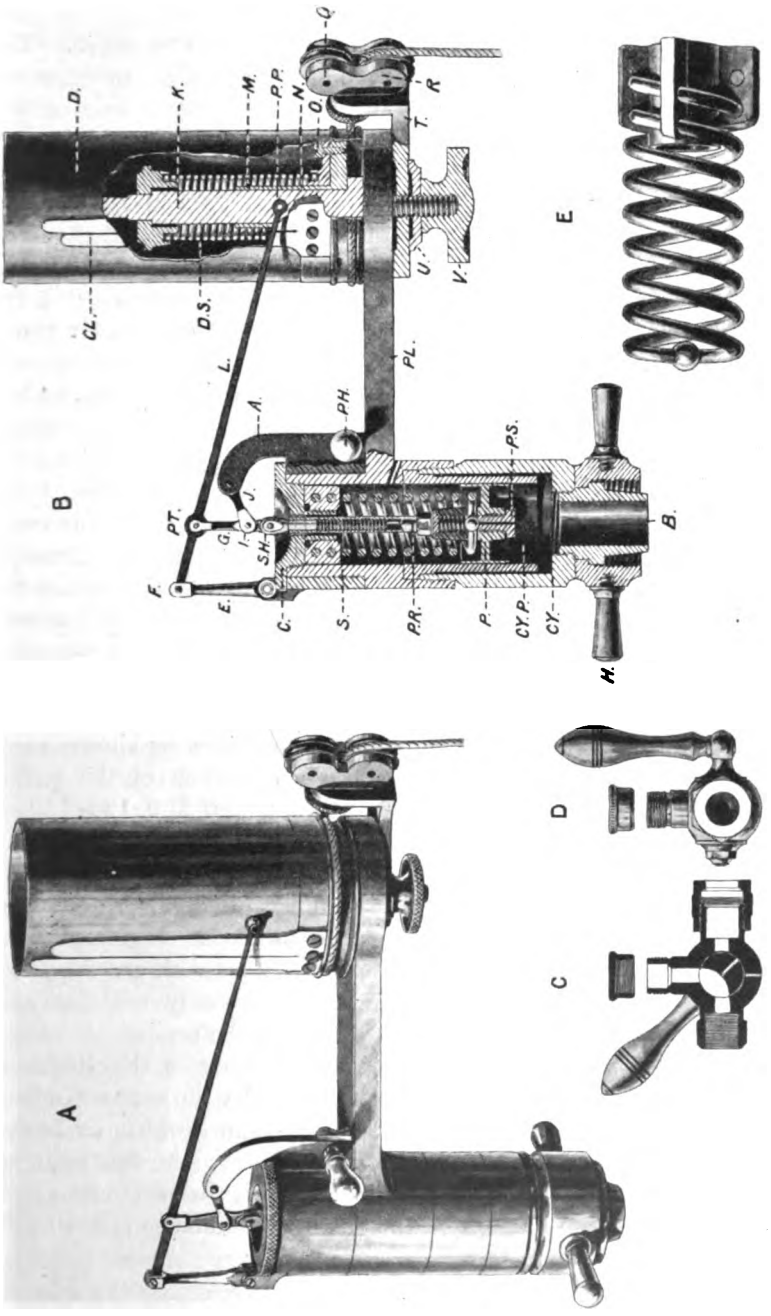

FIG. 73.—THE CROSBY INDICATOR.

to receive the bottom of the spring with its central ball; the hollow steel piston rod is screwed in at the top making a firm job. The swivel head *S H* is screwed into the top of the piston rod more or less depending on the required level of the atmospheric line of the diagram.

The cap *C* bushed with steel, screws into the cylinder and into the head of the spring and holds the sleeve *S*, &c., in place. The sleeve turns freely on the cylinder and carries by the arm *A* the fixed end of the link *J I*, which, with the links *E* and *G* and the lever *F. P T. P P* form the parallel motion, which causes the pencil point *P P* on the lever *F. P P* to have a vertical motion, which is six times that of *S H*. In fact the horizontal motion of *F* destroys the horizontal motion of *P P*. There is atmospheric pressure above the piston, and the pressure below it is that which we wish to indicate.

The piston rises through a distance which is proportional to the pressure in excess of the atmospheric pressure, or it falls if the pressure underneath is less than atmospheric. It is very important to test with a good pressure gauge if the motion of the pencil really indicates pressure to the proper scale: the student will readily see how this may be done. If the spring is altogether removed it is easy to move the pencil up and down on the paper, and in this way test if its motion is truly at right angles to the direction of the atmospheric line.

The springs, made each of one piece of steel wire as shown at *E*, are supplied of such stiffnesses that 1-inch motion of the pencil represents either 4, 8, 12, 16, 20, 30, 40, 50, 60, 80, 100, 120, 150, or 180 lbs. per square inch, and a student ought to become expert in altering from one spring to another. Notice that the Crosby spring is right and left-handed, and it therefore has no tendency to press the piston laterally against the cylinder when it is compressed. Boxwood scales of pressure to measure diagrams with are supplied, to correspond with the springs, and the box usually contains also screwdrivers and other tools which are likely to be needed.

The student ought also to examine a drawing of the Richards Indicator, which he can now have no difficulty in understanding. It dates from 1862, and is still in use for engines which make not more than 130 revolutions per minute. Observe in this as in all other good indicators that the cylinder in which the piston moves is separated by a steam space from the outside case, and so is not likely to condense steam inside it.

45. The errors of indicators are due to:—

1. The stiffness of the spring alters with temperature, and

the average temperature of the spring is not known, and is different in different cases. The error due to this cause may be as much as 2 per cent., but a careful man may reduce it to almost nothing.

2. Through defects in the parallel motion and in the spring itself, the vertical motion of the pencil may not be exactly proportional to the pressure in all positions. This may be tested at one or two steady pressures, marks on the paper being tested by the scale, and compared with readings of a good pressure gauge.

3. Bad fitting of the parts through bad workmanship or much use.

4. The inertia of the paper barrel and weakness or strength of its spring, and also friction, combined with the yielding of the cord sometimes causing the travel of the paper to be too great, sometimes too little; in both cases the motion of the paper being no miniature of that of the crosshead of the engine.

5. Friction, whether at joints of the parts moved by the piston or between the pencil and paper.

46. By means of *P H*, which is on the easily fitting sleeve *P H A S*, we cause the pencil to touch the paper or we can withdraw it. In a modern engine going at from 150 to 300 revolutions per minute, it is hardly possible to make the pencil touch the paper and to remove it without tracing out several diagrams. If the contact is continued and if there is a steady load on the engine, the pencil will trace out the same diagram many times, and when the indication (sometimes called "a card") is removed, the paper seems to have only the one line upon it. After allowing the indicator to be warmed up, and seeing that the paper barrel is not clicking against its stops, putting knots in the cord if necessary to get it to the proper length, the **usual operations** as in Fig. 69 are:—1. Unhook cord *A B* or use the disengaging device supplied on some indicators; take off old card; put on a new blank paper (you will become expert in this by practice). 2. Turn the cock *C* so that there is atmospheric pressure underneath the indicator piston; touch paper with pencil and draw it back. 3. Turn cock *C* so as to communicate with one end of the cylinder, touch paper with pencil and draw it back. 4. Repeat for other end of cylinder. Now disengage cord and remove the paper or card. It will perhaps look like Fig. 78 if the engine is a condensing one, *A A* being the atmospheric line. It will perhaps look like Fig. 70 if the engine is non-condensing, *A A* being the atmospheric line. It is usual at once to write on a diagram the time (date, hour, and minute) at which it was taken, and such other information as may be known, such as the number of revolutions of the engine per minute, the

description of the cylinder, &c. Sooner or later these ought to be **written on the diagram:** 1. The boiler pressure at the time. 2. The condenser pressure or vacuum. 3. The scale to which pressure is represented. 4. The diameter and area of the piston and piston-rod. 5. The length of the stroke or twice the length of the crank. 6. Revolutions per minute. 7. All information as to the machines being driven by the engine which may be necessary. It is evident that the information on the card from a locomotive or marine engine, and especially from any particular end of a particular cylinder of an engine, must be very varied to be complete. It is very seldom made sufficiently complete, and hence come doubts and misrepresentation. It is well for the young engineer to learn at once that there is hardly any little scrap of information bearing on the test being made that ought not to be noted at the time.

47. If the spring is not stiff, it will represent pressure to a sufficiently large scale, but at a high speed of engine there will be ripples due to the **natural vibration** of the indicator itself. If these ripples get to be too great, as in Fig. 74, a stiffer spring must be substituted. Some men press the pencil firmly on the paper; this kills the ripples, but the **friction destroys the accuracy** of the diagram. Can the student suggest why it is that solid friction like this always makes the **diagram too large?** On admission the pencil rushes up too high, and it stays too high because of the solid friction; it rushes too low and it stays too low during the exhaust for the same reason. Some of the most interesting experiments for students who have a small steam engine to work with are these:—

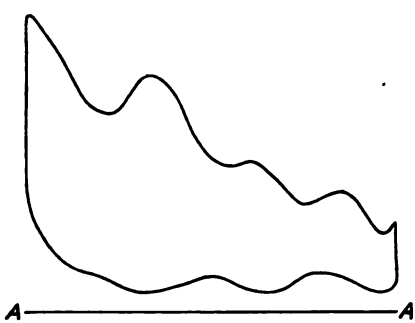

FIG. 74.—SHOWING EFFECT PRODUCED AT HIGH SPEED.

1. Without changing the valve motion, let an engine run first slowly, then faster and faster, and take a diagram at each speed. Note how the wire drawing increases as the speed increases, and how important it is to release and admit well before the end of the stroke at the higher speeds.

2. Note how ripples begin at high speed, and how they become great enough to upset the diagram altogether, so that a stiffer spring must be used.

3. At some slow speed, alter the valve gear in various ways, in each case noting the character of the diagram.

48. Vertical distances represent pressure to a scale which depends upon the spring that is used. Let a line *O O* be drawn parallel to the atmospheric line *A A*, and below it at a distance which represents 14·7 lbs. per square inch; then distances measured vertically from *O O* will represent absolute pressures.

The **information given us** by an indicator diagram, if it accurately represents pressure at every part of the stroke on one side of the cylinder, is very varied and valuable.

1. It tells us if our valve motion is doing its duty, admitting steam just before the beginning of the stroke at *B*, cutting off without too much wire drawing at *D*, releasing at *E* well before the end of stroke, and cushioning at *H*.

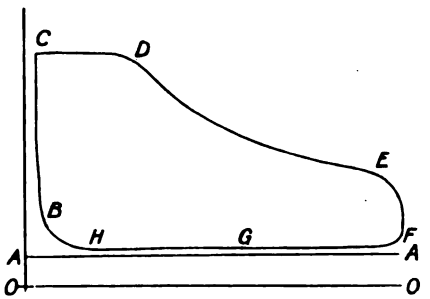

FIG. 75.—SPECIMEN DIAGRAM NON-CONDENSING ENGINE.

2. If the pressure of the initial steam at *C D* is very much less than that of the boiler, there is a loss due to the smallness of the supply-pipe or its length.

3. If the pressure in the back stroke *F H* is not nearly atmospheric in Fig. 75, or nearly the same as that of the condenser in Fig. 78, the exhaust passage is not large enough, or else there was much steam condensed during admission, which is now boiling away during exhaust, and so maintains a high exhaust pressure.

4. The shape of the expansion curve *D E* gives us very valuable information which I do not care here to enter upon.

5. It enables us to calculate the indicated horse-power.

These are only a few of the things about which the indicator diagram gives us information. The indicator may be applied also to the valve chest or the condenser.

Questions.—1. If you notice that the admission pressure at *C* is much less than the boiler pressure, what do you infer? 2. If you notice that the pressure at *D* is considerably less than at *C*, is this more likely to occur at high speeds, and why? A gradual fall from *C* to *D* is very different from what is shown in our figure. 3. If the pressure at *F* is much greater than *H*, what may we infer?

In the diagram Fig. 75, the admission begins somewhere

about B, the cut off about D, the release at E, and the cushioning begins at H.

Sometimes from B to D is called the steam line or line of admission, $D\ E$ the expansion part of the diagram, $E\ F\ H$ the exhaust line, and $H\ B$ the cushioning or compression.

49. To calculate the indicated horse-power, that is the mechanical power exerted by the steam on the piston, we had better neglect here the area of the piston rod. Let A be the cross sectional area of the cylinder in square inches. Consider the space on the left-hand side of the piston (Fig. 5). If Fig. 76 is the diagram, we see that we must find the average value of all such absolute pressures as are represented to scale by $B\ C$ ($C\ C$ is the zero line of pressure drawn to scale 14·7 lbs. per square inch below the atmospheric line $A\ A$) during the forward or ingoing stroke. We must find the average

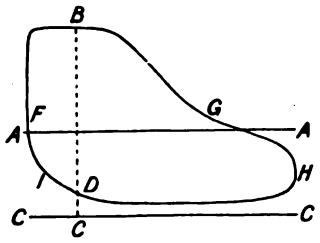

FIG. 76.

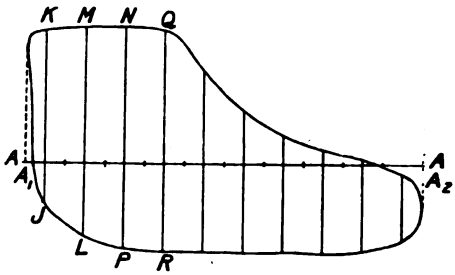

FIG. 77.

value of all such absolute back pressures as $D\ C$. We must subtract the second from the first, and call the answer the effective pressure P. In fact, the steam does work on the piston in the forward stroke; the piston does work on the steam in the back stroke, and hence we must subtract. Now very little thought will show that instead of taking the averages of the $B\ C$ forward pressures, and subtracting the averages of the $D\ C$ back pressures, we can at once take the average of the $B\ D$ or difference pressures. Hence, all that we have to do is to find the average breadth of the diagram $FBGHDI$ (breadth being considered to be at right angles to the atmospheric line); and the scale tells us the effective pressure p_e.

To get the average we often use **a planimeter** as described in Art. 131. But a **very common plan** is the following:—We draw the two bounding lines of the diagram, lines at right angles to $A\ A$, to cut the atmospheric line in A_1, A_2, then A_1A_2 is the length of the diagram.

I notice that in my figures of diagrams I sometimes show the atmospheric line prolonged as from $\hat{A}$ to A, Fig. 81. Now in truth the indicator will show it ending at A_1 and A_2. The ends A_1 and A_2 being faint, perhaps it is always wise to draw the bounding lines of the diagram as I have described.

A_1A_2 is divided into ten equal parts, and in the middle of each part a breadth is drawn. The lengths of the ten breadths KJ, ML, NP, QR, &c., are measured, (usually they are measured at once by the boxwood scale supplied, in pounds per square inch; but they may be measured in inches, and only the average reduced to pounds per square inch,) and written at the side, added up and divided by ten to get the average value. Notice that if the diagram has a loop the breadths of this part are negative. When the average pressure P is known, it must be multiplied by the area A to get the total effective force on the piston; this multiplied by the length of the stroke (twice the length of the crank) in feet, gives the work done in every stroke; multiplied by the number N of strokes per minute (or really revolutions of the crank), and divided by 33,000 we have the horse-power indicated on the left-hand side of the piston. The rule is easily remembered in the form

$$\text{PLAN} \div 33{,}000$$

If we know the average effective pressure on the other side of the piston, we may calculate the horse-power developed there also, or we may take P to be the average of the two, and take N to be the total number of effective strokes per minute, there being two in every revolution. In many modern, high-speed, single-acting engines the steam acts only on one side of the piston.

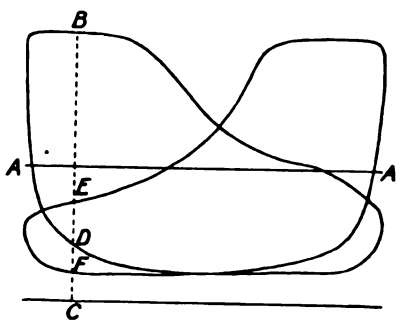

FIG. 78.

The two diagrams are often on the same card as in Fig. 78.

50. A student ought not to pass too easily over this subject; it is very simple, but let him be sure that he really does understand it, and is not merely taking a thing for granted because everybody says that it is so. Now we may look at the thing from another point of view. Find **the actual forces from left to right**, acting on the piston of Fig. 5, in its forward or ingoing stroke, that is when going from left to

right. At a certain instant the pressure is $B\,C$ on one side and $C\,F$ on the other side, so that $B\,F$ represents the real pressure which, if multiplied by the area of the piston, gives the total force from left to right. Similarly in the back stroke when the piston gets to that place, the force *from right to left* is represented by $E\,C - D\,C$ or $E\,D$ per square inch. An enquiring student ought to make a diagram which shows these values for every position and it ought to be in pounds per square inch, to the same scale as the indicator diagrams. From the diagrams of Fig. 78 I have found the result shown in Fig. 79. This diagram shows to scale what is the force from left to right acting on the piston at every part of its stroke. The length of the stroke being $O\,O$: at the place C in the forward stroke, $H\,C$ is the force from left to right, and in the back stroke the force is really from right to left, and is of the amount shown in $C\,J$. A student who wants to make a thorough study of the elementary facts concerning steam engines will not fail to make a diagram of this kind. Note that the average total breadth of this diagram at right angles to $O\,O$ is the sum of what we called the effective pressures on the two sides, and its area is the sum of the areas of the two diagrams of Fig. 78.

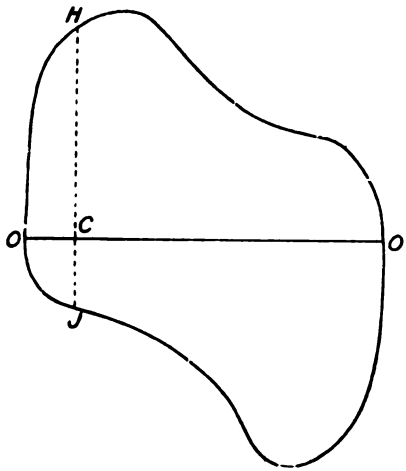

FIG. 79.

CHAPTER V.

THE INDICATOR, CONTINUED.

A SET OF EXERCISES.

51. I do not see how any student can work carefully through a set of exercises like the following without acquiring a fairly good knowledge of the theory of the steam engine. He will ever afterwards be glad to have done such work.

Fig. 80 shows the diagrams from the two ends of a cylinder of 18 inches diameter, crank 15 inches long, 120 revolutions per minute; a steady load was maintained for four hours. Boiler pressure 38 lbs. per square inch by gauge, 52·7 lbs. per square inch absolute. The area of piston is $18^2 \times \cdot7854$, or 254 square inches. The working volume of the cylinder is $254 \times 30 = 7620$ cubic inches, or 4·41 cubic feet.

The clearance space for left-hand diagram (for the side of the piston remote from the crank) was just filled by 13·2 pints of water, or 457 cubic inches; this is 6 per cent. of the working stroke. The clearance space for right-hand diagram was found to be 533 cubic inches, or 7 per cent. of the working stroke.

I show a scale of pressure because I do not know to what scale the engraver will bring the diagram. The scale for volume is of no consequence.

1. What is the **average pressure** from each diagram? Work by taking ten equidistant ordinates and test your answers by planimeter.

Answer. 31·2 and 30·3 lbs. per square inch.

2. What is the **indicated horse-power** of the engine?

Neglecting the cross sectional area of the piston rod. The cross sectional area of the cylinder is $9^2 \times \pi$ or $18^2 \times \cdot7854$, or 254 square inches. The average of the two average pressures $\frac{1}{2}(31\cdot2 +$

30·3), or 30·75 lbs. per square inch, and hence the average total pressure on the piston in the direction of its motion is 254 × 30·75 = 7800 lbs. As the stroke is 2 × 15 ÷ 12, or 2·5 feet long, the work in one stroke is 7800 × 2½, or 19,500 foot-pounds. As there are 2 × 120

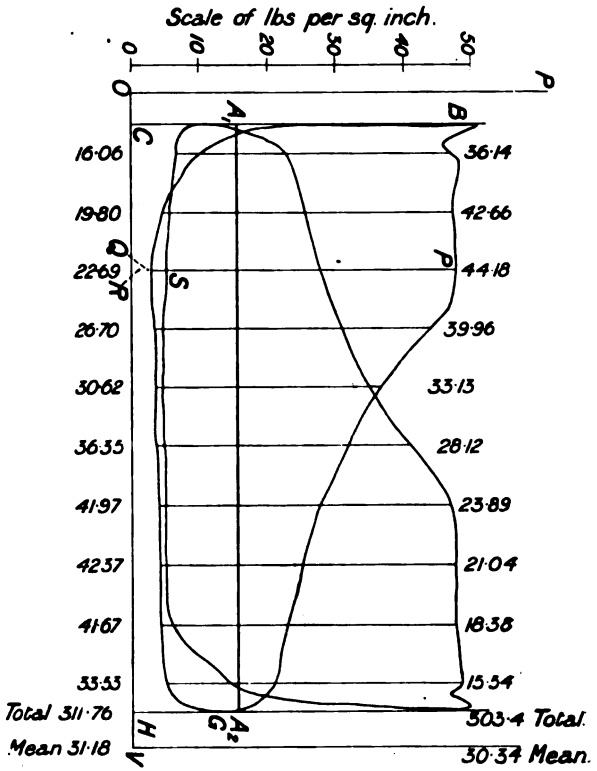

FIG. 80.

strokes per minute, the answer is 19,500 × 240 ÷ 33,000, or 142 horse-power.

3. The load on the engine having been kept nearly constant for four hours, the following measurements were also made, beginning and ending with approximately the same kind of fire and the same amount of water and same pressure, &c., in the boiler, it was found that 2176 lbs. of coal had been used during the four hours, or 544 lbs. of coal per hour. Hence the **consumption** is 3·8 lbs. **of coal** per hour per indicated horse-power.

A water meter was employed to measure the quantity of feed water supplied to the boiler, it was found to be 242 cubic feet in the

four hours. Although the feed water was tested and found to be at 118° F. we may take it that its weight is nearly the same as if cold or 62·3 lbs. per cubic foot, hence $242 \times 62{\cdot}3 \div 4$, or 3770 lbs. of steam was supplied to the engine per hour (except for leakage), and hence we get one indicated horse-power for $3770 \div 142$, or **26·6 lbs. of steam** per hour. It is to be noticed that of steam of 52·7 lbs. pressure the consumption by a perfect condensing engine using the Rankine Cycle (see Art. 214) is 10·2 lbs. per horse-power hour, so that our **efficiency Ratio** is $10{\cdot}2 \div 26{\cdot}6$ or 0·38. Also from the next exercise we see that in our engine there is an expenditure of 288 units (F.) of heat per minute per horse-power.

4. How much **water** is evaporated **per pound of coal**, assuming that the steam contains no water as it leaves the boiler?

Answer. 6·93 lbs.

Note that 1 lb. of feed water at 118° F. converted into steam at 52·7 lbs. per square inch (or 284° F. as may be seen by the table Art. 180) needs $1114 - 118 + {\cdot}305 \times 284$, or 1083 units of heat.[1] Our usual standard of evaporation is the conversion of 1 lb. of water at 212° F. into steam at 212° F., or 966 heat units, and hence as for every pound of coal we have 6·93 lbs. of steam, we have $6{\cdot}93 \times 1083 \div 966$, or 7·77 standard evaporation pounds of steam.

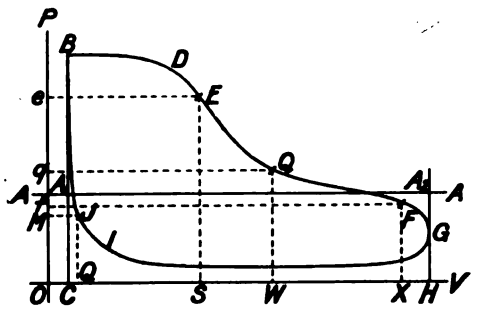

FIG. 81.

5. Draw the zero line of pressure OH Fig. 81. Draw the perpendiculars BA_1C and A_2GH touching the ends of the diagrams. Make OC the same fraction of CH that the clearance space, 457 cubic inches, is of the working volume, 7620 cubic inches. Now draw OP

[1] 1 lb. of water at 32° F. raised in temperature to θ° F. and then converted into steam, receives $\theta - 32$ units of heat as water, and the latent heat $1114 - 0{\cdot}695\,\theta$, or altogether

$$H = 1082 + 0{\cdot}305\,\theta°.$$

1 lb. of feed water at θ_1° F. converted into steam at θ_2° F. receives the heat $1114 - \theta_1 + {\cdot}305\,\theta_2$.

These are Fahrenheit heat units suiting Regnault's results. Multiply by 774 to convert into foot-pounds. (See Art. 177.)

so that we can measure our pressure and volume to scale vertically from OH and horizontally from OP. Note that OH represents the volume (7620 + 457) ÷ 1728, or 4·673 cubic feet.

6. I have marked the points E, Q, F, and J, Fig. 82; what are the **true volumes and pressures** at these points? My answers are the numbers in the first two columns of this table.

	Volume in cubic feet.	Pressure in lb. per square inch.	Weight of steam present in lb.	Percentage of water stuff which is really steam.
At E . . .	1·715	44·77	0·185	77·8
At Q . . .	2·865	29·62	0·209	87·8
At F . . .	4·323	21·69	0·235	98·8
At J . . .	0·5905	13·05	0·020	

7. Look up the volume of 1 lb. of steam at each of the above pressures and state the **actual weights of steam** present. Thus at E, steam of 44·77 lbs. per square inch measures 9·28 cubic feet to the pound; we have 1·715 cubic feet, therefore we have 0·185 lbs. of steam present at E. Make out the rest of the above table in the same way.

8. At J we see that 0·02 lb. of steam is in the cylinder before admission of fresh steam; at E we have 0·185 lb. present, how much is *indicated* as having entered?

Answer. 0·165 lb.

9. Find at E'' and J'' of the right-hand diagram, Fig. 82, what weight of steam is indicated as having entered on that side of the piston.

Answer. The volume at E'' is 1·97 cubic feet at 45·38 lbs. per square inch and its weight is 0·2153 lbs., at J'' ·019 lb. of steam is in cylinder before admission.

	Volume	Pressure	Weights
At E'' . . .	1·97	45·38	·2153
At J'' . . .	·5423	13·45	·0190

10. We see then that 0·165 + ·196, or 0·361 lbs. of steam are indicated per revolution of the engine; is not this 0·361 × 120 × 60, or 2599 lbs. per hour of **indicated steam?**

But we saw that 3770 lbs. of steam per hour really left the boiler, and hence 1171 lbs. per hour, or 31·1 per cent. of all the steam leaving the boiler, is **missing** or not indicated just after cut-off.

11. 500 lbs. of water per hour is measured as coming from the steam jacket, and it is estimated (no matter how it is estimated just now) that 130 lbs. of steam leaks away per hour from joints in pipes, &c.; this leaves 3140 lbs. of water as entering the cylinder every hour, and so we have $(3140-2599) \div 3140$, or 17·2 per cent. of the steam is **condensed** either in the cylinder or on its way to the cylinder.

Why should the cylinder itself condense so much steam as we find that it condenses? This is now the **most important practical question** for the engineer.

12. We have assumed that 3140 lbs. of water stuff enter the cylinder per hour, or $3140 \div (60 \times 120)$, or ·436 lb. in one revolu-

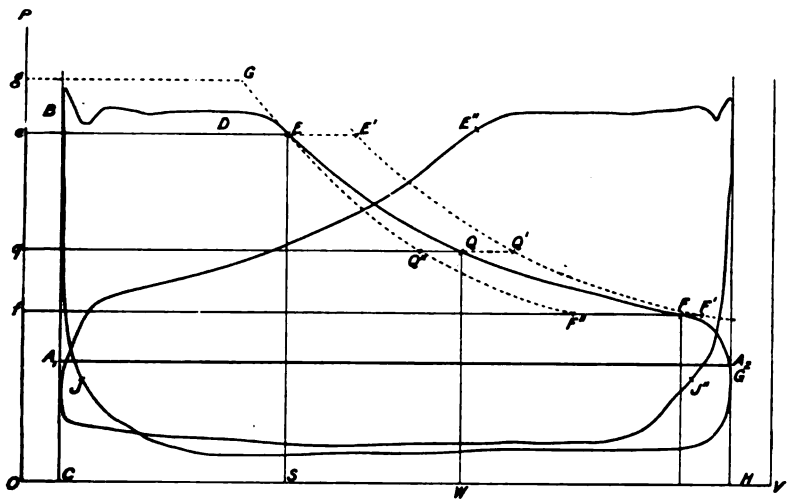

Fig. 82.

tion. Assume that this is equally divided between the two sides of the piston as the average pressures are nearly equal, so that ·218 lb. of water stuff corresponds to the left-hand diagram shown again in Fig. 82. The steam in the clearance space before fresh admission was 0·02 lb. Assume that there was no water present in the clearance space. Then at E, or Q, or F the total amount of water stuff present is 0·238 lb. *Question.* If it were all steam what would be its volumes at the three pressures 44·77, 29·62, and 21·69?

Answer. 2,268, 3·268, and 4·386 cubic feet.

Let the points E', Q', and F' represent these to the volume scale

of the figure. We can now complete the table of Exercise 6. We see that $E'R$ would be the volume of the water stuff corresponding to the point E if it were all steam, but only the volume ER is steam, and hence ER is to $E'R$ as the amount of actual steam is to the whole water stuff present. Similarly $Q\,T$ is to $Q'T$ as the actual steam is to the whole water stuff at Q. Similarly $F\,W$ is to $F'W$ as the actual steam to the whole water stuff present at F.

I have an easy rule for drawing such a curve as $E'\,Q'\,F'$ (see Art. 185) when any point, say E' in it is given. I will not give it here, but surely a thoughtful student can have no great difficulty in inventing such a rule when he sees that one is needed. Hint; at any point Q', the distance $Q'q$ represents the volume, and $Q\,W$ represents the pressure of the same weight of steam as is shown in the same way at E'. Hence (see (9) Art. 180)

$$ES \times E'e^{1\cdot0646} = QW \times Q'q^{1\cdot0646}.$$

is the law showing the relations of these quantities to one another.

Does condensation or evaporisation occur from E to F? *Answer*, Evaporation.

13. Students may be interested to know that during the above four hours' test the average power leaving the crank shaft was measured as a torque of 5033 pound feet at an angular velocity of 120 revolutions per minute, or 754 radians per minute; that is the useful power given out by the crank shaft was 5033 × 754, or 3,795,000 foot pounds per minute, or 3,795,000 ÷ 33,000, or 115 horse-power.

The power given by the steam to the piston was 142. The useful power is 115, and hence the **efficiency of the mechanism** of the engine is 0·81, or 81 per cent.

14. During the above four hours the average power leaving the dynamo machine which was driven by the steam engine was measured as a current of 730 ampères at an electrical pressure or voltage of 100 volts. This is 730 × 100, or 73,000 *watts* (called by the electrical people 73 *units* sometimes), and as we know that 746 *watts* are equivalent to 1 horse-power, the power electrically given out was 73,000 ÷ 746, or 98 horse-power. The **efficiency of the shafting and dynamo** is 98 ÷ 115, or ·852, or 85½ per cent.

15. During the test the electric power was sent through wires to incandescent lamps; 4½ per cent. of the power leaving the dynamo was converted into heat in the wires, that is, the drop in voltage

was from 100 to 95·5, so that 93·6 horse-power was given out as heat and light. When electric motors instead of lamps received the electric power in some similar tests, they gave out 85 mechanical horse-power to drive machinery.

16. A pound of the coal when carefully burnt was found to give out 15,300 (Fahr.) units of heat; each heat unit is equivalent to 774 foot-pounds, and hence each pound of coal means a supply of energy of $15{,}300 \times 774$, or say 12×10^6 foot pounds. For each pound of coal there was a supply of 6·93 pounds of water, and each pound of water had received 1083 heat units, so that the steam per pound of coal has 7505 heat units, or 5,809,000 foot-pounds. One indicated horse-power for one hour is $33{,}000 \times 60$, or 1,980,000 foot pounds. This work is done by 3·8 pounds of coal, and hence the indicated work for 1 pound of coal is $1{,}980{,}000 \div 3{\cdot}8$, or 521,000 foot pounds.

The useful work transmitted from the crank shaft per pound of coal is 81 per cent. of this, or 422,000 foot-pounds. The electrical energy leaving the dynamo machine per pound of coal is $85\frac{1}{3}$ per cent. of this, or $422{,}000 \times {\cdot}852$, or 359,500 foot-pounds. The heat and light energy given out by the lamps is $95\frac{1}{2}$ per cent. of this, or 343,000 foot pounds.

We may therefore make some such statement as the following:—The total energy obtainable from a pound of coal is disposed of in the following way:—

5,809,000 foot-pounds to steam, 6,191,000 foot-pounds wasted in chimney and by radiation.

521,000 foot-pounds to piston, 5,288,000 foot-pounds to condenser and by conduction and radiation.

422,000 foot-pounds from crank shaft, 99,000 foot-pounds wasted in friction of engine.

359,500 foot-pounds to electric light leads, 62,500 foot-pounds wasted in shafting and dynamo.

343,000 foot-pounds given out as light and heat by lamps, 16,500 foot-pounds wasted in leads.

52. In the above table we note the great waste in converting the steam energy into indicated work. Part of this loss occurs in the steam jacket; **most of the waste** will be accounted for if we measure the heat given to the condensing water. Measuring the number of pounds of condensing water used per hour, and its rise of temperature, it is easy to calculate the heat received by it from the exhaust steam. See Art. 138.

Students may be interested in some of the results of four other

four-hour tests made on the same engine, without altering its cut-off or speed, but with different steady loads.

Indicated horse-power. *I.*	Power transmitted from crank shaft. *B.*	Electrical horse-power. *E.*	Water in lb. per hour. *W.*	Coal in lb. per hour. *C.*
190	163	143	4805	730
142	115	96	3770	544
108	86	69	3080	387
65	43	29	2155	218
19	0	—	1220	—

Although this was a single cylinder engine, and therefore not very economical, the results are well worthy of study, because there are relationships among the numbers which are the same as those we find in any engine which is governed, as this one was, **by throttling the steam**, or in some other way lowering the initial pressure of the steam.

Thus for example let the student plot the values of W and P, or W and E, or B and I on squared paper. Let him also find the coal or water per hour per indicated or transmitted or electrical horse-power, and let him meditate on his answers. He is gathering material for a very thorough practical comprehension of the steam engine.

And now I should like to think that the average student has a chance of making all the measurements which I have described. Even if only a small steam engine is available, an earnest teacher will find that he can let students make tests of great value to his students.

53. At Finsbury it was **a regular part of the Session's work** for two students to attend to the machinery every Wednesday, from the lighting of the fire at 7 A.M. to 9.30 P.M. Whatever part of the stoker's or engineer's work they could be entrusted with, they did. They regularly took all the measurements necessary for calculating indicated horse-power, actual horse-power given out by engine, feed water, coals, &c. They made elaborate reports of all that was done during the day. Few people seem to know how much roughly correct information may be obtained easily from the study of an ordinary working engine, for I want it to be understood that this was no specially arranged laboratory steam engine.

An **exercise of considerable interest** may here be mentioned. A batch of twenty students (who had already had the above kind of experience) would have a day's measurements. They knew exactly what each of their duties was beforehand. Their watches agreed.

When any observation was made, the time was noted, and each student stayed twenty minutes at each kind of observation, and then went on to another. When he went to another job he found two or more men there to instruct him if he needed instruction. He reduced all his own observations. At any instant there would be—Two men checking the speed indicator by counting, and also taking temperature of hot well; two men measuring feed water; three men taking indicator diagrams; two men observing pressure gauges, one on boiler, one on exhaust in engine room, one on vaporising condenser on roof of building; two men weighing coals, &c.; two men observing actual power given out by engine, and transmitted through dynamometer coupling; two men measuring electrical horse-power given out by dynamo machine, which was the only thing driven by the engine through a long shaft. The engine was run for four hours at a time under a steady load.

All the observations were entered in a great table as soon as they had been reduced. Students who took diagrams had to make separate reports on the nature of the expansion curve, the missing water, the state of the valve motion, and many other things. Such a field day as this was, I found, worth many lectures in bringing home to students what actually occurs in machinery. It is to be remembered that these students had previously obtained the calorific power of the fuel; some years they took samples of the furnace gases, and analysed them in the chemical laboratory; every year they tested the instruments used for measuring feed water, the transmission dynamometer &c., before the field day.

Imagine a student to go through this easy work and arrive at the above results; take into account the impossibility of his doing the work without understanding it. Surely any one can see how very different must be the notions of a student after this kind of experimenting from those of a man who merely reads a book or listens to lectures. I affirm that **simple experimental work** of this kind is absolutely necessary for the elementary student if he is to get sound notions not merely concerning steam engines, but about energy questions in general.

54. *More Exercises.*

17. Try if there is a **law of expansion** of the simple form pv^k = constant. At a point like Q (Fig. 82), $Q\,W$ represents the pressure, and $Q\,q$ the actual volume of the expanding steam to some scales. If there is such a law as the above, it is easy for the student to prove that the actual scales of measurement are of no importance. I there-

fore measure the distance $Q\ W$ in inches, and call it p, and I measure Qq in inches and call it v. Measurements like the following ought to be made at many points from E to F. My measurements are made, not upon the diagram as engraved, but upon my own copy of this diagram. When the table has been made out let the student take the common logarithms of all the measurements.

p	v	log. p.	log. v.
4·46	3·34	·6493	·5237
4·11	3·73	·6138	·5717
3·78	4·12	·5775	·6149
3·44	4·6	·5366	·6628
3·19	5·08	·5038	·7059
2·96	5·58	·4713	·7466
2·67	6·3	·4265	·7993

He will now plot ·6493 and ·5237 as the co-ordinates of a point on squared paper, and get a point for each pair of numbers. It is evident that if there is such a law as

$$pv^k = const., \text{ or } log.\ p + k\ log.\ v = C$$

then the plotted points must lie in a straight line, and so the test is quite easy. In the present case I find that a straight line seems to lie evenly among the points. We may reasonably say therefore that the law is true. Assuming it to be true I see from my own squared paper that if *log.* p were 0·65, *log.* v would be ·525,

$$\text{so that } ·65 + ·525\ k = C \quad . \quad . \quad . \quad . \quad (1)$$

again if *log.* p were 0·4, *log.* v would be 0·833,

$$\text{or } ·40 + ·833\ k = C \quad . \quad . \quad . \quad . \quad . \quad . \quad (2)$$

Subtracting (1) from (2) we find $- 0·25 + ·308\ k = 0$, or $k = 0·81$, and so the law of expansion is very satisfactorily shown to be

$$p\ v^{0·81} = \text{constant}$$

55. In the next Exercise we are going to study what goes on in the water and steam in the cylinder during the expansion from E to F (Fig. 82). It is assumed that at every point such as Q, we know that there is the volume $Q\,q$ of steam, and $Q\,Q'$ represents the extra volume that there would be of steam if the water were all steam. We shall consider what would take place if the whole amount were 1 lb. (we know that we have only ·209 lb. ÷ ·878, or 0·238 lb. present, or 0·209 lb. of steam and 0·029 lb. of water). We assume that all

the steam and water is **at the same temperature,** and a student must decide for himself what value he may place upon results based on this assumption, which is certainly wrong, but which seems to be the only one on which we can base calculations.

Assuming (as is usual, but in my opinion, wrong) that there is **no water present at the beginning of the admission,** we see that, during admission there is 0·222 lbs. of steam condensed; we may take it that the latent heat of this condensed steam is given up to the cylinder during the admission, but at what rate this is done at every instant of the admission we do not know, although we may speculate about it. Again, during the release the stuff is partly in the cylinder and partly in the condenser; in the condenser, heat is being rapidly given out by the condensing steam; in the cylinder whatever water remains is probably boiling away, receiving heat from the metal of the cylinder. It seems when we consider the evaporation going on from E to F (Fig. 82), that there is no great likelihood of much water being present during the exhaust.

Use of MacFarlane Gray's Diagram.

EXERCISE 18. Let Fig. 83 be a $t\phi$ diagram (see Art. 203).

Points on the curve $A\,B$ are plotted to the figures headed ϕ_w in the table, Art. 180. Points on the curve $C\,D$ are plotted to the figures headed ϕ_s in the same table.

The curve $E\,Q\,F$ on the $t\phi$ diagram, Fig. 83, corresponds with the curve $E\,Q\,F$ on the indicator diagram, Fig. 82. It is drawn in the following way. To find the point Q. Find the temperature corresponding to the pressure at Q and draw $q\,Q'$ to correspond; divide $q\,Q'$ in Q, Fig. 83, in the same proportion as that in which Q divides the distance $q\,Q'$, Fig. 82. Find the other points in the curve $E\,Q\,F$ in the same way.

The $t\phi$ diagram tells us

1. If the expansion from E had been adiabatic $q\,Q'' : Q''Q'$ in the $t\phi$ diagram would have been the ratio of the amounts of steam and water present at Q. Hence, in the indicator diagram make $q\,Q'' : q\,Q'$, as $q\,Q'' : q\,Q'$ in the $t\phi$ diagram, and so get the curve $E\,Q'F''$, Fig. 82. This is what the real adiabatic expansion indicator diagram curve from E would be when we deal with the proportion of steam and water which we know to be present at E.

2. The line $O\phi$, Fig. 83, is really supposed to be drawn at $-$ 428° F., or $-$ 274° C., so the student must imagine the dotted lines in the diagram to be very much longer than they are shown. Indeed, on the temperature scale the point O marked $-$ 428° F.

ought really to be looked upon as a zero of temperature, and instead of 200° F. we ought to read the absolute temperature 661. On the complete diagram, areas measured right down to the line $O\phi$ represent heat received.

Thus each pound of water stuff from E to Q **receives heat from the metal** of the cylinder of an amount represented by the area $ELMQE$, and the total amount of heat received during expansion from E to F is the area $ELNFQE$. The scale to which heat is represented is always easy to find because the rectangular area $emnE'c$

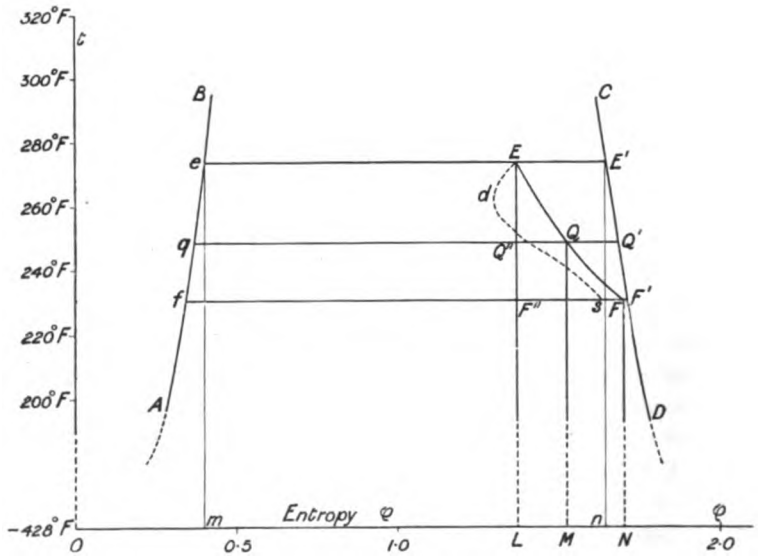

FIG. 83.

represents to scale the latent heat of a pound of steam, which has the pressure shown by E on the indicator diagram.

Suppose it happened that the curve EQF when constructed turned out to be like the dotted curve Eds, note what it means. At the beginning of the expansion from E to d heat is being *given* to the metal of the cylinder by the water stuff. From d to s heat is being *received* by the water stuff from the metal of the cylinder. Such curves carefully studied show us how heat is exchanged between metal of cylinder and the water stuff. Students must work many exercises in this way in spite of the fact that we cannot prove that there is no water present before admission.

56. My students sometimes draw the complete $t\phi$ diagram cor-

responding to our indicator diagram. The assumption throughout is that a pound of *water-steam* is present in a vessel of changing volume, and the amount of it in the state of water is exactly known at each point. The volume of the water is neglected. If the indicator diagram were really correct, and if we could be sure that the temperature is always the same in any part of the water and steam, such a diagram might be very interesting. I am sorry to think that

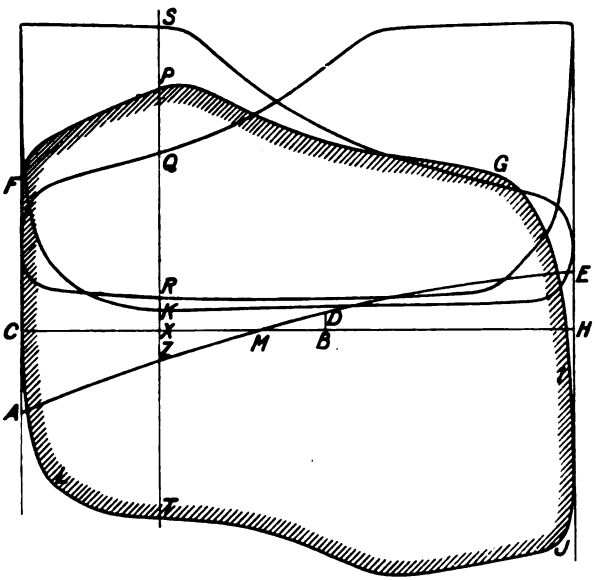

FIG. 84.—DIAGRAM OF FORCE AT CROSS HEAD.

some philosophers are apt to forget that this consideration renders most of their speculations useless. But the much more important assumption that we do actually know how much water is present at any point is really untenable.

57. EXERCISE 19. In many of the above exercises upon our indicator diagrams we have gone on the assumption that all the stuff inside the cylinder is at the same temperature. This is, of course, untrue, like many other assumptions which we make in our desire to calculate something; but reasoning on even wrong assumptions may give rise to useful suggestions. It is a more absurd assumption still that the material of the cylinder is non-conducting, and yet if we imagine some water in a non-conducting cylinder to represent the metal of a real cylinder which is heated and cooled, although the assumption is wrong, it leads to suggestions that may be of use.

Using the numbers given us by the above diagram, and assuming that we have no knowledge of the actual amount of water present, I have worked out (Art. 216) what must have been the amount of water present before admission,

and also the amount condensed during admission. In fact, the shape of a small portion of the expansion curve tells us the value of these things if the cylinder is non-conducting.

58. EXERCISE 20. Following the method of Art. 50, make a diagram showing for every point of the stroke the **force** (divided by the piston area for convenience) **acting on the cross head** end of the connecting rod, if the weight of piston, piston rod and crosshead is 450 lbs., and if the connecting rod is 6¼ feet long.

First let us find the forces which the cross head must exert to maintain the motion of these parts, if there was no steam pressure on either side of the piston and if the crank shaft were driven by an outside agent.

The crank pin velocity is $v = 2\pi \times 1\frac{1}{4} \times 2 = 15{\cdot}71$ ft. per second. The accelerations at the ends of the stroke are, numerically—

$$v^2\left(\frac{1}{r} \pm \frac{1}{l}\right) \text{ or } 15{\cdot}71^2\left(\frac{1}{1{\cdot}25} \pm \frac{1}{6{\cdot}25}\right) = 236{\cdot}8 \text{ and } 157{\cdot}9.$$

The moving mass is $\frac{450}{32{\cdot}2}$ in engineers' units, or 14. Hence the forces at the ends of the stroke are 3315 and 2211 lbs. Reducing these to the scale of pounds per square inch on piston we have 13 and 8·7.

We see by Art. 339 that when the crank is at 90° with the line of centres, the piston is 0·125 feet to the *right* of its mid stroke, and its acceleration is 39·5, giving to the scale of pressure a force of $\frac{39{\cdot}5 \times 14}{254}$ or 2·18 lbs. per square inch.

The engine is horizontal, so that the mere weights of the parts (neglecting the connecting rod) do not enter into the calculation. I have made CA represent 13 lbs. per square inch, HE 8·7, and I found the point B 0·125 feet to the right of the mid stroke, and made BD represent 2·18 lbs. per square inch. I drew the curve ADE through the three points, and take its vertical distance anywhere from CH to represent the force which at the crosshead would give to the moving mass the acceleration which it possesses. To the same scale it is now evident that the total force *from left to right* (that is towards the crank shaft) on the crosshead is shown by distances of points on the diagram $CFPGIJTLC$ *above* CH. To find such a point as P I take the distance SR (from S on one diagram to the back pressure point R on the other diagram), subtract from it XZ, and let XP represent the answer. This is very easy to do with the edge of a strip of paper; it is easier to do than to describe. Again, make $ZT = QK$, and we find T.

In Art. 65 I have shown the nature of this diagram for a single acting engine.

59. EXERCISE 21. The weight of the connecting rod of our engine is 276 lbs., its centre of gravity is 40 inches from the crosshead and 35 inches from the crank pin; imagine that its mass is distributed in the following way—$\frac{3}{8}\frac{5}{8}$th of it, or 128·8 lbs., at the crosshead; $\frac{5}{8}$ths of it, or 147·2 lbs., at the crank pin. It can be proved (see Chap. XXIX) that if we replace the real connecting rod by two masses like these at its ends, some exceedingly tedious and difficult problems on balancing, &c., may be solved quite quickly, and the error is small. Note that the centrifugal force of the part on the crank pin never alters in direction, and is radial, and when we are calculating turning moment on the crank it may be neglected. In the present case use this method to find the turning moment on the crank shaft.

Answer. The old diagram (Fig. 84) $ADEHC$ of forces, due to acceleration, must have its ordinates increased in the proportion of $\frac{450 + 128{\cdot}8}{450}$. This

combined with the old steam force diagram gives a diagram not very unlike *CFPGIJTLC*. At any instant let the force (the diagram ordinate multiplied by the area of the piston) be called F pounds, in the position shown in Fig. 86, AO being the line of centres, and OH a line at right angles to AO. It is easy to show that the turning moment on the crank shaft due to F is $F \times OH$ if we neglect the weight of the rod and friction. It is therefore necessary for the student to draw such a figure for many points in the piston stroke, and to multiply each value of F in pounds by each distance, such as OH in actual feet. It is well to make a diagram in which the abscissæ represent angles passed through by the crank.

If the crank shaft gives out power uniformly during the revolution, the height of this diagram above its average height represents the acceleration of its velocity to scale. It is useless to pursue the matter further, when the connection of the shaft with driven machinery is by belting or elastic mechanism.

60. Exercise 22. The engine is on the same shaft as the armature of a dynamo machine; the whole mass moved is like a fly-wheel, weighing 3 tons, with an average radius of 5 feet. What is its **fluctuation of speed?**

Answer. The mass of the wheel is $3 \times 2240 \div 32{\cdot}2 = 209$. Its moment of inertia is this multiplied by 5^2, or it is $I = 5225$ in engineers' units. Each of the excess moments in the diagram, divided by I, gives the acceleration. I know that the speed is very nearly uniform, and it will save trouble and produce almost no error to assume that equal angles passed through by the crank represent equal times. Hence the area of the acceleration diagram from $\theta = 0$ represents the gain of velocity. The graphical method of proceeding is easily understood; the tabular method described in my *Applied Mechanics* ought also sometimes to be employed.

θ	Turning moment, M.	E, or excess of M above average M.	$\int E \cdot \delta\theta$.	Gain in turns per minute, since $\theta = 0$.
0	0	−6212	0	0
5	630	−5585	−29500	−·0344
10	1400	−4815	−55500	−·140
15	2380	−3934	−83700	−·215
20	3300	−2911	−101000	−·258
25	4740	−1475	−112000	−·292
30	5350	−862	−118000	−·302
35	6360	+145	−119000	−·310
40	7350	1141	−116000	−·302
45	8210	1998	−108000	−·275
50	9060	2846	−96200	−·249
55	9900	3688	−79900	−·206
60	10580	4368	−59700	−·155

It will be seen that I have not divided all the values of E by I to get angular acceleration; again, instead of totting up $\int$ acceleration $\times\ \delta t$, the gain in radians per second, I have totted up $\int E \cdot d\theta$, taking $\delta\theta$ in degrees, as it saves unnecessary labour. This represents the gain of angular velocity to some scale; I want it in revolutions per minute. Now the gain in revolutions per minute is evidently $\frac{60}{2\pi}\int_0^t \frac{E}{I}\,dt$ if t is in seconds $= \frac{60}{2\pi}\int_0^\theta \frac{E\,dt}{I\,d\theta}\,d\theta$. As θ is in

degrees, $\frac{dt}{d\theta} = \frac{\text{time of a revolution in seconds}}{360}$, sufficiently nearly constant for our purposes; this is $\frac{0{\cdot}5}{360}$ or $\frac{1}{720}$. We have therefore to multiply the numbers in column (4) by $\frac{60}{2\pi I}\frac{dt}{d\theta}$, which is $2{\cdot}58 \times 10^{-6}$, to get the numbers in the fifth column.

EXERCISE 23. State the maximum and minimum and average turning moments on the crank shaft.

Of course as we have neglected friction, the actual turning moments are less than these. In fact, Exercise 13 tells us that they are 81 per cent. of these.

61. EXERCISE 24. For eight positions of the crank show to scale (1) the actual force on the crankpin, (2) that component of it which acts at right angles to the crank, (3) that component of it which acts radially.

(2) Is already drawn to scale, for it is the turning moment on the crank shaft in pound feet divided by 1·25 feet, the length of the crank. Let BS drawn at right angles to the crank OB, represent it, make the connecting rod (produced as shown) direction BR be the diagonal of the rectangle $BSRQ$, then BQ is the component towards O of the push of the connecting rod on the pin. But we have also the centrifugal force (only to be calculated once) of 147·2 lbs., this is $\frac{147{\cdot}2}{32{\cdot}2} r (4\pi)^2$, or 903 lbs., and QW represents it in amount and direction, hence BW represents (3), and completing the rectangle $BWTS$, BT represents (1).

62. I have now described some of the exercises which I usually ask a student to work for me. After such a course of study he may feel that he really has thought a little about the steam engine. I know a great deal about the average student; he has read books and looked at the figures in the books, and he has heard descriptions of how calculations are made; he has that sort of knowledge of his subject which is possessed by a newspaper writer.

How often must we say these things before teachers and students get to believe us. When I was very young I used to think that the views I imbibed from magazine articles were my own, although they changed with the moon. After a popular lecture I thought I knew a subject nearly as well as the lecturer. No man learns to think by mere reading or listening to lectures; he only learns priggishness, and his method of study is exactly like Mark Twain's telescopic method of climbing Mont Blanc. It is very weak in me to publish in this book such figures as Fig. 83. A student ought not to see any such figure unless he has drawn it himself, and then his knowledge would have the exquisite flavour given by discovery.

63. There are fifty other useful exercises which might be described. For advanced students I may suggest the following.

EXERCISE 25. The indicator diagram (Fig. 82) gives the pressure of the steam for every position of the piston. By means of the table (Art. 180) write out the

temperatures of the steam. Find the angle made by the crank with its dead point for each of these positions, and draw a curve showing temperature of the steam on the left-hand side of our piston for every position of the crank.

This curve is interesting in itself. But now let the student take the values of twenty-four or thirty-six or more equidistant ordinates, and by any of the well-known methods express the temperature as a function of the time in **Fourier series** (see Art. 316). They will give greater interest to the considerations of Art. 229.

EXERCISE 26. In a position AB (Fig. 85), if the connecting rod is at right angles to the crank, the push in it is great, and the centrifugal force upon

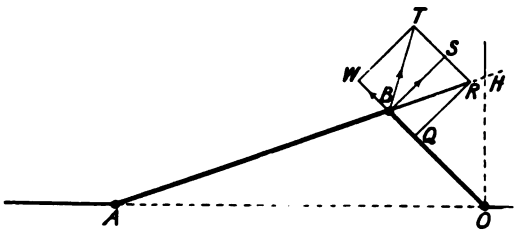

FIG. 85.

it is great, and presumably this is its position of greatest weakness; consider now **its strength.**

It will be noticed that in a horizontal engine the figure shows the best direction of motion, because the weight of the rod opposes centrifugal force when the rod is a strut. In an engine which must work at full power in either direction of rotation, the weight of the rod ought to be considered as well as the centrifugal force. In vertical engines the weight of the rod may be neglected. This exercise is one that ought to be worked out on the principle described in books on applied mechanics.

EXERCISE 27. At any instant **what are the stresses** in every part of the frame of the engine? If the engine runs at very high speed we must take elastic

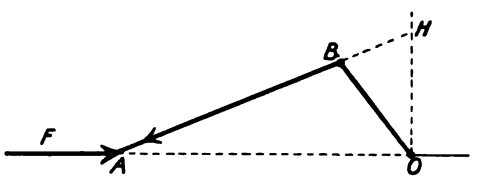

FIG. 86.

vibratory effects into account; but at speeds up to 400 revolutions per minute in such engines as are in the market, we may neglect such effects.

The indicator diagram enables the forces on the cylinder to be calculated, the above diagrams enable all the other loads on the frame to be calculated. It is usual to consider these at only one or two positions, when their effects are likely to have the greatest stress-producing effects. The calculation belongs to that part of applied mechanics which is called machine design, and no general rules may be given concerning it. The frames of modern engines differ from older engines greatly in the regard paid to considerations of this nature, but also greatly to ease of manufacture and fitting.

64. Exercise 28. At any instant find the forces with which the frame of the engine acts upon its supports. If we may neglect the fluctuations in flow of steam from boiler and to exhaust, the forces are easily calculated by neglecting all the steam pressures, because they balance one another, and the general principle is this—

If m is any small portion of the engine which is moving, and it has an acceleration in a direction which I shall call x of the amount $\ddot{x}$, then $m\ddot{x}$ is to be regarded as a force in the direction x. If the resultant of all such forces be found, this is the resultant of all the forces acting on the ground or other support. The general theory is given in Chap. XXIX. A triple expansion engine has often two low-pressure cylinders, and in this and in quadruple expansion engines there is always a good opportunity of effecting a partial balance by properly spacing the cranks and adding to the masses of the smaller pistons, small models being relied upon rather than calculation.

65. *Single-Acting Engine.* In Art. 58 we found the diagram showing the force acting towards the crank at the crosshead of our double-acting engine.

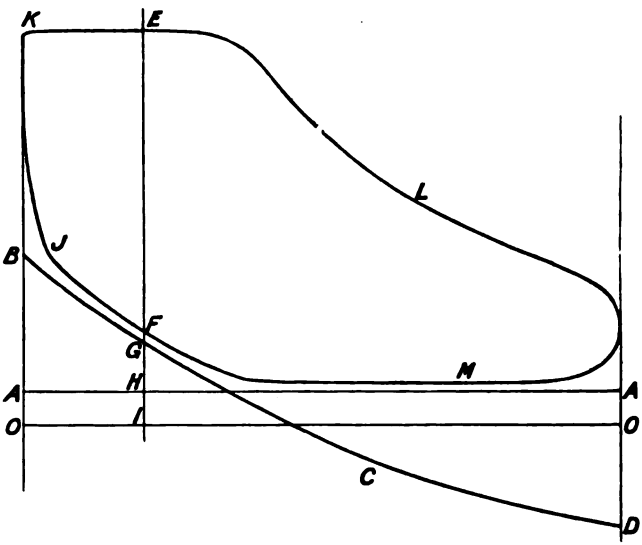

Fig. 87.

The most important reason for using single-acting engines is that this force may be always in one direction, so that "knocking" is not possible. This is illustrated in Fig. 87, where we have $J\,K\,E\,L\,M\,F\,J$, the diagram. In this case $A\,A$ is the atmospheric line, and the other side of the piston is exposed to atmospheric pressure always; hence the force due to the steam itself is $E\,H$ in the forward and $F\,H$ in the back stroke, always in the same direction. Let us suppose the cylinder vertically above the crank and the steam as acting on the upper side of the piston. Let all forces be reckoned per square inch of piston. Let $A\,O$ represent the weights of piston, piston rod and crosshead. In most ordinary engines $A\,O$ represents from 2 to 6 lbs. per square inch of piston. Let $O\,B\,C\,D\,O$ be the acceleration force diagram, which must be *subtracted* from the downward forces. We thus see that $E\,G$ and $F\,G$ are the downward forces at the cross head, and they do not change sign.

But if the speeds were greater, so that $B\,C\,D$ were to cut $J\,F\,M$, we should be compelled to give more cushioning. When the speeds are much greater we prolong the piston rod and let the cushioning effect of air behind an auxiliary piston supplement the ordinary cushioning effect of the steam. It is well worth while for a student to work out an example in which $O\,B$ is three times as great as what is shown, noting exactly how much air cushioning effect is necessary to prevent reversal of force.

If we desire also to prevent knocking at the crank pin, we take care that a proper proportion of the mass of the connecting rod is supposed to exist at the crosshead, thus increasing the ordinates of the $B\,C\,D$ diagram, calling the result a crank pin diagram. **All knocking may then be prevented** in a single-acting engine, but this is impossible in double-acting engines; which are never, therefore, run at a high speed; but in double-acting engines we can often utilise the inertia forces to alter the point in the crank pin path at which the knock occurs, so that it shall not produce such serious effects. It will be noticed that in all

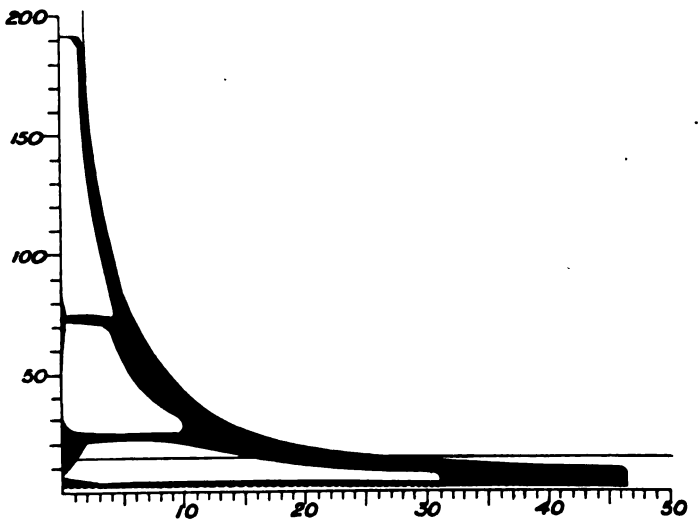

FIG. 88.

cases the inertia effects tend to equalise the turning moments on the crank shaft, but I am not disposed to think this a very important matter.

66. *Double and Triple Expansion Engines.*—It is a good exercise for a beginner to take a particular case, say that the cut off is at two-fifths of the stroke in each cylinder; to assume volumes for the spaces which receive the steam exhausting from one and admitted to the next; for each position of the crank, to note what the steam in each cylinder is doing, and to draw the hypothetical indicator diagrams on the assumption that $p\,v$ remains constant. I need not give examples of the answers as they are very easily arrived at.

Such exercises as these are easily worked out. In a compound engine, cutting off at half stroke in both cylinders; prove that by cutting off earlier in the stroke in the low pressure cylinder, more work is done in this cylinder and less in the high pressure cylinder; also it tends to remove the "drop" of pressure in the high pressure cylinder at release (absence of "drop" is not desirable).

The actual diagrams from each cylinder may be treated separately, as in Arts. 51–56, and this is the best way, because in the expansion part which is what is most to be studied, we really deal with different quantities of steam in the three cylinders, the steam in each clearance space being different in each. For some purposes, however, it is thought well to show them all on one diagram, to the same scale of pressure and volume. Now the total volume of water-steam being known for each, it is easy to make them equal to scale.

Figs. 88 and 89 are examples of diagrams which have been so reduced; they

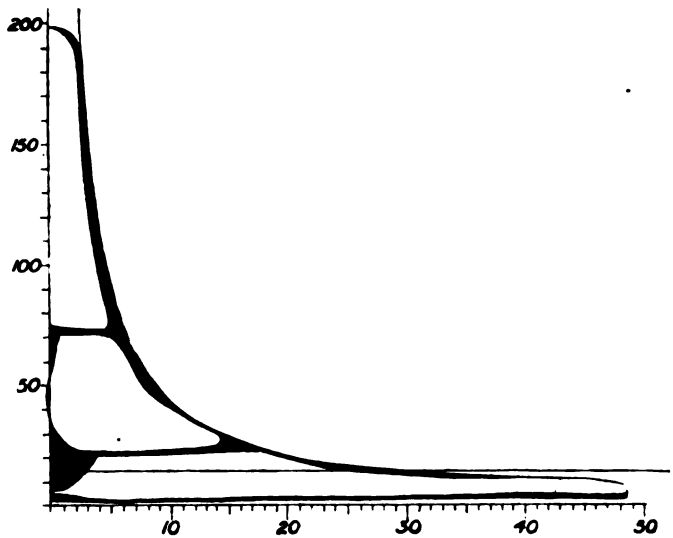

FIG. 89.

are copied from a paper by Prof. Osborne Reynolds. Fig. 88 when there was no steam in the jackets;[1] Fig. 89 when all the jackets had steam of 190 lbs. from the boiler. The shaded parts represent condensed steam.

As in Art. 51 the saturation curve is drawn on the assumption that there is no water present in the cylinder at the end of the exhaust. If we once allow that there may be water present, all our calculations are comparatively useless. I believe that there is almost always some water present, an unknown amount.

[1] Great care seems to be taken in existing triple cylinder engines to keep the jacket pressure of the I. and L.P. cylinders low; the steam entering by reducing valves and there being relief safety valves. It is interesting to see so much trouble taken to produce evil effects.

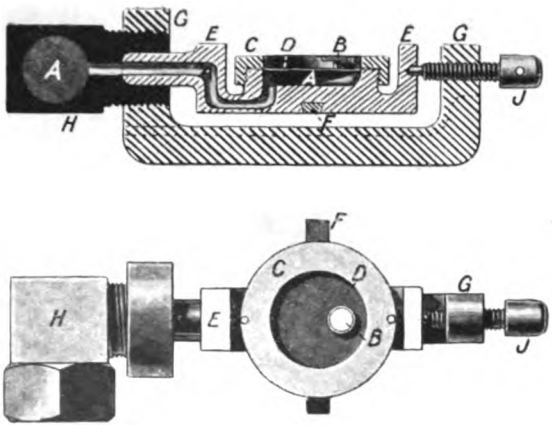

FIG. 90.

Perry's Indicator for very high speeds. When the cylinder communicates with the very shallow cast iron box A, the pressure tilts more or less the glass mirror B, fixed to the thin steel diaphragm D, so that a ray of reflected light forms a moving spot on a white screen, the displacement proportional to pressure. The box gets a small angular displacement proportional to the piston's motion, and this gives a motion of the spot at right angles to the first, and so the diagram is made either small on a photographic plate or a sheet of tracing paper backed by glass, or large on the ceiling or on a wall. It is a continuous line of light which is seen, and on tracing paper it is easy to draw. It is very pretty to watch the rapid change of shape of such a diagram, when by means of conveniently placed handles one varies brake load, speed, steam pressure, cut off, &c. I have shown this by diagrams on the ceiling to a large class of students. Mr. Willans told me that by means of it he had discovered a curious behaviour of water in the cylinder which had greatly troubled him. Such a diagram thrown continuously on the wall of an engine room might be useful.

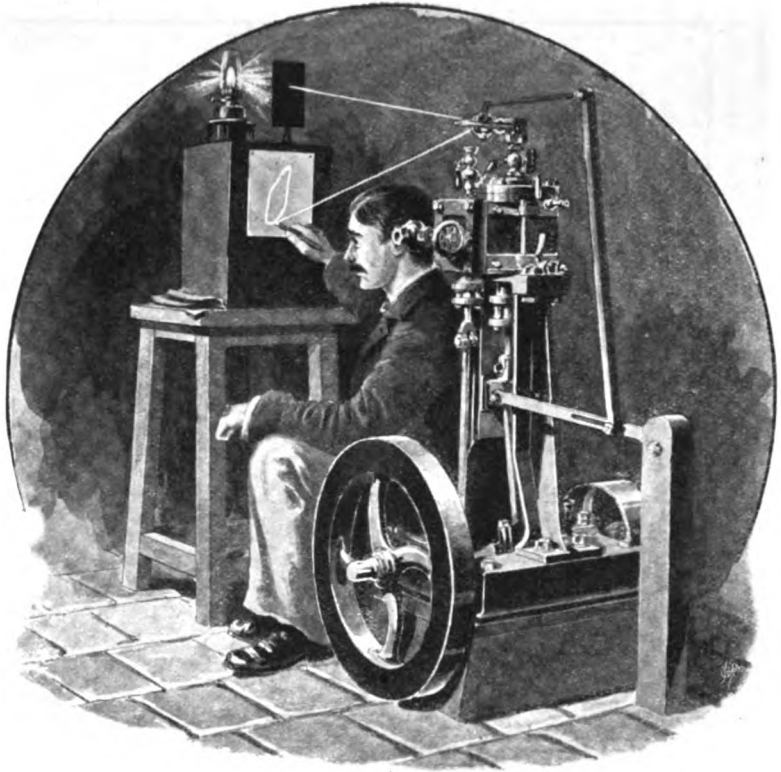

CHAPTER VI.

THE REGIPROCATING MOTION.

67. ALTHOUGH the student is already supposed to know the motion of a slider driving or driven by a crank by means of a connecting rod, we shall here study the mechanism a little.

In the study of all kinds of link work mechanism, I think that much is to be gained by making **simple models of laths** fastened by pins. I now suppose the student to have made such a model. Figs. 91 and 101 show the kind of model, a somewhat more elaborate model than perhaps the student may make for himself. The end A of the connecting rod $A\,B$ is guided

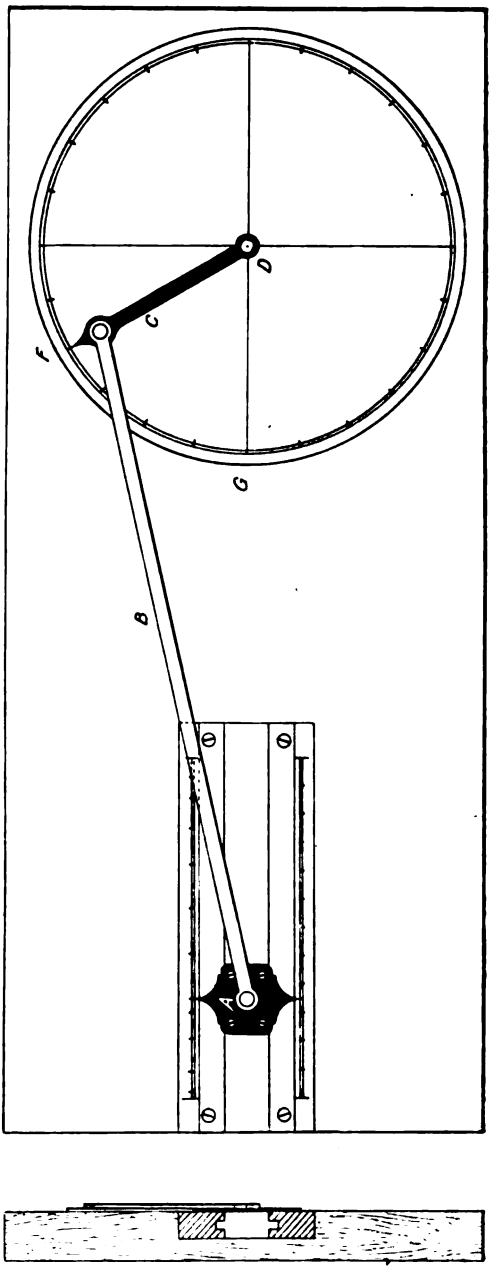

FIG. 91.

to move in the straight line direction DA; the motion of A represents the motion of any point in the crosshead or piston or piston rod. The other end B of the connecting rod moves in a circular path, whose radius is the length of the crank. The student will find that the straight scales for A, and the circular scale GF, enable the relative positions of A and DC to be studied. The following problems ought to be worked in other ways, and the answers tested by means of the model.

The next best method of study is by skeleton drawing.

PROBLEM.—When any position of the crank is given us, to find the position of the piston, or *vice versâ*. Notice that any point in the piston or piston rod or crosshead has exactly the same motion, the whole mass having a motion of mere translation. Let A, Fig. 92,

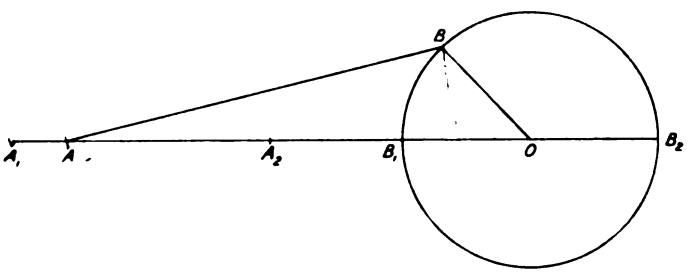

FIG. 92.

be the centre of the crosshead, B the centre of the crank pin. OB is the crank, O being the centre of the crank shaft. Let OB be drawn in any position, that is, making any angle such as AOB with the centre line of the engine. Set off the distance BA equal to the connecting rod and we have the proper position of A.

If B_1 and B_2 are the dead points of the crank pin, let B_1A_1 and B_2A_2 be each equal to the length of the connecting rod, and these are evidently the ends of the stroke of A. The distance of A from the end of its stroke is evidently the same as the distance of any point on the piston or piston rod from the end of its stroke.

If we want to find A's position pretty often we need not always make the above straggling drawing. Once for all, cut a template out of zinc plate or thin sycamore of the shape shown in Fig. 93. The edge CD is straight. The edge ED is an arc of a circle drawn to a radius equal to the length of the connecting rod, coming down at D at right angles to CD. The edge CE is of any shape we please.

Now, if this is used as a set square is used, the edge $C\,D$ fitting along the diameter or line of centres $A_1\,O\,A_2$, and if we use it to project from any position B of the crank pin down to A, as shown in the figure, then A will represent the position of the piston in its stroke, the ends of the stroke being represented by A_1 and A_2, A_1 being the end most remote from the crank. The student ought to practise this method in working exercises.

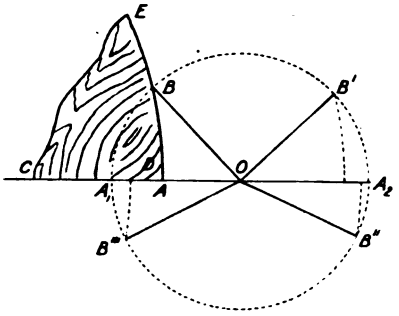

FIG. 93.

Note.—The student will see that instead of using a template (I much prefer the template because it keeps facts before us well) we may draw once for all the arc $E\,O\,F$, Fig. 94, with a radius equal to the length of the connecting rod.

When the crank is in the position $O\,B$, draw $B\,D$ parallel to the line of centres $A_1\,O\,A_2$, and the length of $B\,D$ is the distance of the piston from the middle of the stroke.

68. EXERCISE. Either by skeleton drawing method or the use of

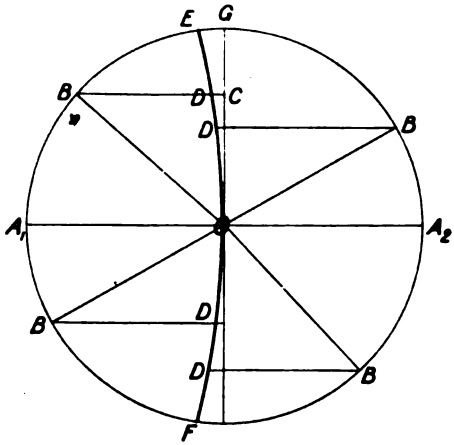

FIG. 94.

the template (the latter preferred), the crank being one foot long,

Find the distance of the piston from A_1 and from A_2.

1. When the connecting rod is 5 feet long; if $A_1\,O\,B = 30°$
2. „ „ „ 5 „ $A_2\,O\,B^1 = 30°$

Answers. $A_1A = 0{\cdot}158$ or AA_2 1·892, $A^1A_2 = 0{\cdot}108$ or $A^1A_1 = 1{\cdot}842$.

Note that A^1A_2 is less than A_1A.

EXERCISE 2. For angles $A_1OB = 0$, 15°, 30°, 45°, &c., find the distances A_1A and AA_2.

Find what these would be if the connecting rod were so long that we might regard the arc DE of the template as a straight line; in fact, as if the template were a set square.

Your answers must be carefully checked by the following table:—

AOB . . .	0°	15°	30°	45°	60°	75°	90°	105°	120°	135°	150°	165°	180°
A_1A . . .	0	·041	·158	·343	·575	·834	1·100	1·352	1·575	1·757	1·892	1·973	2·000
AA_2 . . .	2	1·959	1·842	1·657	1·425	1·166	0·900	·648	·425	·243	·108	·027	0·000

The following table gives the answer in case the connecting rod were infinitely long:—

Angle A^1OB .	15°	30°	45°	60°	75°	90°	105°	120°	135°	150°	165°
A_1A	·034	·133	·293	·500	·741	1·00	1·259	1·500	1·707	1·867	1·966
AA_2	1·966	1·867	1·707	1·500	1·259	1·00	·741	·500	·293	·133	·034

Examine and compare the numbers in these Tables.

EXERCISE 3. Steam is cut off in both in-going and out-going stroke when the crank has travelled 80° from the beginning of the stroke. Through what fraction of the whole stroke has the piston travelled in each case?

What would these fractions be if the connecting rod were infinitely long?

	5′ Conn. rod.	Infinite Conn. rod.
In-going	0·37	0·415
Out-going	0·46	

In a very great number of rough calculations it is sufficiently correct for our purposes to drop a perpendicular BA from B, the position of the crank pin, upon the line of centres, and to regard A as the position of the piston in its stroke, the ends of the stroke being A_1 and A_2. It is evident that in this construction the assumption is that the connecting rod is infinitely long.

If OB is an eccentric crank (see Art. 71), it will be found that this construction gives the position of the valve with very great

accuracy indeed, because the eccentric rod is very long compared with the eccentricity of its disc.

The student will notice that if in Fig. 96 B is a crank pin going in a circle round A, and if the block B moves in the straight slot $C\,B$ in the slide, the motion of any point in the slide is like that of a crosshead with an infinitely long connecting rod. This mechanism is sometimes used in small engines.

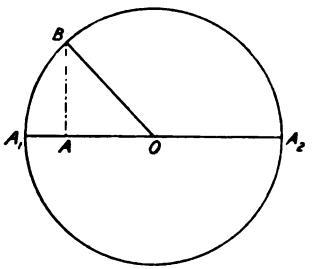

FIG. 95.

Again, if the slot is curved to the arc of a circle, the motion of the slide is exactly the same as that of a crosshead worked by a connecting rod whose length is the radius of the slot.

69. It is easy to show that when the piston is at A, Fig. 95, the distance $A\,B$ represents its **velocity** to scale if the connecting rod is infinitely long. The velocity at the middle of the path O is equal to the velocity of the crank pin in its path, and this gives us the scale, because at the centre the velocity is represented to scale by the radius of the circle. It is easy to show also that the **acceleration,** when the piston is at A, is represented to scale by the distance $O\,A$. The acceleration at A_1 or at A_2 is $0{\cdot}011\ n^2r$ or v^2/r if the crank is r feet long, making

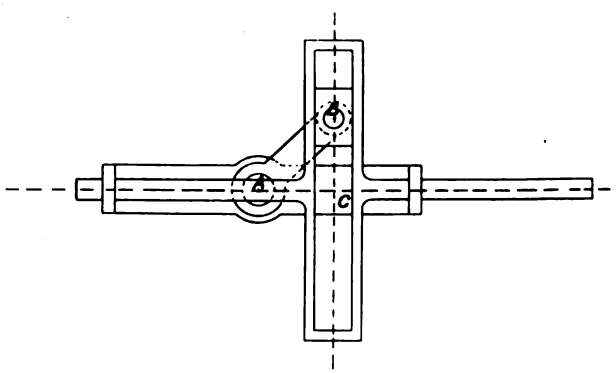

FIG. 96.

n revolutions per minute, or if v is the velocity of the crank pin. The student must remember that if the weight of a body is W lb. at London, $W \div 32{\cdot}2$ is its mass in engineers' units, and mass multiplied by acceleration is force. It is obvious that the accele-

rating force at the ends of the stroke is of the same value as the centrifugal force on the same mass if it existed on the crank pin.

70. There are many ways of proving the above statements. Here is the easiest, if I may assume that the calculus will in future be taught to elementary students. The fundamental idea of the calculus is that of a rate such as a velocity or an acceleration, and even the beginner must have this idea.

If then OA, Fig. 95, is called x, the distance of the piston to the left of its mid stroke, r the length of the crank, and if the angle A_1OB is called θ, then

$$x = r \cos \theta \quad . \quad . \quad . \quad . \quad . \quad . \quad . \quad . \quad . \quad . \quad (1)$$

If the crank moves with the angular velocity q radians per second ($2\pi n/60 = q$, if n is in revolutions per minute, or $2\pi f = q$, if f is what scientific people call the *frequency*, or the number of complete oscillations per second, or $2\pi/\tau = q$ if τ is the periodic time in seconds), then $\theta = qt$ if we count time t in seconds from the position where $\theta = 0$.

$$\text{Hence } x = r \cos qt = r \cos \theta \quad . \quad . \quad . \quad . \quad . \quad . \quad . \quad (2)$$

$$\text{Velocity } v = \frac{dx}{dt} = -rq \sin qt = -rq \sin \theta \quad . \quad . \quad . \quad . \quad (3)$$

$$\text{Acceleration } a = \frac{d^2x}{dt^2} = -rq^2 \cos qt = -rq^2 \cos \theta = -q^2x \, . \quad (4)$$

Evidently the velocity is greatest at mid stroke, and is v, the same as the linear velocity of the crank pin. The acceleration is greatest at the ends of the stroke, and is then equal to the centripetal acceleration of the crank pin, rq^2 or $4\pi^2f^2r$ or $4\pi^2n^2r/3600$ or v^2/r.

Notice that the acceleration is numerically equal to q^2 times the displacement x. This is the characteristic of simple harmonic motion (called S. H. M.), that the acceleration is proportional to the displacement. The subject, like that of periodic functions in general, is very fascinating, and its study is one of the most important for all engineers.

CHAPTER VII.

HOW THE VALVE ACTS.

71. FIG. 97 shows an **eccentric.** I want a student to understand at once that an eccentric disc and rod are simply a crank pin and connecting rod. *O* is a shaft to which the eccentric disc or sheave is keyed so that it rotates with the shaft. The eccentric strap *S E* in Fig. 97 consists of the two parts *S S* and *E E* bolted together so that they embrace the disc *D D* with no fear of their

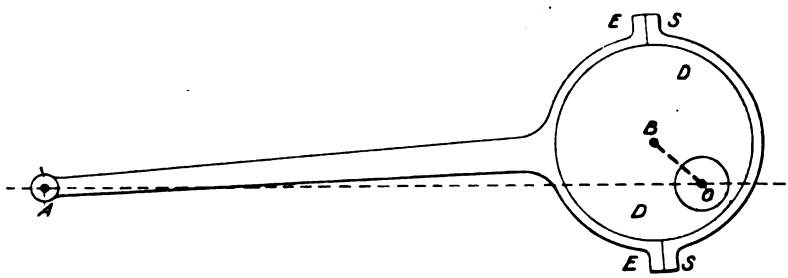

FIG. 97.

slipping off sideways. In fact *S S* and *E E* and the eccentric rod *E A* are all like one rigid piece working the pin *A*.

Now, it is evident that *B*, the centre of the eccentric disc, must move in a circular path round *O*, the centre of the shaft which is fixed, consequently *B* is exactly like the centre of a pin, a very large pin *D D*, and the eccentric straps and rod are simply a connecting rod. It is the great size of the pin *D D* which disguises this fact from a beginner.

Thus, if the points *A B O* of Fig. 98 are in the same positions as *A B O* of Fig. 97, or of *A B O* of Fig. 99, it is evident that their motions are the same. Or another way of putting it:—We are asked to work a pump or slider of any kind from the shaft *F F*, Fig. 100, by means of a crank; how shall we do it?

1. We can cut the shaft as in *I*, inserting a crank-pin *D D*. But notice that as we have cut the shaft, we cannot transmit much power through it for other purposes.

2. Do as in *I*, but make the pin larger as in *I I*, larger as in *I I I*,

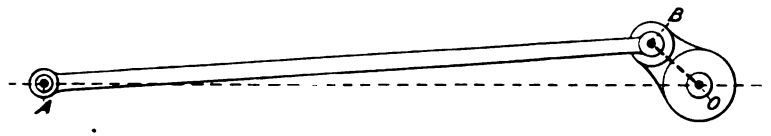

FIG. 98.

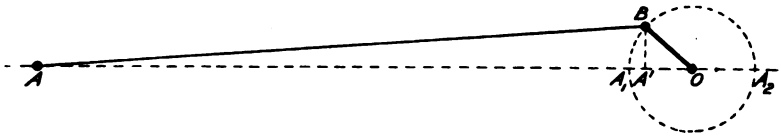

FIG. 99.

larger still as in *I V*. But if this is made the pin at the end of a connecting rod we call the arrangement an eccentric disc and eccentric rod.

Hence we take Fig. 97 to be represented by Fig. 99. We call

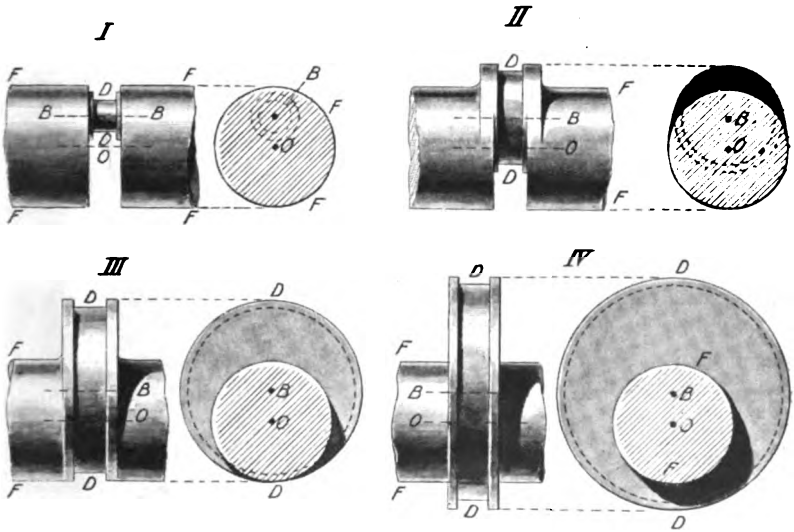

FIG. 100.

O B the eccentric crank, *A B* being the eccentric rod which is really a connecting rod. If we drop the perpendicular *B A'* from *B* upon *O A*, the direction of motion of the pin *A*, we may say that *A* is at the distance *O A'* to the left of its mid stroke. In fact, the position

of A' between A_1 and A_2 represents the position of A between the ends of its stroke.

72. EXERCISE 1. An eccentric crank is 2 inches long, when the angle $A\,O\,B$ is 130°, where is A? That is, say how far A is to the right of its mid position.

Answer. 1·286″ to the right of its mid stroke.

2. In the last case, when $A_1\,O\,B$ is 0°, 45°, 90°, 150°, 220°, 295°, where is A? The answers are given in this table.

Answers—

Angle . . .	0°	45°	90°	150°	220°	295°
A_1A^1 . . .	0″	·586″	2·00″	3·732″	3·532″	1·155″

73. If a teacher wishes to give a thorough understanding of the simplest valve motion to his students, he will have **a model made** something like what is shown in Fig. 101. Let no one think that he can easily arrange a better model. This is the outcome of many years' experience in the teaching of students. It is meant to enable students to understand clearly how *lap* and *advance* affect the distribution of steam. I have found that if a man gets a wrong notion about lap and advance at the very beginning of his studies, it is exceedingly difficult for him to get rid of it, and, although it seems absurd that a man should pick up a wrong notion about this simple matter, it will be found not only possible, but probable.

Let then the student have a large model to work with, like what is shown in Fig. 101. He ought to be able to walk all round it and to make the following measurements:—

1. There is a graduated circle which enables us to measure accurately the angle $R\,K\,H$ which the crank $K\,H$ makes with the line of centres of the engine. I always call this angle θ, the angle passed through from the near dead point.

2. There is a graduated scale which enables us to measure the distance of the piston C from the outer end of its stroke.

3. There is a graduated scale which enables us to measure the distance of the valve $W\,W$ from the *middle* of its stroke. I always call the distance of the valve to the right of the middle of its stroke, x.

4. There is a graduated circle L which enables us to measure accurately the angle which the eccentric crank is ahead of the main

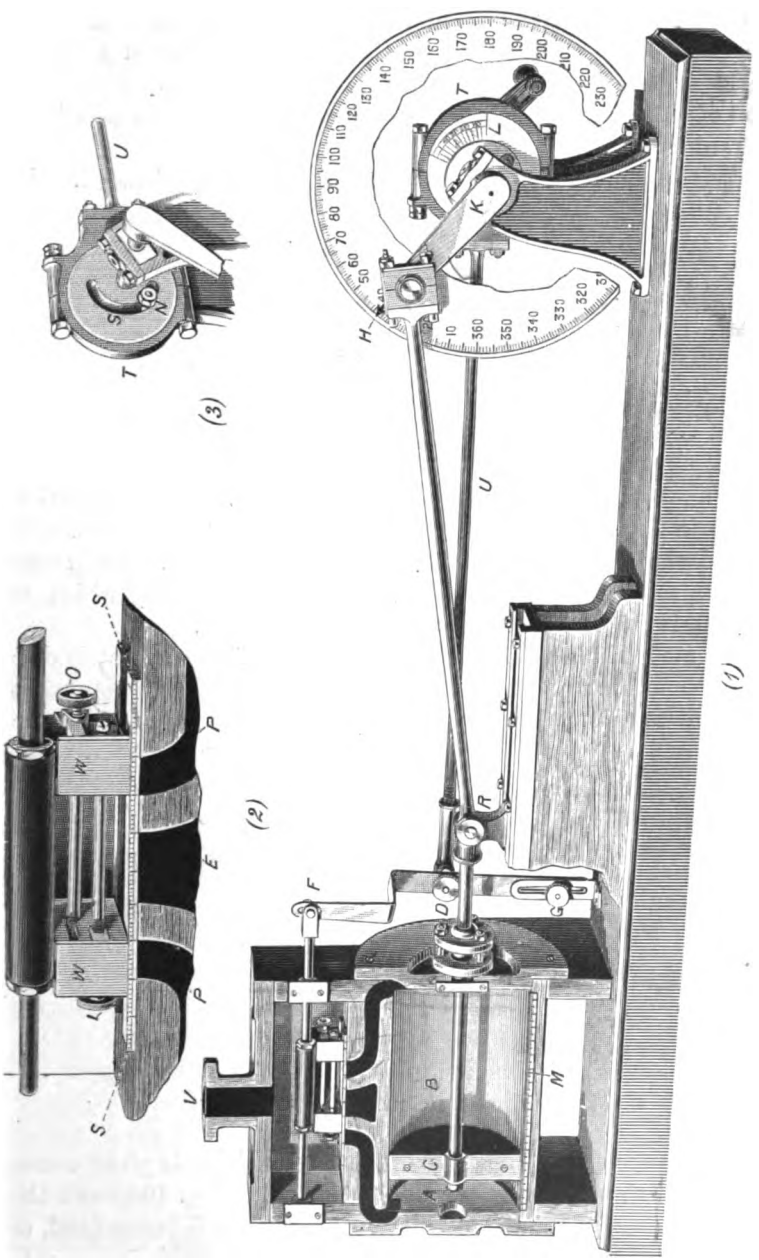

FIG. 101.
Model for measuring the effects of advance and outside and inside lap and travel on the distribution of steam. *Laps* altered by the screws I and O. Advance by the nut N. Travel by G.

crank. For I am enabled by my model to vary this angle, as if I could unkey my eccentric disc and key it again in a new position. I do not use keys, however, but fasten it in any position I please by means of a bolt *N* and slot *S* in (3). When I do change the position of the eccentric disc, I like to know how much ahead of the main crank it is.

Ahead, what do I mean by *ahead?* I mean ahead if the

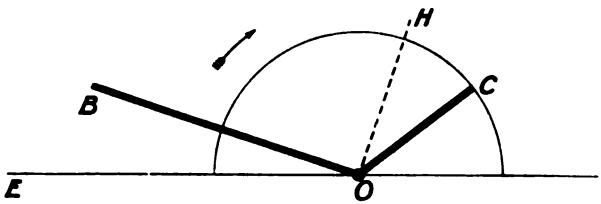

FIG. 102.

arrow, Fig. 102, shows the direction of motion. In the position of things in Fig. 102, *O B* is the main crank, *O C* is the eccentric crank, and the angle *B O C* is what I like to measure. The angle *B O C* is always greater than 90°, and the amount by which it exceeds 90° is called **The Advance.** This is *H O C*.

In my model it would be difficult to take off one eccentric disc and put on another; I should like to do something like this because it is important to change the eccentricity of the eccentric, that is, the

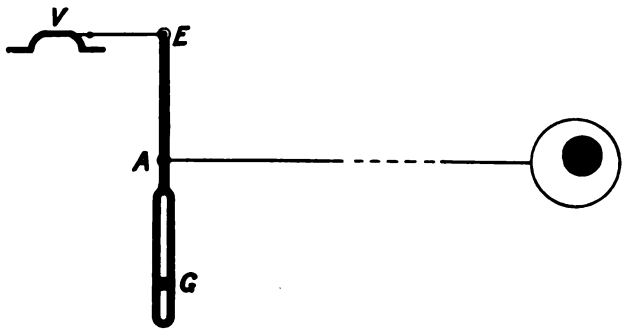

FIG. 103.

length of the eccentric crank. Now, on my model I do what comes very nearly to the same thing. I do not let *A*, of Fig. 103, work the valve directly. *A* is a pin on the lever *GE*, the pin *G* being fixed, or the fulcrum, and I am able to change the position of this fulcrum, to raise it or lower it, without altering the positions of *A* or *E*. Now,

by changing G we cause the motion of E to be greater or less in amount, but it is always a magnification of A's motion. In fact, by changing G, we alter the half travel of the valve just in the same way as if we altered the eccentricity of the eccentric. Therefore on my model I have the power of altering the half travel and the advance.

It might be said that since the eccentric is really a crank, we ought to use a crank for it on the model, and then it would be easy to alter its length and so get a different travel of valve without using a lever. But in the first place, a student would prefer to see on the model an actual eccentric; secondly, the lever is a very good way of altering travel; thirdly, using the lever enables us to put the valve *above* the cylinder and the motions of the parts are all visible to a class of students.

Now when the model is being used let the student imagine that

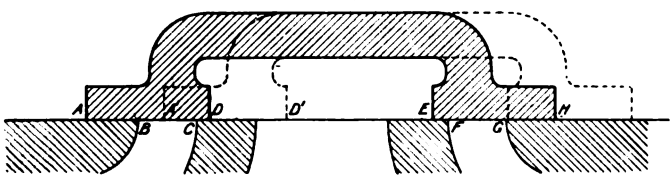

FIG. 104.

the half travel of the valve is really equal to the eccentricity of an eccentric working the valve directly without a lever as the valve is worked in Fig. 15.

I am in the habit of showing the valve motion *above* the piston motion, as in Fig. 106, and the student must get to imagine the main crank C and the eccentric crank E^1 to be revolving at the same rate. He ought to make use of such a diagram as Fig. 107, where the eccentric crank $O\,C$ is shown in its proper angular position ahead of $O\,B$ the main crank.

Let the valve be drawn in its middle position as in Fig. 104. The distance $A\,B$ or $G\,H$ is called the outside lap; the distance $C\,D$ or $E\,F$ is called the inside lap. The outside lap is often called **the lap.** In my model I can at once alter the amount of the outside by means of the screw marked O, or of the inside lap by the screw I, or reduce them to nothing.

The most important thing for a beginner to understand is that **when we alter the advance and the lap and the half travel, we alter the distribution of steam in an engine cylinder.**

I have heard of very few real engines in which an attempt has been made to vary the lap when the engine is running. Here we only indicate such a variation so that students may observe the effect of more or less lap on a mere model.

Exercises with the Model.—(1) Let a student adjust so as to have no outside or inside lap. Let the eccentric crank be at right angles to the main crank. This is what we call the *normal valve* with no advance. On working the model it will be found that steam is admitted and cut off at the ends of the stroke so that there is no expansion.

(2) It is now worth while to see what is the effect of trying some lap and no advance, or no lap but some advance, and I leave this to the student himself. He ought to draw the possible indicator diagrams, and this is an excellent exercise even for the most advanced students who know the effects of speed.

(3) Give lap to the valve. Advance the eccentric beyond the normal position; this additional angle, which is the excess beyond 90° by

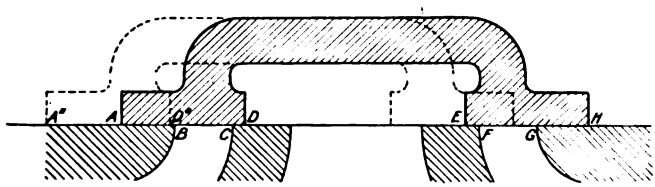

FIG. 105.

which the eccentric is ahead of the main crank, is called *the advance*. It will now be found that we effect our purpose of cutting off before the end of the stroke. After a student has watched the effect he has no difficulty in discovering the reason.

74. In Fig. 104 the full lines show the valve in its mid position. I shall speak only of what occurs to the left-hand port $B\,C$. The dotted lines show the valve displaced to the *right* of its mid position by a distance which I call x. That is, $A\,A^1$ is x. Now the opening of the port to steam is $B\,A^1$, or

$$\text{Opening to steam} = x - \text{outside lap}. \quad . \quad . \quad .$$

If, therefore, for any position of the piston or crank we want to know what is the opening of the port to steam, our only difficulty is in finding x.

Again, look at Fig. 105, where the dotted lines show the valve displaced to the *left* of its mid position. I often call this displacement $D\,D'$ by the name y, although it is merely a negative x. The

opening of the port to exhaust is $C D'$, and $C D$ being the inside lap, we see that

Opening to exhaust = y − inside lap . . . . (2).

The problem to be solved is :—For a given position of the piston, what is the opening of the port to steam or exhaust ?

If we are told the position of the piston, it is easy to find the position of the main crank (that is, the angle θ, which it makes with the dead point), and hence our problem really is, "When we know where the main crank is, where is the valve ?"

That is, if θ is given, what is x? We have a very easy way of answering this question, and it must be very clearly understood that this one simple answer is really the key to all the problems which come before us. If we know the distance of the valve to the right of its mid stroke, we need only subtract the lap and we at once know how much opening there is to steam ; or if we know the

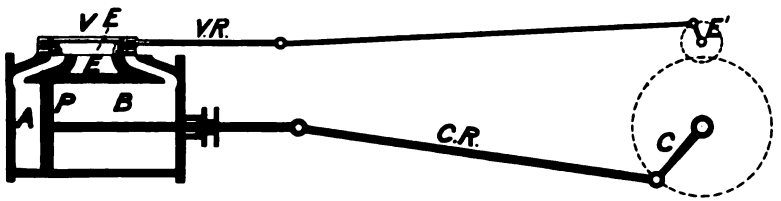

FIG. 106.

distance of the valve to the left of mid stroke, we subtract the inside lap and we see the opening to exhaust.

Think of the valve V being worked directly as in Fig. 106 by the eccentric crank E^1 on a shaft on the same level as the valve, this shaft revolving exactly at the same rate as the main crank shaft so that C and E^1 are at the same angle with one another always; for any position of C the position of E^1 may be drawn, and the displacement of the valve is easily found.

Notice that $O B$ (Fig. 107), the main crank position, being given, we draw $O C$ (to represent by its length the half travel of the valve or the eccentricity of the eccentric), and we take care that $O C$ shall be ahead of OB by an angle equal to 90° + advance. The student can have no difficulty in seeing that the valve is the distance $O C'$ to the right of its mid stroke, and this is x which we want to know. **Here then is a rule.** We may carry it out as in Fig. 107. $O B$ is given, that is, the angle $A O B$ is given ; make $B O D = 90°$, make $D O C$ the advance, let $O C$ be the half travel, drop the perpendicular, and $O C^1$ is the answer.

75. But the rule is thought to be a little too clumsy, at all events there is a much simpler rule **invented by Zeuner.** Draw *A O G* (Fig. 108) horizontally to represent the dead point position or centre line of the engine. Draw *F O I* at right angles to *A O G*. Make the angle *F O E* equal to the advance, and produce *E O* to *H*. Set off *O E* = *O H* = the half travel. On *O E* and *O H* as diameters describe circles. We now have a diagram which gives us what we want with much less trouble than before. It will be found that if we draw the direction *O B* of the main crank from *O*, the distance $O B_1$, is the very answer wanted by us; the distance $O B_1$ is the distance of the valve to the right of the middle of its stroke when the main crank is in the position *O B*. Thus in Fig. 110 I have shown the main crank in a number of positions. The

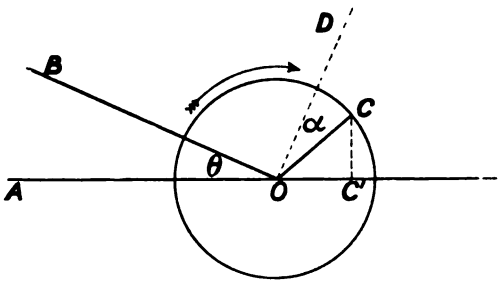

FIG. 107.

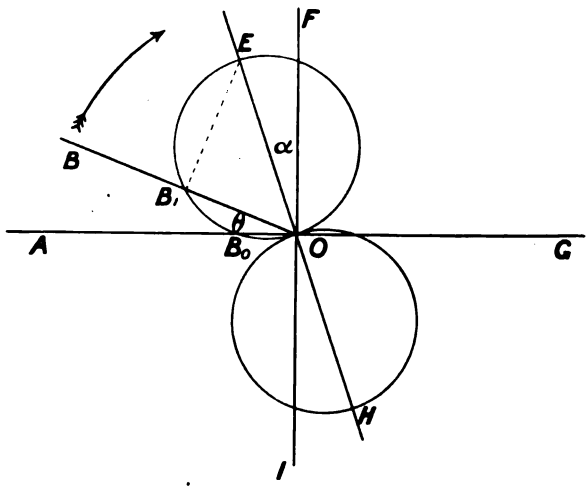

FIG. 108.

distances *O B* represent in every case the distance of the valve to the right of its middle position. The distances $O B^1$ are distances to the *left* of mid position.

Even if students see how the rule is arrived at they ought to work exercises by the method of Fig. 107, and also by this method,

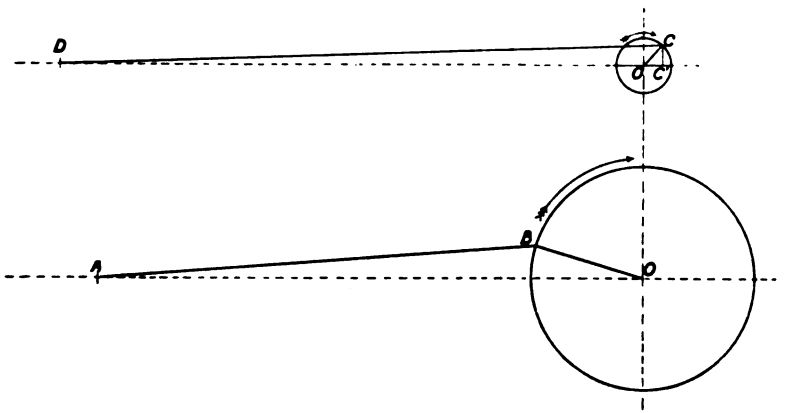

FIG. 109.

and in each case they ought to test the accuracy of their answer by the model.

Thus if Fig. 111 is a Zeuner diagram, the angle $F\,O\,E$ being the advance, the distances $O\,E$ and $O\,H$ being each the half travel, $O\,M$ being the dead point position. With radius $O\,P$, equal to the outside lap, describe the arc $A\,Q\,P\,K$. With radius $O\,T$ equal to the inside lap, describe the arc $R\,T\,C$. Now note that each of these arcs will do your subtraction (of lap from x, of inside lap from y) without giving you any trouble. Thus if $O\,S\,B$ is any position of the main crank; $O\,B$ is x, and as $O\,S$ is the lap, $S\,B$ shows at a glance the opening of the port to steam. Again, if $O\,B^1$ is the position of the main crank, $O\,B^1$ is y, the distance of the valve to the left of its new

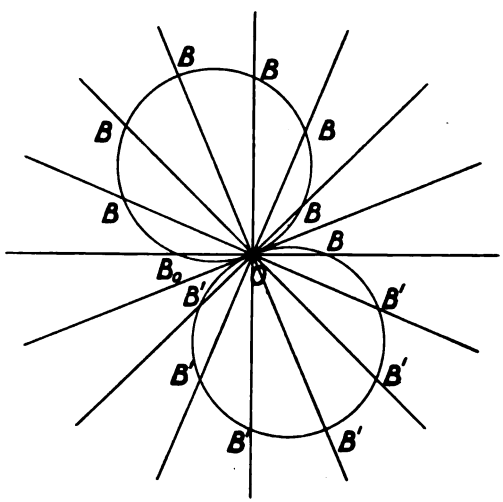

FIG. 110.

position; and as $O\ V$ is the inside lap, the distance $V\ B^1$ shows at a glance the opening of the port to exhaust.

76. EXAMPLE 1. Find the positions of the main crank when the valve is just opening the port to steam (we call this the admission); when just closing to steam (we call this the cut off); when just opening to exhaust (we call this release); when just closing to exhaust (or when compression is beginning).

Answers. Produce $O\ A$, $O\ K$, $O\ R$, and $O\ C$, and these are the positions required.

EXAMPLE 2. Where is the main crank when the port is most open to steam? *Answer.* In the position $O\ E$.

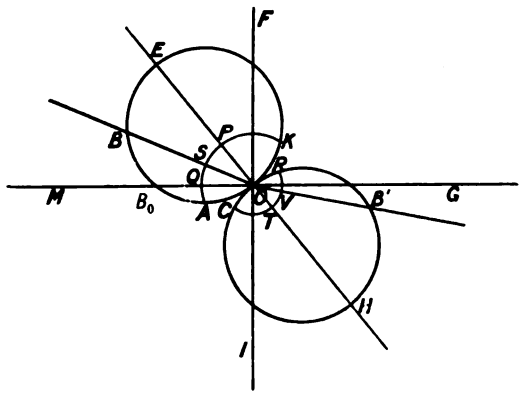

FIG. 111

EXAMPLE 3. Where is the main crank when the port is most open to exhaust? *Answer.* In the position $O\ H$.

EXAMPLE 4. At the beginning of the stroke what is the opening of the steam port? *Answer.* $B_0\ Q$. Observe that $B_0\ Q$ is called the **lead of the valve.**

77. Proof of our Graphical Rule. If the student has drawn Fig. 107 and Fig. 108 for the same half travel, advance and θ, he will find that the triangle $C\ O\ C^1$ (Fig. 107) is exactly the same as the triangle $E\ O\ B_1$ of Fig. 108, and of course, if this is so, the rule needs no further proof.

$E\ O$ is the diameter of a circle, and as the angle in a semicircle is always a right angle, the angle $E\ B_1\ O$ is a right angle. Also we made $O\ E$ the same as $O\ C$, or the half travel. Now, in Fig. 107

$$\theta + 90^\circ + a + C\ O\ C' = 180^\circ$$

and in Fig. 108, $\theta + a + E\ O\ B_1 = 90^\circ$

It is therefore obvious that $E\,O\,B_1 = C\,O\,C^1$. Hence we have two right-angled triangles, whose hypotenuses are equal, and one other angle in each, therefore the triangles are the same, and $O\,C^1 = O\,B_1$. It is easy in the same way to see that the intercepts on the lower Zeuner circle represent displacements of the valve to the left of its mid position.

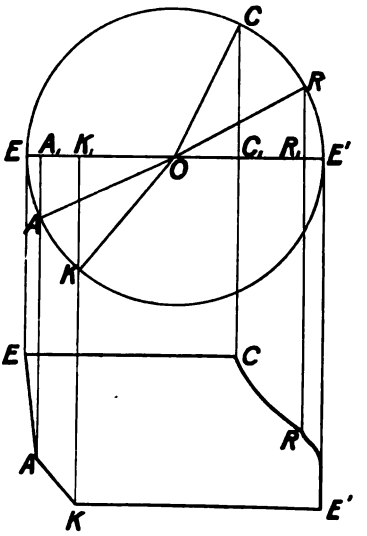

Fig. 112.

All that I have stated here might have been given in a few words, and indeed the whole thing is exceedingly simple, but I advise a student to work exercises like the above, and make very sure that he understands the rule and its proof.

78. Having the positions of the main crank of the engine when the four events take place, **to draw the hypothetical indicator diagram.** Neglecting the angularity of the connecting rod, it is obvious that this is the answer;—With O as centre describe any convenient circle, $E\,C\,R\,E^1\,K\,A$, Fig. 112, and project from the points, A, E, C, &c., in a direction at right angles to $E\,O\,E^1$, the line of centres. Evidently A_1, C_1, R_1, K_1 show where the piston is relatively to the ends of the stroke E and E^1 when the four events take place. Draw $K\,E^1$ and $E\,C$ parallel to $E\,E_1$ to represent the admission and back pressures to any convenient scale of measurement. It is not necessary to indicate the zero line of pressure. Draw the expansion curve $C\,R$, the compression or cushioning curve $K\,A$, the release curve $R\,E'$ and the admission $A\,E$. It is only necessary to draw these reasonably like what such curves usually are, but it is convenient to have sharp corners to remind us that we are studying the times of occurrence of four important events. When a student has inked-in such a diagram as the above, in red, he may, if he thinks it worth while, round the corners, to

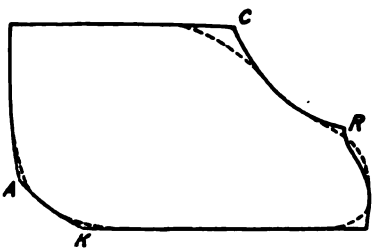

Fig. 113.

show that the events will really occur gradually, with a certain amount of wire drawing, as shown in Fig. 113 in the dotted lines. I advise the student not to draw these dotted lines, however. It is well to know that the inside lap is sometimes a negative quantity in quick-moving engines, and the points C and R, Fig. 41, now find themselves on the $O\,B\,E$ circle.

If a student neglects the angularity of the connecting rod, and if there is the same lap for both ends of the cylinder, having drawn the diagram for one end, he has the diagram for both ends; but if he wishes to take account of the angularity of the connecting rod, let him project the points in the figure to the diameter, not by a set square, but by the template of Fig. 93. Thus he will

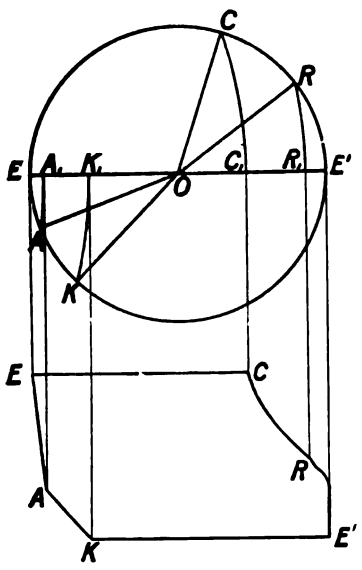

Fig. 114.

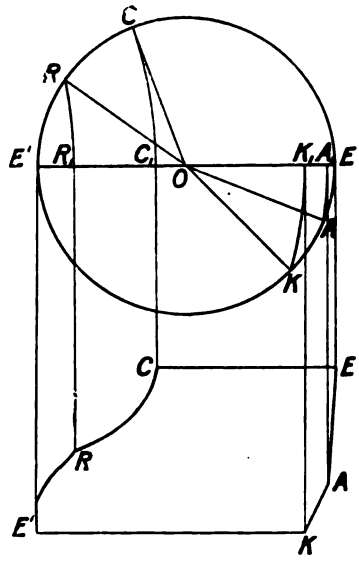

Fig. 115.

obtain the positions of the piston, A_1, C_1, R_1 and K_1 (Fig. 114), when the four events occur. If he projects from these points by lines at right angles to $E\,O\,E^1$, and proceeds as before, he will get the more probable indicator diagram. For the other side of the cylinder, instead of taking a short cut to the answer, which ought at once to suggest itself to the student, let him draw the actual positions of the crank when the four events take place; that is, let him set $O\,A_1$, $O\,C_1$, $O\,R$ and $O\,K$ of Fig. 114 forward 180°. Thus he will have Fig. 115; projecting on the line of centres $E\,O\,E^1$ with a template as before, and then projecting with straight lines at right angles to $E\,O\,E^1$, we may draw the diagram $E^1\,C\,R\,E\,K$ of Fig. 115. The student who carries this out must meditate on the fact that in the *in* stroke there is a longer admission than in the *out* stroke. If we want to remedy this, we can do so by diminishing the lap on the out stroke side, and this is often done in marine engines where the weight of the piston and other parts must be lifted in the *out* or *up* stroke.

Instead of drawing two figures like 114 and 115, let the student who has drawn Fig. 114 merely produce the lines $O A_1$, $O C_1$, &c., and draw Fig. 115 on the top of Fig. 114. This will probably bring home to him better the effect of angularity of the connecting rod in altering the diagram. He will have both his diagrams on one sheet of paper just in the positions in which we usually find them when taking diagrams as shown in Fig. 78.

79. EXERCISE. In each of the following cases find the positions of the main crank at admission, cut off, release, and compression. Find also the *lead*. The outside lap is 0·52 inches, inside lap 0·15 inches.

Half travel in inches.	Advance in degrees.	*Answers in degrees.* POSITIONS OF CRANK.				Lead. in inches.
		Admission.	Cut off.	Release.	Compression.	
2·10	25	10·7°	39·3°	20·9°	29·1°	0·37
1·68	39	21·0°	57·0°	33·9°	44·1°	0·54
1·42	51	29·5°	72·5°	44·9°	57·1°	0·58
1·28	67	43·0°	91·0°	60·3°	73·7°	0·66
		Before beginning of stroke.	Before end of stroke.	Before end of stroke.	Before beginning of stroke.	

For each of the above cases let the hypothetical indicator diagram be drawn by beginners. Advanced students will draw diagrams for the two sides of the piston on the assumption that the connecting rod is five times the length of the crank.

80. *Three Important Exercises for Beginners.*

In each of the following cases find the positions of the main crank at admission, cut off, release, and compression. Draw the hypothetical indicator diagrams. Each of them shows the sort of change that occurs when we shift one of the usual gears employed to work slide valves. In each case the lap may be taken to be 0·8″ and the inside lap 0·3″.

I. A Stephenson or Allan link motion, open rods.

II. A Stephenson or Allan link motion with crossed rods.

III. The Gooch or Stewart Finck motion or any of the numerous forms of radial valve gear.

I.

Half travel in inches . . .	2·50	2·10	1·70	1·52
Advance in degrees . . .	30	40	50·9	69·2

II.

Half travel in inches . . .	2·50	2·30	1·55	1·20
Advance in degrees . . .	30	36·3	46·0	63·2

III.

Half travel in inches . .	2·50	2·05	1·65	1·35
Advance in degrees . . .	30	38	49·3	66·6

The advanced student will draw these indicator diagrams for both sides of the piston, assuming a connecting rod five times the length of the crank. The lesson to be learnt by the elementary student is, however, the more interesting. This is one of the cases in which actual drawing by a student himself is of the greatest importance. If he uses four different colours of ink for each set, and meditates on his results, he will get exact notions of what occurs when we shift from full gear, giving more and more expansion in each of the above cases. He will note that in I. the *lead* increases with more expansion; in II. it diminishes, whereas in all such gears as III. the lead is constant at all grades of expansion. It would be easy for me to give these interesting diagrams, but a student can draw them all in much less than an hour.

I shall now proceed to show how by means of the various gears we can produce the above-mentioned changes in the distribution of steam.

A more advanced treatment of the subject will be found in Chap. XXVIII.

81. It is worth while to mention that many small steam engines which we wish easily to reverse (such as steam starting engines, &c.) have no lap and only one eccentric, with no advance. A simple slide valve converts the steam space into an exhaust space, and *vice versâ*.

CHAPTER VIII.

VALVE GEARS.

82. We now know that if $O\,C$ (Fig. 116) represents the main crank of the engine, and if $O\,A$ is the eccentric crank; knowing the outside and inside lap of the valve, if we also know the angle $D\,O\,A$ (the advance) and OA (the half travel), we know the probable indicator diagram. Now imagine that we have a means of suddenly increasing the advance of the eccentric to $D\,O\,A^1$ and of making the half travel less; let $O\,A^1$ represent it; it is evident that we shall alter the nature of the distribution of steam. Imagine that we have a method of suddenly altering the position of the eccentric $O\,A$ to the position $O\,B$. A student must see that, by doing this we have completely altered the motion of the valve and made it suit a reversed direction of motion of the engine. But there is no great satisfaction in mere book study of this; we must have before us an actual model of an engine, such as my own, in which I am able suddenly to slacken the fastening of the eccentric disc to the shaft and let it change from the $O\,A$ to the $O\,B$ position, and it at once becomes evident that we have reversed the engine. There is no great satisfaction in putting this subject before the student without some kind of model. A bright lad takes in some sort of idea of what occurs, and, mainly by

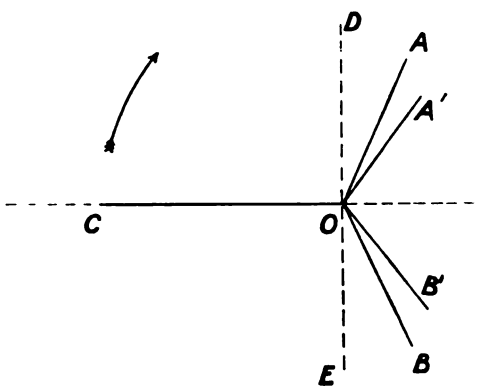

Fig. 116.

faith in his books, believes he sees the whole thing clearly. But what a pity it is that there should not be a model to show one's class exactly how it is that if the valve was going successively through the positions 6, 7, 8, 9, &c., Fig. 20; the shifting of the eccentric alters it so that it is going through the positions 6, 5, 4, 3, &c.

Now this slackening and refastening of the eccentric is a plan that has often been carried out, but we effect exactly the same object in the following way.

83. There are six kinds of **link motion** and perhaps ten good kinds of **radial valve gear**. They are employed in working the common slide valve, and they enable us to alter the advance and half travel of the valve, letting the engine go in either direction.

There are two eccentrics A and B, one in the position OA of Fig. 116 (see also Figs. 284, &c.), the other in the position OB, being

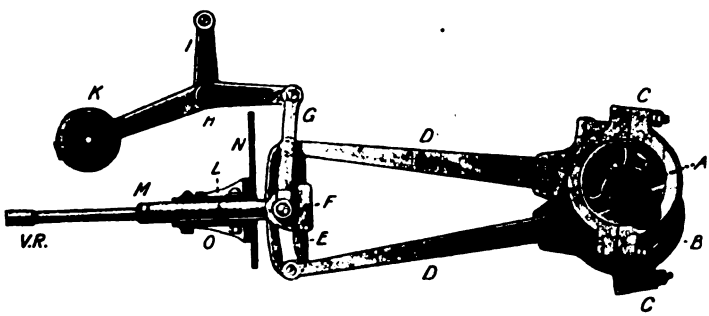

FIG. 117.—STEPHENSON ARRANGED FOR LOCOMOTIVE, LINK SHIFTS, BLOCK NOT; LINK CONCAVE TO SHAFT.

symmetrically placed relatively to the main crank. Their rods end in pins on a slotted link, which is hung from the reversing link G. When G is lowered to the position known as full forward gear the eccentric A alone works the valve because a block on the end of the valve rod VR keeps in the slot. When G is raised high, the eccentric B alone works the valve. Fig. 117 shows the link in what is called mid gear, and it is evident that by lifting and lowering the link we have many conditions of working that are intermediate between full forward and full back gear. It is quite easy to show, but it is a little beyond the scope of this very elementary treatment of the subject, that intermediate positions of the gear mean a less travel and a greater advance than the two extreme positions.

It is only when the main crank is in its outermost position, most remote from the cylinder, that we look at the crossing or non-crossing of the rods when we want a *name* for the valve motion, because any one can easily see that what

we call open eccentric rods will appear crossed in certain positions of the engine.

Gooch's Link, shown in Fig. 119, is not lifted or lowered, it merely swings nearly horizontally hanging from *B*. A block *E* is lifted or lowered in the slot of the link, and this block is at the end of a radius bar *D* which gives

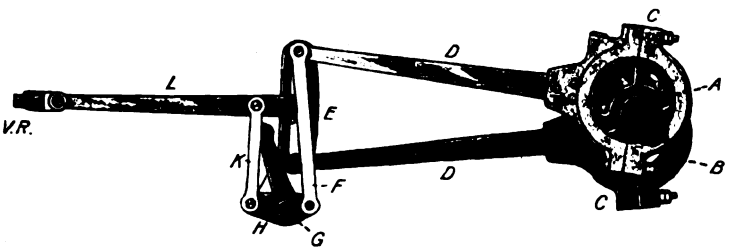

FIG. 118.—ALLAN ARRANGED FOR LOCOMOTIVE: LINK SHIFTS, BLOCK SHIFTS, LINK STRAIGHT. Balanced weigh shaft G causes link to rise and block to fall or *vice versâ*.

the valve its motion. In the **Allan Link** motion, Fig. 118, the straight link *E* is lowered, and the radius bar block is lifted, or the link is lifted and the radius bar block is lowered. We may put it in this way—

To change the gear—

Stephenson, link lowered or raised, *block not*.

Gooch, block raised or lowered, *link not*.

Allan, link lowered when block raised, or link raised when block lowered.

In any of these we may have either open or crossed eccentric rods, so that there are really six varieties of link motion. The Stephenson motion with open rods is much more generally in use than any of the others.

Links are either of the "slotted" or "solid bar" or "double bar" forms. In the second and third forms the ends of the eccentric rods may be in the arc of

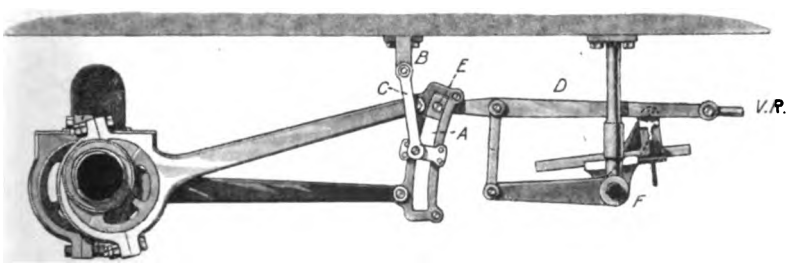

FIG. 119.—GOOCH ARRANGED FOR LOCOMOTIVE: BLOCK SHIFTS, LINK NOT, LINK CONVEX TO SHAFT. Balanced weigh shaft F causes D E to rise or fall.

motion of the centre of the block. Only in the double-bar form, now most general in large marine engines, can the end of either eccentric rod really coincide with the block. But there is no advantage in such coincidence.

84. To Shift the Gear.—In locomotives it is very usual to have a lever like that of Fig. 63 on the footplate of the engine. By means of this both engines are shifted in gear at the same time. See Fig. 62.

Note that as there are two cylinders on a locomotive, and therefore two link motions and therefore four eccentrics, the whole gear looks very much more difficult to understand than it really is.

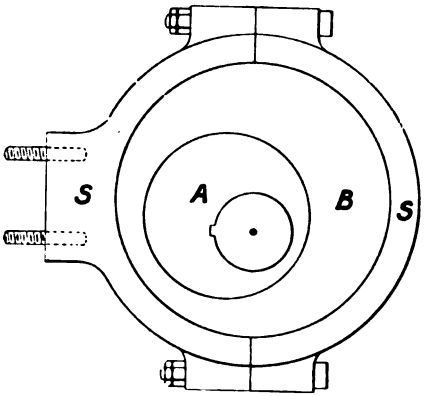

FIG. 120.—ARMINGTON AND SIMS ECCENTRIC.

The Armington and Sims eccentric disc is really in two parts, A and B. The governor causes a relative motion between them, so that sometimes there is a large throw and about 30° advance, and sometimes a smaller throw and a greater advance.

In a stationary engine with link motion, if the engine is small, a reversing lever like that of Fig. 63 is used. But if the engine is larger, so that the gear is more massive, even if its weight is balanced, it is usual to employ a capstan wheel and worm gearing if the gear is to be shifted by hand, and in the largest marine engines a special engine is employed to give power to shift the valve gear quickly. This is one of the things which make a marine engine complicated looking. Imagine 20,000 horse-power to be given out

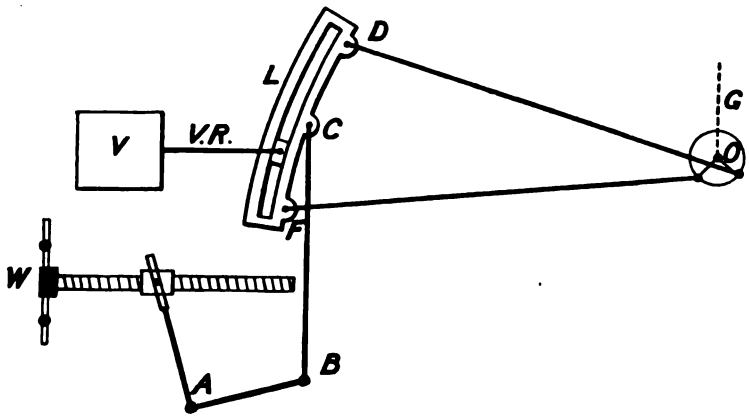

FIG. 121.

Illustrating how we shift the links in small engines. Where the weigh shaft A turns it moves all the links.

by two triple cylinder engines which have six link motions with their twelve eccentrics—all to be shifted simultaneously.

Fig. 121 shows the capstan-wheel *W*, turning a screw on which

a nut moves so that the weigh shaft A turns on its axis through an angle, which enables arms $A\,B$ and $B\,C$ to shift each link of two or three cylinder engines at the same time. This is a common reversing motion for small compound engines.

For engines of about 2,000 horse-power and upwards, we sometimes have a hand wheel or lever which moves a slide valve on a small steam cylinder; this admits steam to one side or the other of a piston, whose motion like that of the above nut W, causes the weigh shaft to turn.

In Brown's gear there is a "cataract" piston on the auxiliary steam piston rod to prevent too rapid motion. The motion causes the auxiliary engine valve to come back to its shut position. There is always an independent hand gear attached to the steam gear for use in case of accident. Brown uses also a simple governor arrangement which brings all the links to mid gear if the engine exceeds a certain critical speed.

In some modern locomotives the pressure of steam or the pressure of air (in case the Westinghouse brake is used on the train) is used to assist in shifting the gear.

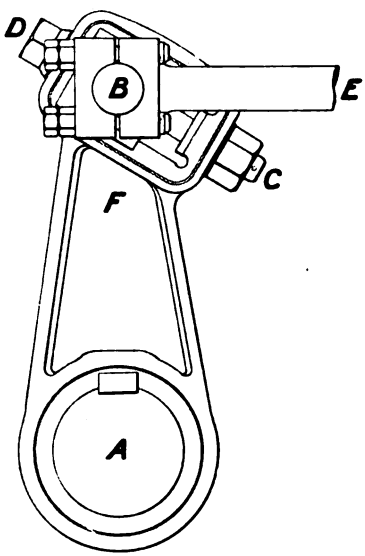

FIG. 122.—INDEPENDENT LINKING UP GEAR.

A is the weigh shaft. B E is the reversing rod leading to any of the links. The screw D C enables the adjustment of any one link to be different from the others. D C is nearly at right angles to B E in the astern position.

85. Hackworth Gear. This is the parent of all **the radial gears**. It is shown in Fig. 123, as applied to a vertical engine. The eccentric disc is placed 180° away from the main crank. The block B at the end of the eccentric rod can slide in a slot, which is often straight, but may be curved. The pin D in the eccentric rod works the valve.

To alter this gear we merely alter the angle of inclination of the slot to the horizontal. In forward gear, it inclines upwards as shown. If we wish to reverse the engine, we must turn it round so that it slopes downwards. The hand wheel C, and worm E, working on the worm sector F, are used for reversal or alteration of the gear.

Instead of a slot to guide B, we may have a swinging link ($N\,J\,B$) of Fig. 124. It is evident that B will move in the arc of a circle with N as centre. To reverse this form of the gear (called the **Marshall gear**) we have merely to move N

round the dotted path. For convenience in doing this, N is usually a pin at the end of an arm ($N L$), and by moving this arm about L as a centre, the gear is shifted. The Angstrom gear also is simply the Hackworth, in which the guidance of B in a nearly straight path is effected by using a parallel motion.

86. Joy Gear. Fig. 126 shows the Joy gear. C is the crosshead, $C E$ being the direction of its motion, the centre line of the engine. K is the crank pin. J is a pin on the connecting rod, one end of the link $J L$, the other end L swinging in the arc of a circle, of which the fixed pin M is the centre.

Notice that the point J moves nearly in an ellipse, shown dotted as $J N$. The pin A in the link $J L$ moves in a curve $A P$ which is

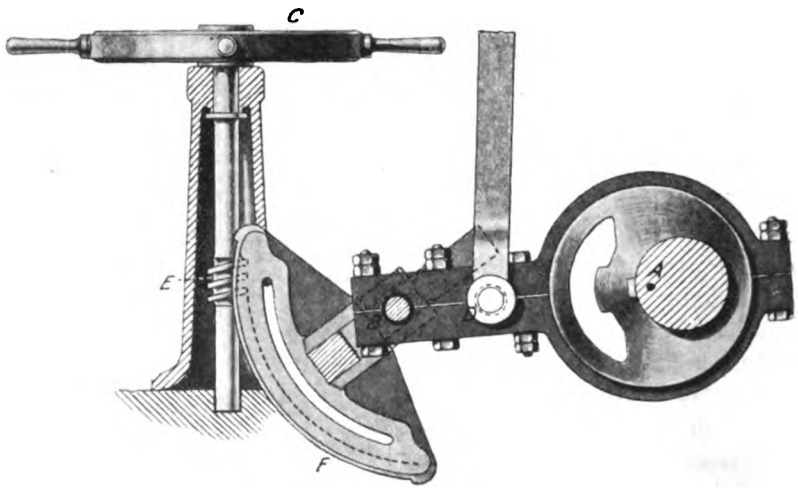

FIG. 123.—HACKWORTH.

lopsided in shape. Now the link $A B D$ is important. We know the path of A. The pin B is in a sliding block which moves in the curved dovetailed groove or slot $Q R$. The pin D works the valve. Fig. 126 shows the position of the groove for full forward gear. Changes in its inclination cause changes in the gear.

87. Notice that the Hackworth, Joy, and many other gears satisfy this definition, "There is a piece, one point of which (A) moves in a curve more or less nearly circular (in the Hackworth it is truly circular, because A is the centre of an eccentric sheave); another point (B) has a reciprocating motion nearly in a straight line; another point (D) works the valve."

But in studying any of the twenty forms of radial valve gear, the student will find the following definition much more helpful—

There is a piece ($A B$) whose average direction is at right angles to the valve rod; a pin (D) in the piece ($A B$) works the valve. Speaking only of motions in the direction of the valve motion or piston motion; A moves either synchron-

ously with the piston or half a period ahead of it, in any case reaching the ends of its stroke as the piston reaches the ends of its stroke; *B* is a quarter period behind or in front of *A*, being always at the middle of its stroke when *A* is at the end of its stroke. *A* is a half period ahead of or behind the crank in the Hackworth gear, and consequently *D* is *between* *A* and *B*. *A* is synchronous with the crank in the Joy gear, and consequently *D* is in *A B* produced.

When a student takes up the theory of these gears, he will find that the above definition makes one theory do for all the gears. (See Art. 312.)

88. If we try, using a single eccentric or any form of link motion or radial valve gear, to cut off earlier than at one-third of the stroke, we get a poor result; there is too much wire drawing at the cut off and the release is earlier than we desire to have it. Some of the gears are better than others in this respect, in intermediate positions giving a quicker cut off than a single eccentric would do.

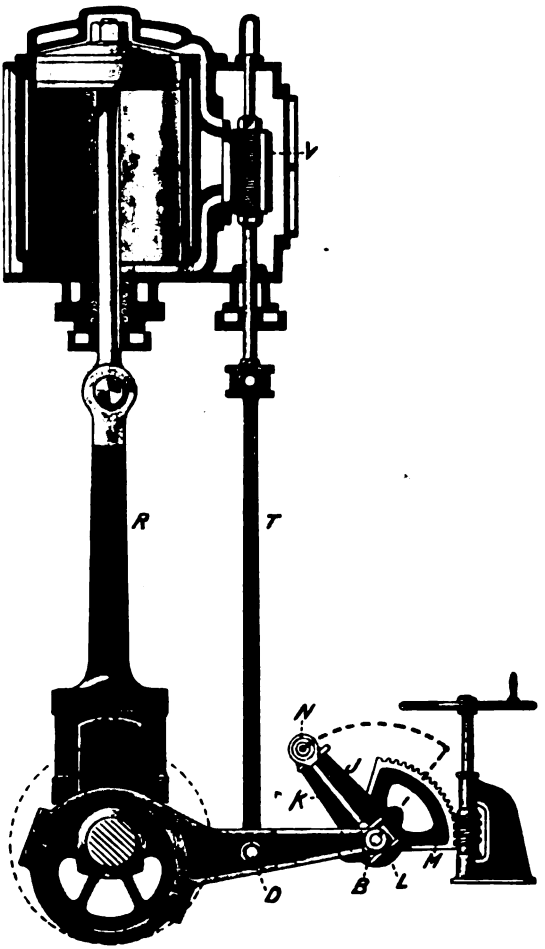

FIG. 124.—MARSHALL.

It will be found that in the very largest marine engines we seldom desire to cut off at even so little as one-third of the stroke, and so the common slide valve and the above kinds of valve motion are to be found in these large engines. Cutting off at one third of the stroke in each cylinder of a triple cylinder engine is like cutting off at $\frac{1}{2}\frac{1}{7}$th of the stroke in a single cylinder.

89. When we look at a large triple cylinder engine for the first time, we are confused at the apparent **complexity of its con-**

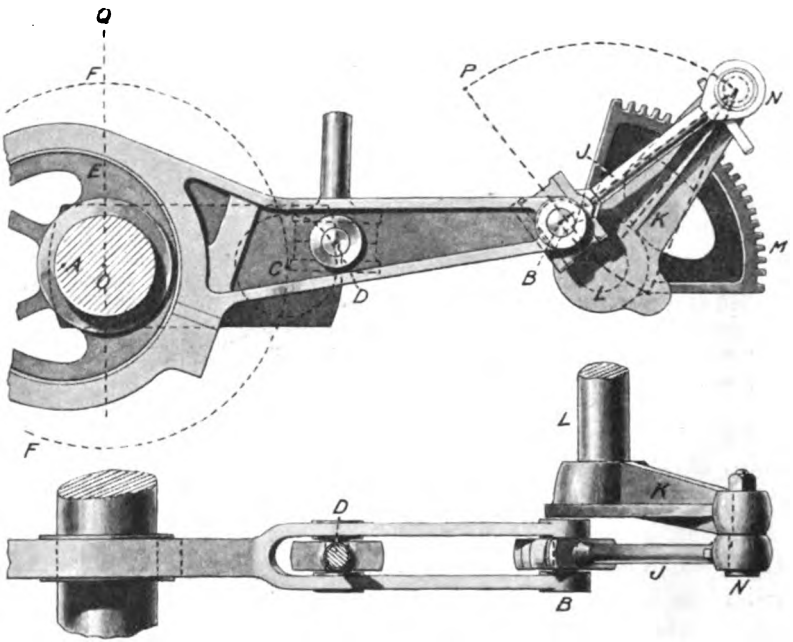

FIG. 125.—MARSHALL.

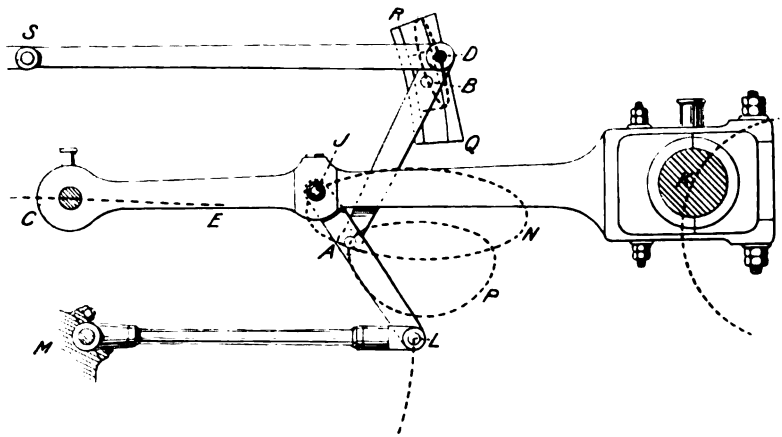

FIG. 126.—JOY.

struction. When, however, we consider it carefully, we see that it is simple enough. Thus, for example, look at the great valve *V*,

Fig. 129, of the low pressure cylinder; it is very heavy, and to take its weight off the valve rod, the rod is extended above, so that the **balance piston** *P* may, because of the steam pressure upon it, support the weight not only of the valve and rod, but some of the link motion.

Again, the valve *V* is so large that the steam pressure on its back would press its face so tightly against the seat on which it

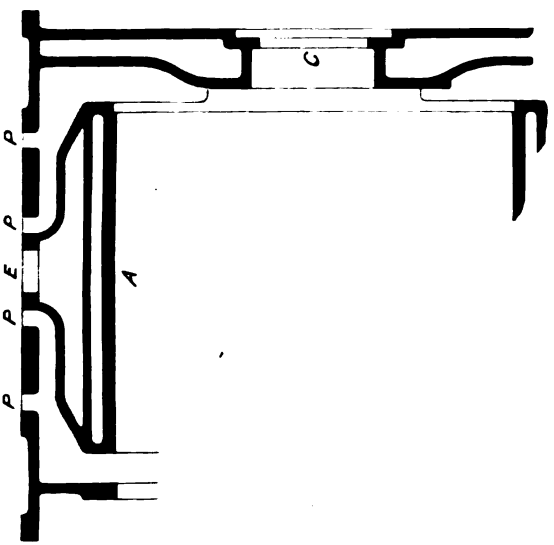

FIG. 127.—LOW PRESSURE CYLINDER.
Showing positions of steam ports P, exhaust port E, and steam jackets for double-ported valve.

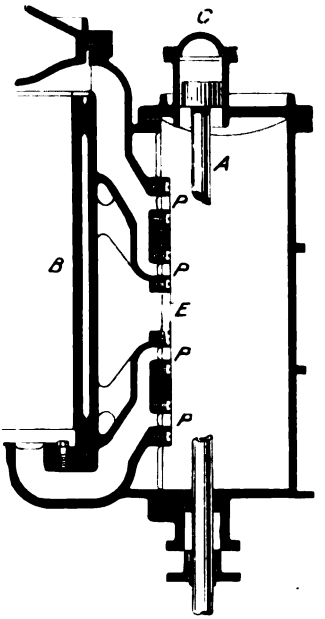

FIG. 128.
Showing valve chest, steel liner for valve seat, balance piston, &c., for a double-ported valve.

slides, that there would be excessive friction, consequently the **relief frame** *R* is applied, which prevents pressure steam from getting on a large part of the back of the valve. Fig. 130 will show more clearly how the ring *R* of the relief frame slides steam tight on the back of the valve. The space at the back communicates with the exhaust, and a pressure gauge is often provided for testing the packing of the ring.

But again, the large valve *V* is apparently complicated in another way. In truth it is only complicated by **its parts being doubled.** The space marked *E* is exhaust, that marked *S* is steam. In Fig. 131 the valve is at its mid position. Let us think of one

end of the cylinder only and the left-hand side of the valve. Note that the passage *P* has two openings into it instead of merely one, and that whatever is occurring at one of them is occurring in exactly the same way at the other. If a student will make a model like Fig. 131 of paper, and move it on its valve seat, he will see at once that this is the ordinary locomotive slide valve whose parts we have doubled. He can easily imagine a treble-ported valve.

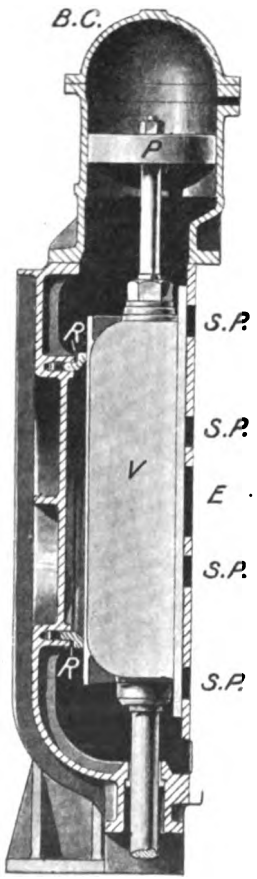

Fig. 129.

Fig. 130.
Two-ported valve with relief frame R, and balance piston P.

It is quite evident that there is less travel with these valves, giving large openings to steam and exhaust; the frictional work saved in this way is of some importance, because, in spite of relief frames we always must have much loss by friction. **The trick valve** of Fig. 132 serves the same purpose. The student will notice that when the edge uncovers the port, there is steam entering the same port through the hollow part from the steam space on the other side. This valve must have a raised seat. It would be interesting to know what percentage of my readers will make working models in paper of Figs. 131 and 132.

Fig. 134 shows **a piston valve** used when there are highest pressures. This is merely an ordinary slide valve, only that, instead of having a flat face we have a cylindrical face, and pressures are very well balanced. The pistons *R* and *B* are packed with rings as ordinary pistons are packed to make them steam tight. The port openings extend all round the pistons except that there are bars across to prevent the packing rings springing out. Another is shown in the Willans engine (Fig 233.).

Sometimes the steam space is at the two ends, the exhaust being between the pistons, surrounding the connecting tube; sometimes the reverse arrangement is adopted, as in Fig. 134. A slight

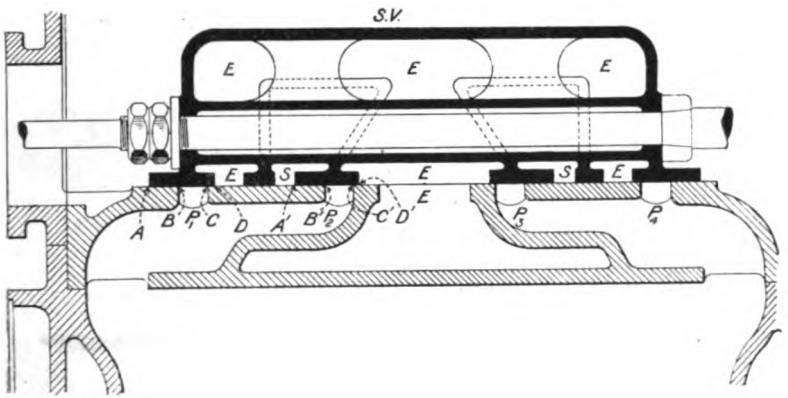

FIG. 131.—DOUBLE-PORTED VALVE IN MID POSITION.

$A B = A' B'$ = outside lap; $C D = C' D'$ = inside lap. The part $A' B' C' D'$ is an exact copy of $A B C D$. The space S is really outside the valve, and is filled with steam. The space E is all exhaust. Whatever occurs at the port P_1 occurs at the same time at the port P_2.

difference in size of the two pistons allows us to dispense with a balance piston.

90. Sometimes **momentum cylinders,** or cushions, are fitted in quick-running engines to supply the forces due to mere inertia of the valve gear. In **Joy's Assistant Cylinder,** instead of the ordinary balance piston we have a piston which is forced by steam in the direction in which the valve is moving,

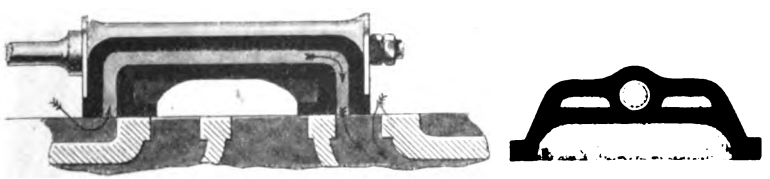

FIG. 132.—TRICK VALVE.

so that the eccentric rods are greatly relieved; there is also the necessary cushioning action at the end of its stroke. In existing marine engines these Joy Assistants may exercise as much as 20 horse-power.

A practical man who understands his engine will not need any hints as to the **setting of valves.** Indeed this merely means that when each crank is at its dead points its valve shall just have the proper amount of lead; not quite the same perhaps for both ends; and this is effected by the nuts on the valve

rods. If the leads at *both* ends have to be increased or diminished, the *advance* of the eccentric must be altered. The position of the valve at mid travel is exactly midway between its position at the dead points (see 1 and 8, Fig. 20),

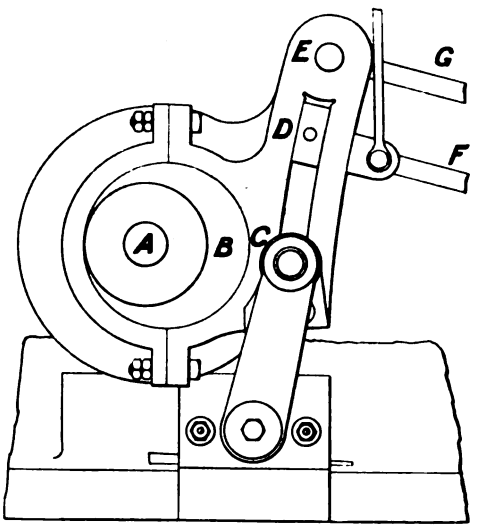

FIG. 133.—THE FINK SLIDE VALVE GEAR.

This is the simplest of valve gears. The valve is worked from the block D by the radius rod F. D may be lifted or lowered in the link slot to reverse or to give different grades of expansion. The link is rigidly part of the eccentric straps, the centre of whose disc B is 180° from the main crank. The point C of the link or eccentric straps is guided to move nearly horizontally in the arc of a circle.

The result is much the same as is obtained by the use of a Gooch link or by Radial valve gear, only that the octaves in the motion (Art. 315) are much more pronounced.

In the figure a pin at E works another slider through the rod G. When this gear is used for reversal, C is a point in the line joining A, and the centre of the slot.

and this ought to be symmetrical over the exhaust port. It is to be remembered however that, especially in marine engines, there is more lead and more inside lap at the lower port. There is another reason for greater lead at the lower port ; it enables the wear of the eccentric straps to be taken up.

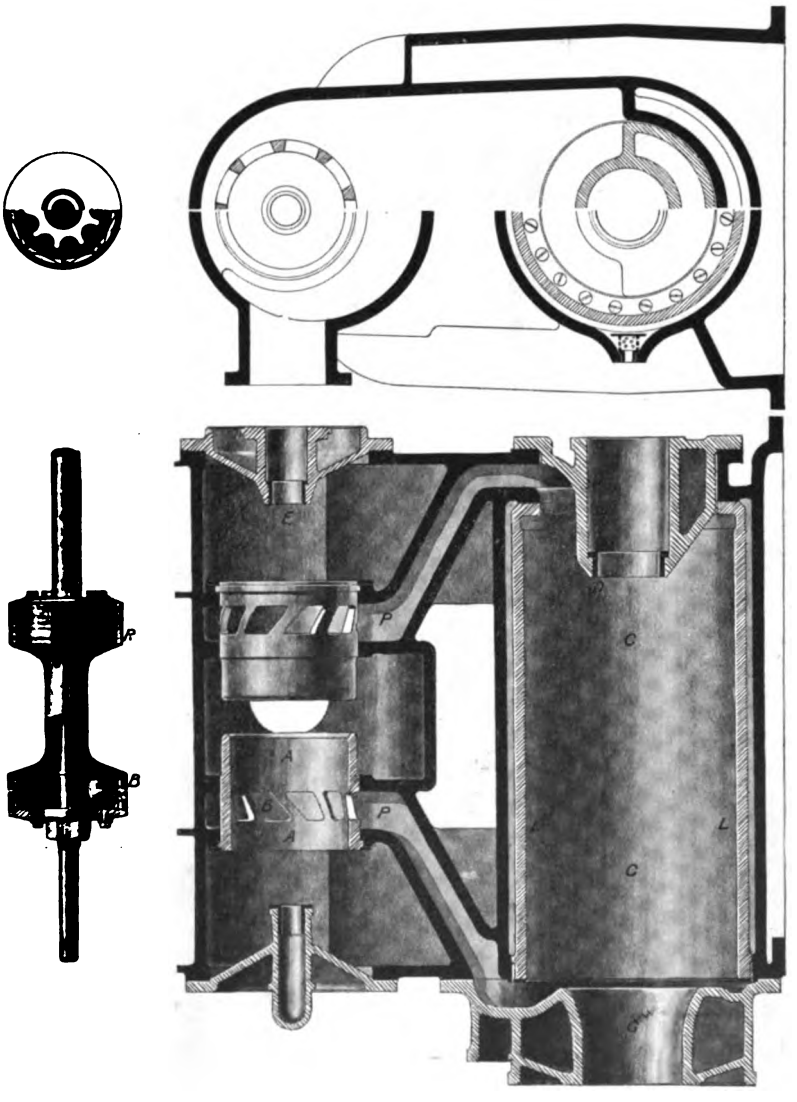

FIG. 134.—TRIPLE EXPANSION MARINE ENGINE PISTON VALVE, VALVE SEATS, CHEST AND JACKETED HIGH PRESSURE CYLINDER.

Usual position upside-down. Exhaust spaces at ends of piston valve; steam space in middle.

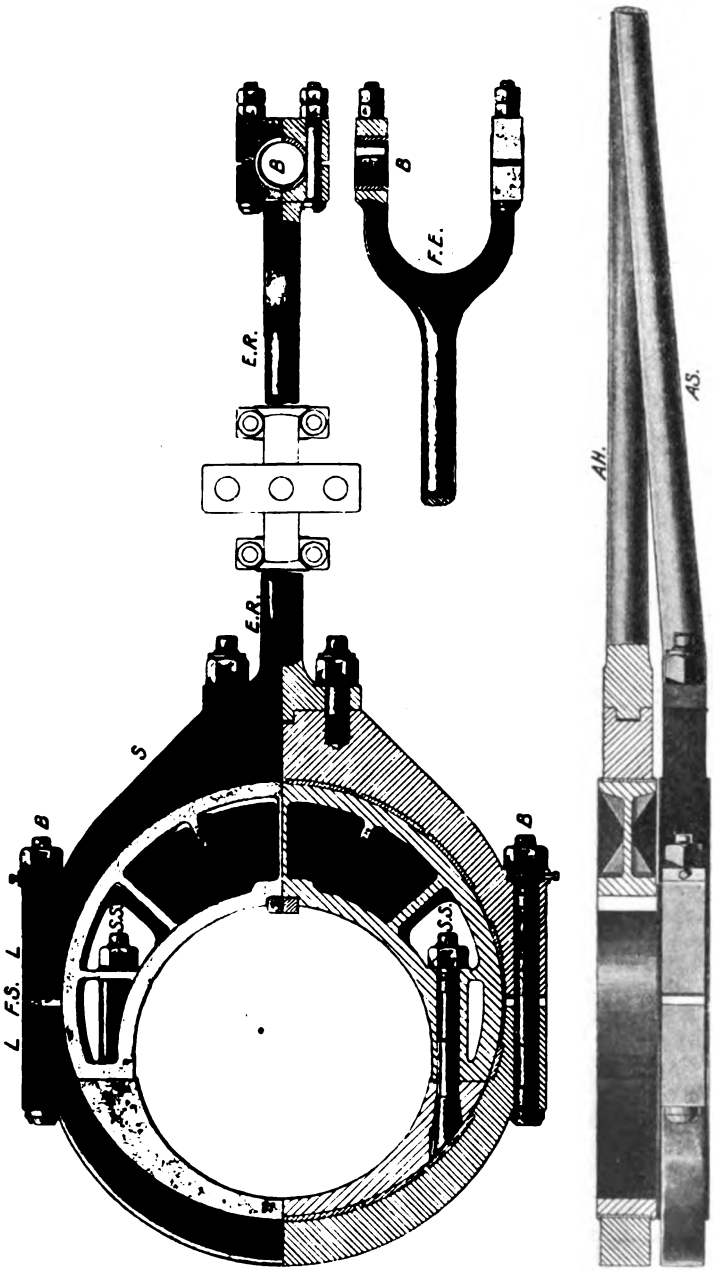

FIG. 135.—AHEAD AND ASTERN ECCENTRICS FOR LINK MOTION OF A MARINE ENGINE.
Cast iron sheave in two parts, bolted together with steel eccentric strops L S, lined with white metal. Rod E R with T piece fastened by studs.

CHAPTER IX.

THE EXHAUST AND FEED.

91. WHEN steam escapes from a cylinder, it may escape to the atmosphere, and the engine is said to be **non-condensing.** Sometimes the steam escapes through a pipe in the chimney, so that it may create a draught through the flues of the boiler. This is the case in locomotive engines which are always non-condensing. Sometimes the pipes through which the escaping steam passes are surrounded by the *feed-water*, which thus gets heated before it enters the boiler. Sometimes the feed-water supply enters a box in spray, being pumped off from the lower part of the box. The exhaust steam passes through this box also on its way to the atmosphere. The main objection to this plan is that the feed-water is heated before passing through the pump, and this gives trouble. Also the water takes up objectionable oil from the steam. Weir heats the feed-water by mixing with steam from the lowest pressure receiver of a triple expansion engine. Boiler steam is sometimes used to heat the feed-water, and the increased efficiency discovered is really due to the fact that the method used greatly increases the water circulation. (See Chap. XXXIII.) There can be no doubt of the great benefit derived from heating feed-water in feed-water heaters by the heat in the flues before it enters the boiler, partly because rushes of cold water produce great local strains in the shell and flues, and this is thought to be very important; but as a matter of fact there is usually found to be a saving of something like 10 per cent. in fuel, on the whole. Again, the heated feed-water tends to deposit its sediment in the heater rather than in the boiler itself, and besides, its air gets greatly driven out of it. The air is, however, only objectionable in condensing engines.

The name *Feed-Water Economiser* is more usually given to a number of tubes surrounded by the waste gases which are about to escape up the chimney. They have to be constantly kept cleaned

from soot by means of scrapers. One seldom sees a group of four or five Lancashire boilers without a feed-water heater, and it is commonly said that the feed-water heater is practically equivalent to an extra boiler in steam produced, without extra fuel being needed, (see Fig. 196).

92. In a **condensing engine** the exhaust steam passes into a cold chamber called a condenser. This chamber, which may be of any shape, is kept cold sometimes by cold water circulating round it, and is then called a **surface condenser;** sometimes by jets of cold water spraying from a rose-head, inside the condenser on the end of a pipe, the other end of which dips into a neighbouring pond or tank; then it is called a **jet condenser.** It is to be remembered that the weight of cold water needed for condensation is usually taken to be about thirty times the weight of steam to be condensed. Less will do; but in any case the amount of water needed is so great that we never dream of using a condensing engine if the water must be supplied by a water company and has to be paid for.

EXERCISE. 1 lb. of steam at 3·62 lbs. per square inch or 65° C. is condensed by water at 15° C., the mixture being 40° C., what weight of water is used?

In the table of Art. 180 we see that the latent heat of the steam is 561, and the steam not only condenses, but falls 25°, so that altogether the pound of steam loses 561 + 25, or 586 units of heat. The water is raised 25°, and hence its weight is 586 ÷ 25, or 23 lbs.

It is of importance that a student should be able to calculate: 1. How much heat must be given to feed-water in the boiler to produce steam. 2. How much heat goes away from the cylinder in the steam, whether the engine is condensing or non-condensing.

To raise 1 lb. of water to any temperature requires (with enough accuracy for our calculations) 1 unit of heat for every degree. Thus to raise a pound of water from 0° C. to θ° C. needs θ units of heat. To convert the water into steam at θ° C, without any further increase of temperature, needs $l = 606{\cdot}5 - 0{\cdot}695\theta$ units of heat. This last is called the latent heat of the steam; it was measured by Regnault, and he found this formula to represent his results pretty accurately. A table of values of l is given in Art. 180. Let a student consider steam at 101·9 lbs. per square inch. Its temperature is 165° C. Suppose that a pound of feed-water was at 40° C., it took 125 units of heat in rising to 165° C., and it then took 606·5 − 0·695 × 165 or 492 units of heat to convert it into steam. Altogether it was given 125 + 492, or 617 units of heat in the boiler. Let us suppose that a pound of steam escapes from the cylinder at 17·53 lbs. per square inch, or (according to the table,

page 320) at 105° C., its latent heat is 534 units, and if we imagine it cooled to the temperature of the feed-water, this means 105 − 40, or 65 more units. It therefore would carry off with it 599 units of heat. In a condensing engine if we imagine 1 lb. of steam at say 65° C. converted into water at the temperature of the feed-water (40° C.), we find that it must have 581 units of heat taken from it. Now, I do not say that for every pound of steam produced, we have a pound of steam in the exhaust, because some of the exhaust stuff is water—but the above figures will teach an important lesson, important in all heat engine work, namely, that we take away and waste in the exhaust nearly as much heat as we give to the stuff, so that only a small portion is utilised and converted into useful work.

Having to take away by means of cooling water this great amount of heat from the exhaust steam is a great trouble. It is so great a trouble that we would fain use non-condensing engines on board ship. Why do we not, then? Because, if we let all our steam go off uncondensed to the atmosphere, where shall we get feed-water for our boilers? From the sea; sea water, which deposits salt inside the boiler, even if we are continually trying to avoid it by blowing off. It is, however, the very hard, tight-sticking **deposit** from sulphate of lime which we fear most. This is so insoluble in hot water that it is impossible to use sea water in boilers with pressures higher than about 55 lbs. per square inch (absolute). And this also is the reason why we must use surface condensers. But on land when we can get a sufficient supply of fresh water for the feed, if there is a steady load on the engine, and we use high pressures, there is often found to be no great advantage in having a condensing rather than a non-condensing engine. If, however, the load varies greatly, there is considerable saving in using a condensing engine if we do not have to pay for the condensing water.

Calculations like the above have to be made continually in practical work, and the student ought not only to work numerical exercises, but he ought to make measurements for himself in a heat laboratory. Even one actual measurement of the latent heat in a quantity of steam will give ideas which no practical man ought to be without. It is quite absurd to think that a man who has only this kind of knowledge by hearsay, really comprehends what he talks about. What we continually need to remember is Regnault's total heat H, the heat given to a pound of water at 0° C. to convert it into steam at θ° C., and its amount is $H = 606{\cdot}5 + 0{\cdot}305\theta$. θ units of this is spent in merely heating it as water, and $H - \theta$ or $606{\cdot}5 - 0{\cdot}695\,\theta$ is the latent heat. Notice that there is less latent

heat in high pressure steam than in low pressure, although there is more total heat.

If students do exercises, they ought to take cases such as that of say one-quarter of a pound of water, and three-quarters of a pound of steam—how much heat has produced it? how much heat will it give out in the condenser?

The following method of calculation is very much more suggestive and accurate than the last, and the student ought to work at least one exercise very carefully.

EXERCISE. An engine uses 17 lbs. of dry saturated steam at 101·9 lbs. per square inch (absolute) per hour per indicated horse-power. How much heat enters the condenser with the exhaust steam per hour per horse-power? Assume no radiated heat, no leakage of steam, no steam jacket.

The total heat in 17 lbs. of such steam may be calculated, or from the table Art. 180 we see that the heat supplied is 17 × 656·8, or 11,166 Centigrade units. Now 1 horse-power hour is 1,980,000 foot-pounds, or (dividing by 1393, Joule's equivalent) 1422 Centigrade units. Hence 11,166 − 1422 or 9744 units reach the condenser per indicated horse-power hour.

93. An injection condenser may be of any shape; the injection water rushes in as spray, and with the condensed steam and air it is drawn out through a foot valve *F V* in Fig. 136, which shows an **air pump.** Fig. 47 shows how it is worked in marine engines. In the down stroke of the bucket the water passes through the bucket valves *B V*; in its up stroke this water is lifted and passes through the delivery valve *D V* to the hot well. Notice that many light valves are often used in air pumps instead of one large one; this is for quickness, and also that they may lift under very small pressures. Valves are often made of thin sheet brass or phosphor bronze instead of india-rubber. The barrel and bucket are castings, usually in gun metal. The force pump, Fig. 140, feeds the boiler; when the plunger *A* is lifted, water is sucked from the hot well through the valves *G F E* to the barrel of the pump; when the plunger is pushed down, the water in the barrel is forced through other valves to the boiler. The feed pump is usually so large that it would supply more feed-water than the boiler needs.

Intermittent feeding is bad for many reasons; the feed-water ought to be supplied regularly. A good engine-driver will leave the water at a high level in his boiler when he stops his engine for a time. Sometimes, however, when he wants to start, the water may be too low, and it is important to be able to feed the boiler without starting the main engine. This gives us also a reason why a high tank of water is so useful, as we may easily fill the boiler from it. It is usual to have means of independent feeding in all large engines, so that it may go on when the engine is stopped. If injectors (Art. 95) only are used, they ought to be in duplicate. If

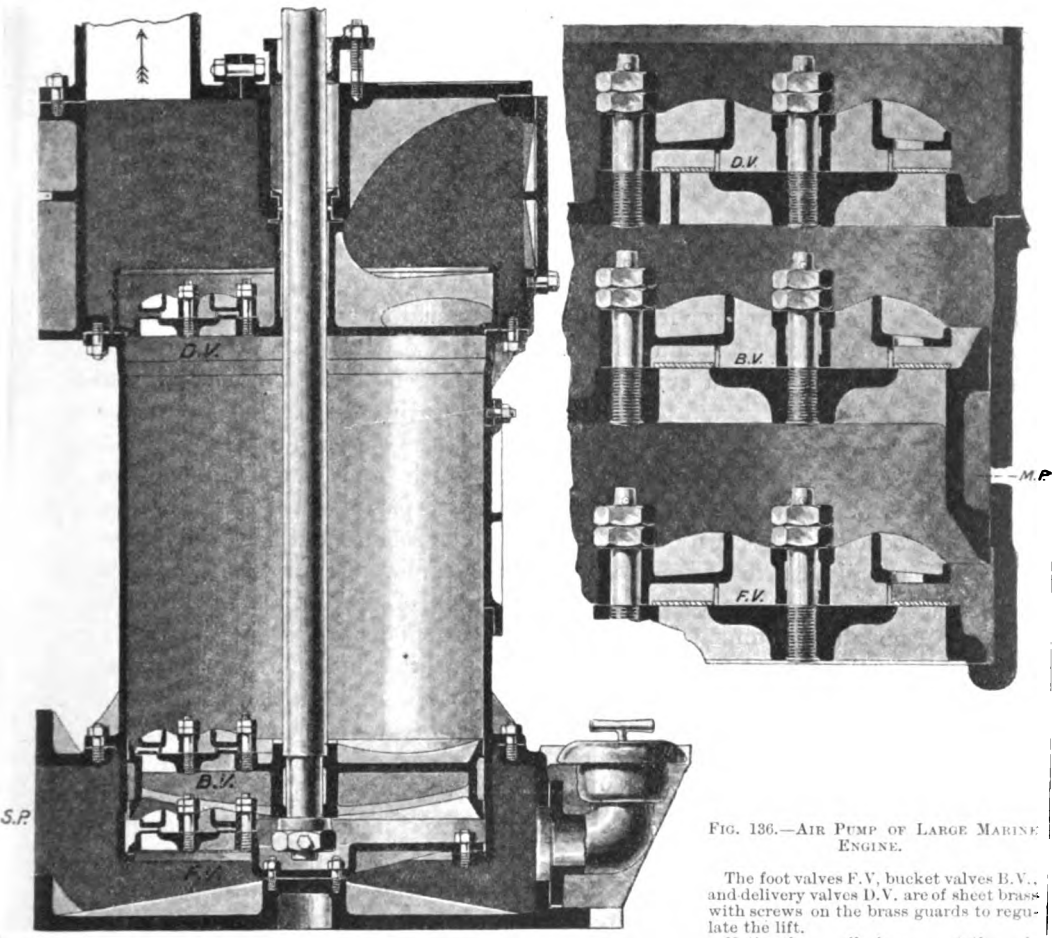

FIG. 136.—AIR PUMP OF LARGE MARINE ENGINE.

The foot valves F.V, bucket valves B.V., and delivery valves D.V. are of sheet brass with screws on the brass guards to regulate the lift.

Notice the small clearance at the ends of the stroke of the bucket; this and the lightness of the valves conduce to the better exhaustion of air. The presence of even the slightest trace of air seems to greatly diminish the efficiency of a surface condenser.

Notice the door on the barrel of the pump; it allows the valves to be examined.

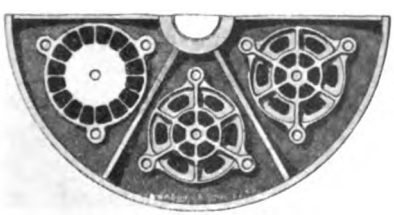

an independent steam pump or other separate boiler feeder be employed, it is usual to order it large enough to supply much more, say twice or three times the actual feed-water; this is done with the object of letting it work slowly so that it may wear well and need little attention. The Worthington **steam pump** (Fig. 21*a*) is usually employed because it gives no trouble and is of easy regulation. In ships there is one main pump in each engine room capable of supplying all the boilers, and there is one **auxiliary pump** in each boiler room delivering only to specified boilers, and with suction from either the feed tanks or the reserve tank or the sea.

If the injection water is dirty we must be careful to strain it, and if we have a purer fresh supply it is usual to use it in preference to the condensed steam as feed-water. We often use a fresh supply when we have a surface condenser, as condensed steam is sure to have oil in it, and the oil does harm to the boiler. Oil sometimes seems to get on the tubes or flues of the boiler in places, preventing the water touching the metal which may get extremely hot at such places. I have sometimes seen places in the crown or just beyond the crown of the furnace which seemed red hot, and I have usually attributed them to patches of oil. **Oil filters** are used in marine engines to free the feed-water of oil, and almost no oil is now being admitted to valve chests or cylinders for lubrication.

A **surface condenser** (see Fig. 138) is usually formed of a great number of $\frac{3}{4}$ or $\frac{5}{8}$-inch drawn brass tubes, $\frac{1}{20}$ inch thick, about 1 inch apart, of zig-zagged arrangement in a brass casing *C C*, and through them cold water is kept circulating as shown by the arrows *C W T* to *C W T* through *C W* (in amount about 70 times that of the feed-water), by means of what is called the circulating pump, which is usually a centrifugal pump. In a marine engine it is the sea water which is kept so circulating, and there is usually an arrangement by which this circulating pump may draw water from the bilge instead of the sea. Driven by the main engines there are also usually bilge pumps; there are then often four pumps forming part of the main engine—air, feed, circulating, and bilge. Fig. 139 shows an independent circulating pump.

The tubes are always kept cold, and the exhaust steam being admitted at *A* into a closed space outside and all round these tubes, is condensed and is drawn away through *B* by the air-pump. The condensed water is the **feed-water,** and needs only an occasional small addition of (fresh, not salt) water, because of leakage and blowing off. Thus the same water is used over and over again, and an engineer need not have more variation of level than an inch in his boiler. Just at the beginning it is thought well

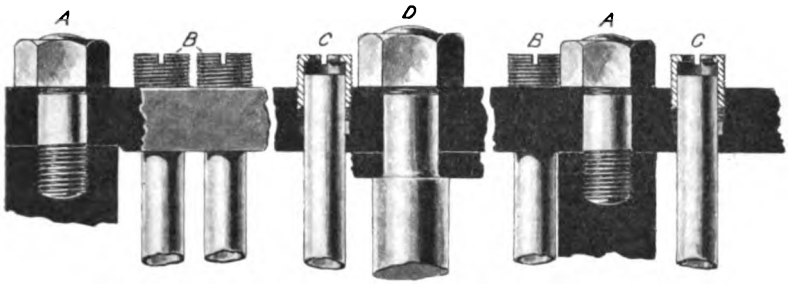

FIG. 137.—Showing screwed stuffing box ends of condenser tubes to allow expansion, without leakage of sea-water into the condenser ; also stays and fastenings for tube plates.

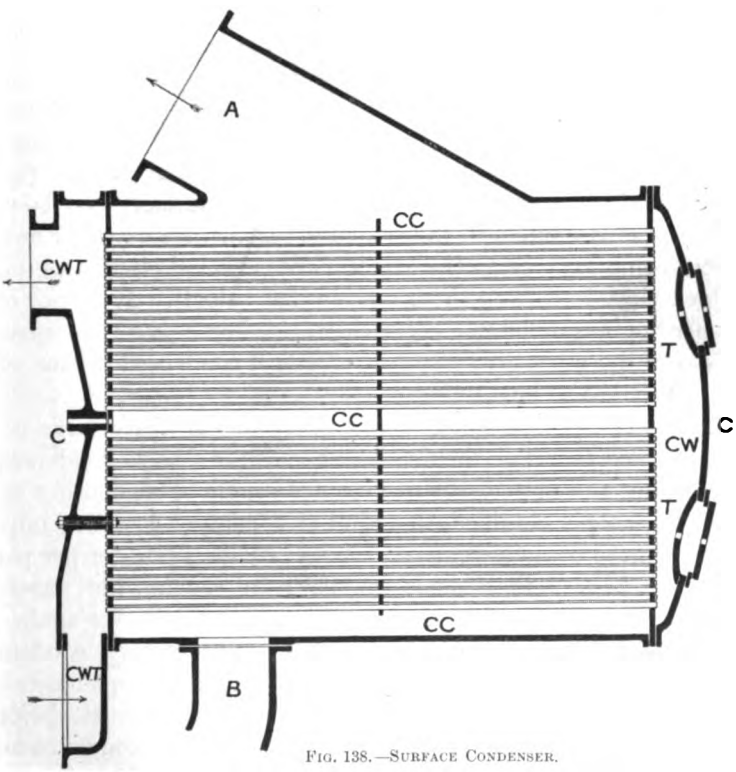

FIG. 138.—SURFACE CONDENSER.

Brass casing generally cylindric in shape ; 8 to 15 feet long. Tube plates T, 1 inch thick. Usually water inside the tubes and steam outside. There are two advantages in having the steam inside the tubes : the deposited grease is more easily removed, and the room keeps cool. The disadvantage is the greater weight of water, more joints to leak ; more tendency to corrosion.

The tube plates are stayed, and the tubes when long have a mid support as shown.

We have every reason to believe that if condenser tubes were made very much smaller than at present the whole condenser might be much smaller in size.

to use salt water for a short time, as this produces a thin scale all over the inside of the boiler which is thought to protect the plates against *pitting*.

EXERCISE. In recent practice one square foot of tube condenses about 12 lbs. of steam per hour (sometimes a higher figure is taken). Find the total length of $\frac{3}{4}$-inch tube required for an engine whose maximum indicated power is 1,000 horse, using 16 lbs. of steam per hour per indicated horse-power.

The total area is 16,000 ÷ 12 or 1,333 square feet. One foot of $\frac{3}{4}$-inch tube has a surface $\pi \times \frac{3}{4} \times 12$ square inches or $\pi \times \frac{3}{4} \div 12$ or 0·196 square feet. Hence 1,333÷0·196 or 6,800 feet length of piping is required. If each length of tube is 8 feet, we need 850 lengths.

It is usually thought well to employ as large an air pump with a surface condenser as with an injection condenser, although there is much less water to remove. This is on account of the air which is always present in water to some extent, and from which the condenser must be kept free. Not only does such air spoil the vacuum, but the merest trace of air very materially retards the condensation of the steam.

94. When water is expensive, as in a town, that kind of surface condenser which is called an **evaporative condenser,** may be used. It consists of a number of tubes for the exhaust steam, their outside surfaces being exposed to the atmosphere ; a small circulating pump being employed to keep them wet on the outside. It is not often used for engines indicating more than 100 horse-power, because the outsides of the pipes give off white clouds of condensed vapour which may be thought to be a nuisance.

In electric lighting stations and other places where large power is needed, and therefore the increased economy due to condensation is important, and in places where a large supply of condensing water cannot be cheaply obtained, this kind of condenser becomes important. Ordinary surface condensers need 70 lbs. of water per pound of steam. Where there is large space for cooling, the water for an ordinary surface condenser may be used over and over again, but such space is expensive in cities. Now, evaporative condensers giving 24″ to 26″ of vacuum need water supply in amount only about $\frac{3}{4}$ of the weight of steam condensed. The surface must obviously be larger than in an ordinary surface condenser. Care must be taken that the condensing water trickles from the hotter to the colder parts. Leakage must be carefully prevented, and so joints must be good and accessible, and for another reason they must be accessible because the trickling water deposits from 10 to 40 oz. of solid matter per square foot per annum and the pipes must be cleaned. Horizontal tubes are found to be more effective than vertical, but

they take up more space. Various contrivances have been invented to cause a fairly even supply of trickling water everywhere. Artificial

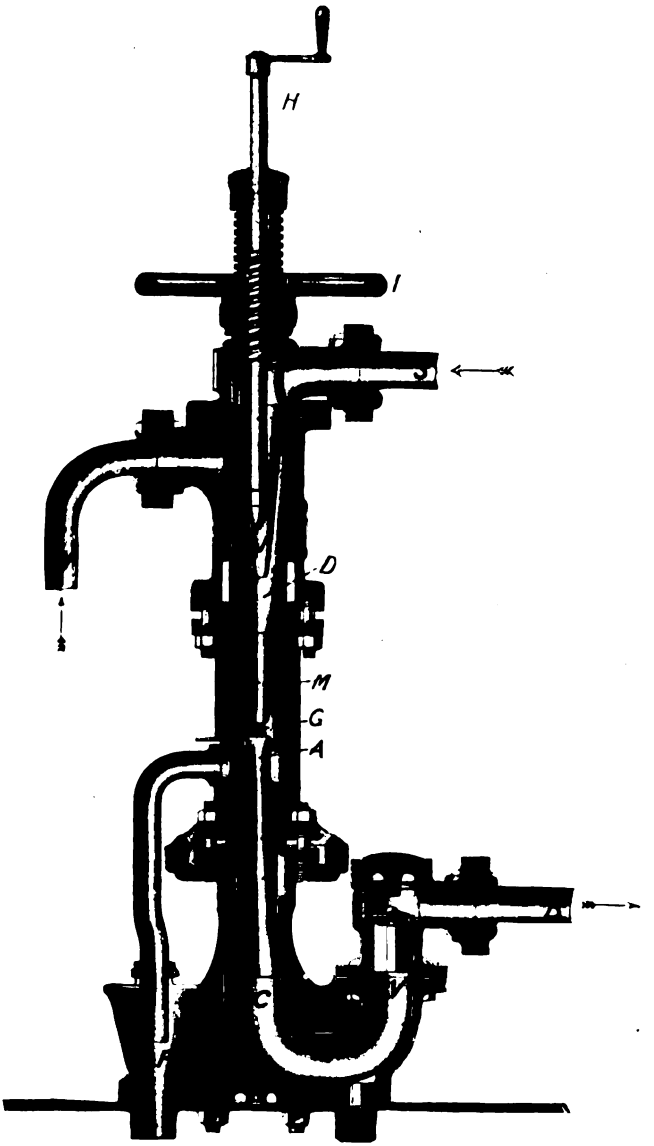

FIG. 138a.—THE INJECTOR.

fan ventilation is found to greatly (50 per cent. or more) increase the cooling effects. Sometimes the fan is only used when the heavy loads are on.

A **jet condenser** is like an injector. A central jet of injection water is surrounded by a nozzle for exhaust steam, and the receiving pipe gradually expands towards the hot well. The steam condenses and passes with the injection water to the hot well, no air pump being needed.

95. The Injector.—Steam from a boiler enters the injector at *S*, Fig. 138 *a*, and as it enters a place of low pressure at the end of the nozzle, it acquires a velocity which may be greater than 1,300 feet per second. There is a partial vacuum at *D*, and water flows towards it from a tank through *W*. Imagine the space *D* filled with water; the steam mingles with this water, condensing and heating the water, and the mingled stream passes across the place of low pressure *G* into *A* with a sufficiently great momentum to overcome the pressure of the boiler, which it enters past a check valve *V* and an ordinary controlled valve as well.

The tank may be below, or on the level of, or above the injector.

As the steam handle is gradually turned first a small quantity of steam enters from *S* driving air before it, creating a partial vacuum at *D*, filling the spaces with water, and the condensed steam water and air escape by the overflow to *O F*. The valve admitting water through *W* is now opened. As the steam valve is more opened a greater rush of steam takes place, and the water has enough momentum to open the valve and enter the boiler; there is now a partial vacuum in the chamber *G*, and hence it is thought good to have a valve in the overflow pipe to prevent air entering with water into the boiler; water can always escape through *O F*. If the engine is non-condensing I approve of allowing air to enter the boiler, as it prevents condensation in the engine cylinder, but it produces very bad effects in the condenser of a condensing engine. It is evident from the figure that we can control the flow of steam and water; when we diminish the water supply it is fed into the boiler at a higher temperature, and if this is too high the water may boil near *M* and the action be spoilt. As the lift from the tank is greater, there is more chance of trouble, and it is seldom that the lift is more than 20 feet. There are various arrangements in use for automatically adjusting the proportion of the water and steam areas at the nozzles to suit changing boiler pressures.

We shall see in Art. 381 that, as the velocity with which the water reaches *M* is greater, the efficiency is greatly increased. Now, coming from a tank on the level of or below the injector, it is not possible for the water to have a great velocity. Hence there are injectors of double action. The water is first forced into a chamber, when its pressure is about 20 lbs. per square inch above

that of the atmosphere, and by a second jet of steam it is then forced into the boiler. In the injector of the future this principle will probably be greatly amplified, for it is quite easy to have a central telescopic system of steam nozzles from which the steam emerges gradually, at first with the slowly moving and later with the more quickly moving water.

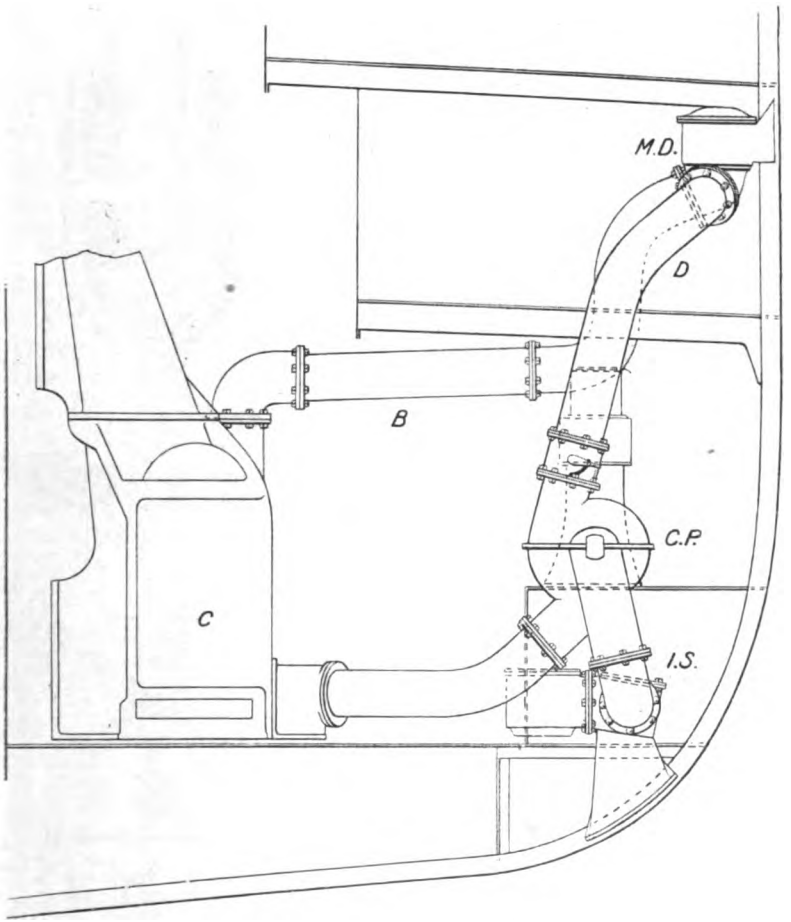

FIG. 139.—MARINE ENGINE CIRCULATING PUMP AND CONDENSER, &c.

This shows the gun metal circulating pump *C.P.* (usually there are two) driven by an independent engine, drawing sea-water through the inlet suction valve *I.S.*, driving it through the tubes of *C* the condenser, and by the discharge pipe *B*, through the main delivery valve *M.D.* into the sea again. Both *I.S.* and *M.D.* are screw-down stop valves worked by hand. In case of need *C.P.* will draw water from the bilge instead of the sea, and discharge directly through *D* instead of the condenser. In this case there is actual lift and it is found that twice the speed is needed to deliver about half as much water. Nevertheless the possible discharge is enormous; in some ships 1,000 to 1,500 tons of water per hour. The independent engine driving the pumps is placed well above the bilge, and takes steam either from the main boilers or auxiliary boilers, and exhausts either to main or auxiliary condensers, or is non-condensing.

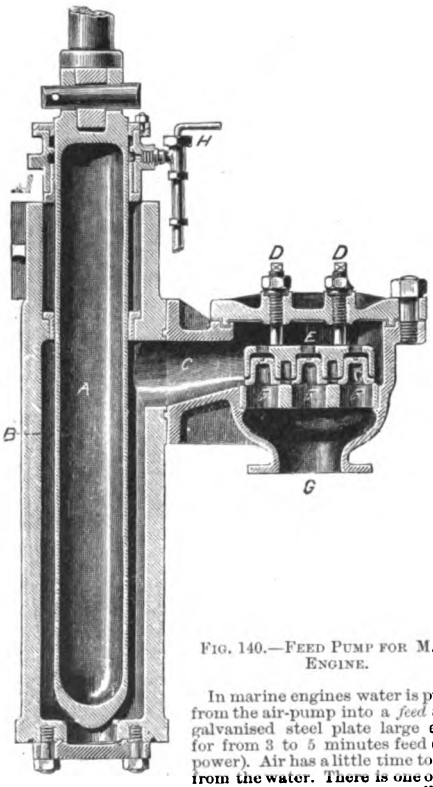

FIG. 140.—FEED PUMP FOR MARINE ENGINE.

In marine engines water is pumped from the air-pump into a *feed tank* of galvanised steel plate large enough for from 3 to 5 minutes feed (at full power). Air has a little time to escape from the water. There is one of these in each engine room, usually connected by a pipe to the other. There are two overflow pipes. One (to the reserve feed tank) is a syphon coming from the bottom of the tank, arranged so that it cannot act unless the surface level is high enough. The other takes oily water from the surface to the bilge, unless when a grease filter is fitted. The glasses showing the levels of water in the tanks must be visible from the starting platform. There are zinc slabs in the tanks. The double bottoms under engine and boiler rooms are used as reserve feed tanks (to make up losses by leaks, &c.), holding from 50 to 100 tons of water in large ships. These receive fresh water from distilling apparatus. Of late it has been the custom to discharge from the air-pump into a *hot-well* tank, and to pump the water from this through an oil filter into the feed tank.

Apparatus for distilling fresh from sea-water is to be found now on all ships. This supplies water for ordinary use, and also for waste of steam. There are many varieties, but they all use the principle of passing boiler steam through tubes to boil sea-water surrounding the tubes; the resulting steam is condensed. They differ from one another in the case with which the scale may be removed.

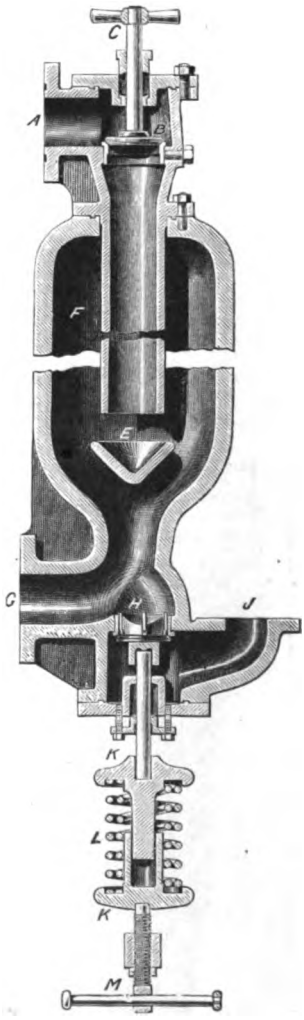

FIG. 141.—AIR VESSEL FOR FEED OF MARINE ENGINE.

The pump delivers the water through *G*, it travels upwards through the central tube and valve *B*, to the boilers through *A*. *F* contains air which being under pressure causes a more uniform flow of the water. When the connection between the air vessels and boilers is closed the water escapes by way of the valve *H*, through *J* to the hot well.

CHAPTER X.

FLY-WHEEL AND GOVERNOR.

96. It is really on the fly-wheel that we depend for the prevention of sudden changes in speed. The governor is too leisurely.

The mass of a fly-wheel is mainly in its rim, and it is usual to neglect the mass of the arms and boss in calculations. The weight of the fly-wheel in pounds divided by 32·2 gives the mass in engineers' units. Half the mass multiplied by the square of what we may call the average velocity of the rim in feet per second is the kinetic energy stored up in the wheel. If W is the weight of a fly-wheel in pounds, if R is the average radius of the rim in feet, when the wheel makes n revolutions per minute, it is easy to show that the energy stored up in it is $WR^2n^2/5874$ foot-pounds.

The following exercises will bring home to students the value of the fly-wheel:—

1. The rim of a cast iron fly-wheel has a rectangular section $12'' \times 10''$. Its average radius is 5 feet, what is its weight? Its volume is $12'' \times 10'' \times 2\pi \times 60$ or 45,200 cubic inches; its weight about 11,760 lbs. and

$$WR^2 \div 5874 = 50{\cdot}1.$$

If this wheel makes 100 revolutions per minute its kinetic energy is 501,000 foot-pounds. If it makes n revolutions per minute its kinetic energy is $50{\cdot}1 \times n^2$.

Hence, in changing from any speed to another, we can calculate the energy that it will store or unstore.

2. An engine with the above fly-wheel gives out on the average 120 horse-power at 100 revolutions per minute. Therefore the energy given out in one revolution is $120 \times 33{,}000 \div 100$ or 39,600 foot-pounds. Now let us suppose that the fly-wheel is called upon to store the whole of the energy which would be supplied in half a

revolution, because perhaps the governor is too sluggish, what is the highest speed?

The wheel had $50{\cdot}1 \times 100^2$ or 501,000 foot-pounds already; we give to it $39{,}600 \times 0{\cdot}5$ or 19,800 foot-pounds. So that its higher store is 520,800, and this is 50·1 times the square of the new speed. Divide therefore by 50·1 and extract the square root, and we find 104 revolutions per minute as the highest speed.

A large fly-wheel is usually built up of many pieces carefully fitted, keyed and bolted together; an example is given in Fig. 144, its rim arranged with grooves for rope-driving. It only differs in its rim from a common form, which is a spur-wheel which would drive a mortise wheel. In America, engineers often use a wrought iron fly-wheel which may be run at much higher speeds than a cast iron wheel. Sometimes the power is taken from the fly-wheel by a belt; but in England this is never done on large engines. The Americans are beginning to imitate the much superior English method of direct driving.

When an engine has to drive a single machine, such as a dynamo machine, it is now quite usual to couple the crank shaft directly unto the shaft of the dynamo; indeed engine and dynamo are placed on one bed, and the four sets of brasses are bored out at one time so that they may be exactly in line. When this can be done there is a very distinct saving in power.

97. Fig. 142 shows the modern form of the **Watt Governor, loaded** as it now usually is. $A\,B$ is kept rotating, being geared from the crank shaft. When the speed is steady, the centrifugal forces of the balls just balance their own weights and the great additional weight W, and the weights of any other parts of the gear. Should the speed increase, there is increased centrifugal force, the balls separate more and lift W. Fitting the neck at B there is a ring or pair of blocks on the fork of the lever $C\,D$, so that C is lifted and by means of the lever $C\,D$ and rods going to the throttle valve, the admission of steam to the engine is lessened. If the speed is lessened the balls come nearer, W falls and the admission of steam is increased. This governing of the engine by throttling the steam alters the diagram by altering the pressure of the steam entering the cylinder.

Sometimes instead of lifting a weight W, we compress a steel spiral spring placed between B and A. In this case we have a means of adjustment of the forces.

The **Hartnell Governor** is shown in Fig. 143. $A\,E\,F$ is a brass cap with two arms $E\,F$ carrying pins at $F\,F$. The spindle is

fastened to the cap at A and makes it rotate. The balls W are at the ends of the bell crank levers WFH. When the speed increases, the centrifugal force of the balls causes them to lift the sleeve against the downward push of the spiral spring S; the lifting of the sleeve throttles the steam or in some other way diminishes the work done by the steam in the cylinder. There is usually an adjustment of the force in the spring which is easily made if the top of the cap is removed. By means of this adjustment we can make the governor

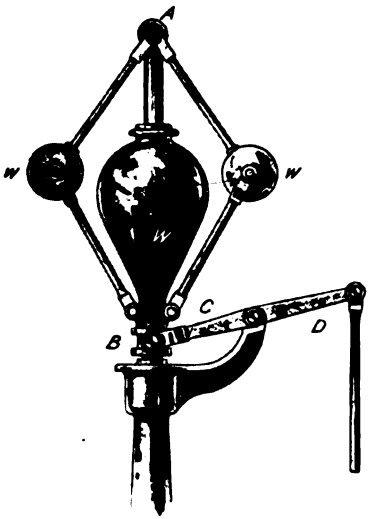

FIG. 142.—LOADED WATT GOVERNOR.

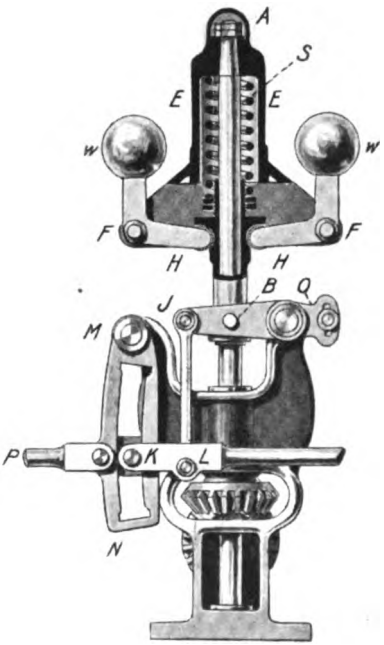

FIG. 143.—HARTWELL GOVERNOR, REGULATING THE CUT OFF.

very much more sensitive than that of Fig. 142. That is, suppose the normal speed of the engine to be 100 revolutions per minute; if the speed increases to $100\frac{1}{2}$, or diminishes to $99\frac{1}{2}$, we may find that the balls fly out very far or come in near one another very much.

When we try to make a governor too sensitive and quick we may cause the engine to *hunt*. That is, the balls may fly out so much for a very small increase in speed that steam is shut off too much; the speed decreases, the balls fly too near together and too much steam is admitted, and so the speed is continually fluctuating. This hunting action cannot be thoroughly understood unless one has

studied vibratory motion generally. Solid friction sometimes makes it worse ; fluid friction as of a dash pot greatly destroys it.

The governor can only produce effects during the admission of

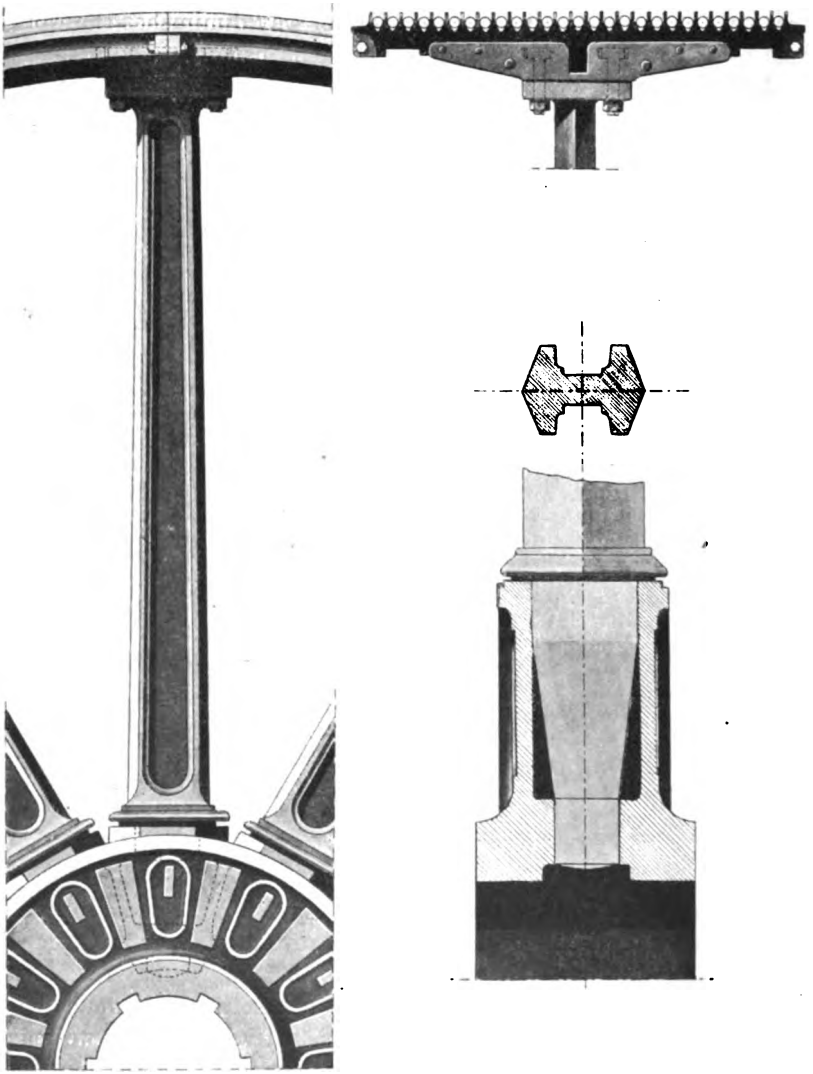

FIG. 144.—BUILT-UP FLY-WHEEL, RIM-GROOVED FOR ROPE GEARING.

steam to the cylinder; consequently for the prevention of rapid changes of speed we must depend upon the inertia of the fly-wheel.

98. To study any centrifugal governor, Figs. 142 or 143

for example, what we have to do is to find the equal forces F, Fig. 146, which (if the balls were not rotating) would just keep the balls in that particular position. We can calculate this (except what is due to friction) if we know the weights and shape of all the parts. It is an excellent exercise for students to find this force experimentally.

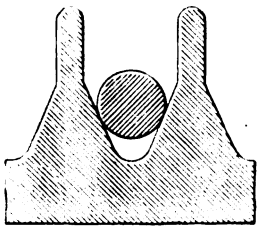

FIG. 145.—GROOVE FOR ROPE DRIVING.

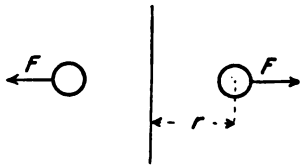

FIG. 146.

Thus in a particular governor the weight of each of whose balls was 6 lbs., the distance which I call r, Fig. 146, was carefully measured at the same time that the two equal forces F were exerted horizontally out from the axis by means of two spring balances. The first set of readings was taken when the balls were being overcome and were pulled out from the axis farther and farther; the second set when the balls were moving inwards and overcoming the spring balances.

	Values of r in feet.	Values of F in pounds experimentally found.	Speed at which the centrifugal force is just F.
balls pulled out	·3	54	297
	·4	73	299
	·5	96	306
balls going in	·5	92	300
	·4	70	293
	·3	52	291

It is essential that even a beginner should understand clearly that centrifugal forces must be just equal to the values of F when the balls are just going out or in for their various positions. The numbers in the third column are the speeds at which these centrifugal forces would be produced, and they are easily calculated.[1]

[1] It is easy to show that a body of w lb. making n revolutions per minute if its centre revolves in a circle of radius r feet, has a centrifugal force in pounds, of the amount $wrn^2 \div 2937$. Let the student take this up as an easy exercise. Hence if the centrifugal force is equal to F, $n = \sqrt{2936\,F/wr}$. In our case $w = 6$ lbs., and it

Observe the calculated speeds. We see that if the speed is 291 the balls will still tend to fall nearer even when r is so little as ·3; if the speed is 306 centrifugal force will just be able to cause the balls to move out beyond $r = ·5$. In fact, for all conditions of things for this range of motion, whether centrifugal force is being overcome or is overcoming, the limits of speed are 291 and 306.

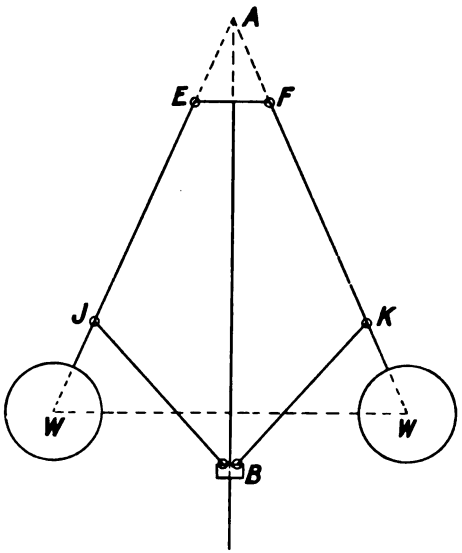

FIG. 147.

The experimental numbers are, however, a little misleading, because the friction of the mechanism is always very much less when the engine is running than what it is in such an experiment.

99. I have said that we can *calculate* such a set of numbers as are given in column 2, and therefore the speeds of column 3. Thus, for example, in the pendulum governor of Fig. 142, or let us take it as it often is, the two balls, Fig. 147, hung from pins at E and F and two arms JB and KB lifting the sleeve B. Now it is easy to show that in any case of this kind, if we neglect friction, the speed n at which everything is just in balance is inversely proportional to the square root of AH.

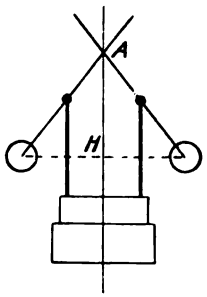

FIG. 148.—GOVERNOR WITH CROSSED RODS.

The point A is found by producing the arms WF and WE to meet the axis, and H is on the same level as the centres of the balls. But if the balls fly out a little, A falls and H rises, and hence for a double reason the distance AH diminishes. Hence for quite a small range of

is easy to see that $n = 22{\cdot}1\sqrt{F/r}$. This is the formula from which the speeds in column 3 have been calculated. It is to be noticed that if F and r are plotted on squared paper, any straight line drawn through the origin as it passes through points where F/r is constant will represent a particular speed. If the slope of the F,r curve is greater than that of a radial line there, it means stability.

motion there is considerable change of speed. It is much better to let E and F be close to the axis, or even to be in the axis as shown in Fig. 142. When a more sensitive governor is desired the arms are sometimes crossed as shown in Fig. 148. In this case when the balls go out, H rises but A rises also, and there may be as little change as we please in the speed, for quite different positions of the balls. Indeed, it is evident that we may go beyond the limit and have a governor the balls in which go further out as the speed is lessened.

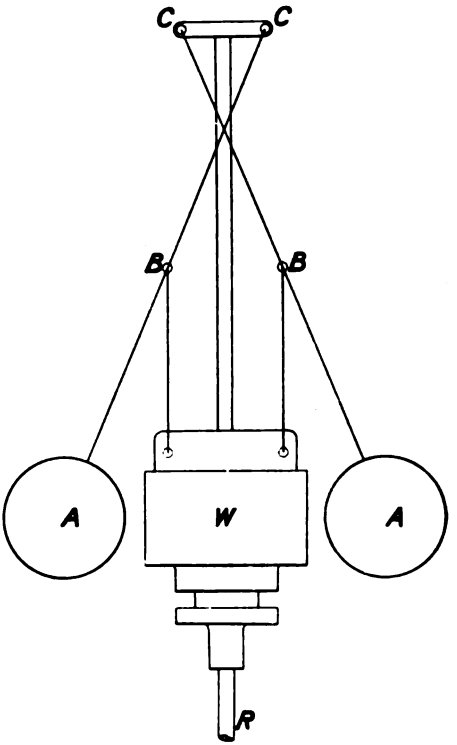

FIG. 149.—GOVERNOR WITH CROSSED RODS.

In the Watt or Pendulum Governor of Figs. 142 or 147, if there were no friction, there would be no virtue in the load W. W is useful because it is necessary with it to have the centrifugal and resisting forces ever so much greater, and therefore the forces of friction in the gear which must be moved, become quite inconsiderable in comparison. The weight therefore gives what we call *power to the governor.*

It is easy to show, as in the following exercises, that by adjusting the initial push in the spring of the Hartnell Governor, we can make it more or less nearly **isochronous** (all the speeds of the last column of the table, page 169, the same) or even unstable, and by increasing the stiffness of the spring we make it more **powerful.**

100. *Loaded Watt Governor.* EXERCISE. In Fig. 142 the pins above and below being supposed to be in the axis and the arms each of length l, the distance of each w from the axis being r; $W \pm f$ being the axial load, including much besides friction; it is easy to see that

$$F = (W + w \pm f) \frac{r}{\sqrt{l^2 - r^2}}$$

A student will find it very interesting to take numerical examples, plotting F and r and dealing with the curve or with the numbers as described above.

EXERCISE. Take $w = 3$ lbs., $f = 1$ lb., $l = 1$ foot, find the limiting speeds, if the limiting positions of the balls are $r = 0{\cdot}45$, $r = 0{\cdot}55$ feet. Let this be done when the loads W are 0, 10, 50 and 100 lbs. The answers are given in the table. I also give the fluctuation of speed which is the range of speed divided by the average speed.

Values of W.	0	10	50	100	Unloaded frictionless governor.
Highest speed . . .	68·45	128·1	251·7	349·2	59·30
Lowest speed . . .	46·82	114·8	238·7	334·4	57·35
Fractional fluctuation of speed	0·3753	0·1095	0·0530	0·0433	0·0334

As we see that $n = \frac{60}{2\pi}\sqrt{\frac{g}{h}}\sqrt{\frac{W + w \pm f}{w}}$ where h stands for $\sqrt{l^2 - r^2}$ we had better calculate the first part $\frac{60}{2\pi}\sqrt{\frac{g}{h}}$ at once; this gives evidently the limiting speeds for an unloaded frictionless governor, or 59·30 and 57·35 revolutions per minute; these multiplied by $\sqrt{\frac{W+4}{3}}$ and $\sqrt{\frac{W+2}{3}}$ give the limiting speeds of the loaded governor with friction.

EXERCISE. Prove that the constant load W on the Watt Governor is better than the load produced by a spring.

To do this it is only necessary to remember that with a spring, W will become greater as r increases; hence in calculating the numbers of such a table as the above, take W a certain amount too much for each of the higher speeds, this will evidently produce a greater fluctuation.

When the balls are connected with the weight in a *more complicated* fashion it is easy to arrange that the action is as if W diminished when r increases, and in this case it is easy to approach isochronism or even instability. There are several governors on this principle.

101. EXERCISE. Assuming for ease of calculation that in the *Hartnell Governor*, w (the whole mass may be supposed to be at w) moves out not in the arc of a circle, but horizontally, show that we can get any amount of power and sensitiveness, stability or instability.

It is evident that $F = a + br \pm f$ where the constant a depends upon the amount of tightening up of the spring and the weight of the gear; b is proportional to the stiffness of the spring, and f represents friction. Hence

$$n = \sqrt{\frac{2936}{w}\left(\frac{a \pm f}{r} + b\right)}$$

Take $w = 3$, $f = 1$, and find the greatest and least speeds if the greatest and least values of r are 0·45 and 0·55.

I take two cases, a stiff spring, $b = 200$, and a weak spring, $b = 10$; I take also various amounts of tightening up. Increasing a means increasing the initial compression of the spring. It will be noticed that if a is 0, it means

that the push on the stiff spring when in the innermost position of the balls, or $r = 0{\cdot}45$ is 90 lbs., and in the case of the weak spring 4·5 lbs.

Algebraically, neglecting friction, it is evident that

$$\frac{dn}{dr} = -\frac{1468\,a}{wn\,r^2}$$

so that for isochronism a must be 0, and for stability a must be negative. But when there is friction, such tables of numbers as these, easily worked out even by elementary students, ought to be studied—

For stiff Spring, $b = 200$.

Values of a . . .	20	1	−1	−2	−10	−20	−80
Highest speed . .	482·9	446·5	442·5	440·4	424·0	402·5	235·0
Lowest speed . .	487·0	442·5	437·5	435·0	414·6	387·4	139·9
Fractional fluctuation of speed .	−0·008 beyond stability	·0090	·0116	·0123	·0231	0·382	·507

For weak Spring, $b = 10$.

Values of a . .	3	2	1	−1	−2	−3
Highest speed . .	130·0	123·0	115·5	98·9	89·5	79·0
Lowest speed . .	118·9	109·4	98·9	73·8	57·1	33·0
Fractional fluctuation of speed .	·0892	·1170	·1584	·290	·443	·821

102. The static theory of governors which I have given must suffice for my readers for the present. A satisfactory general dynamic theory does not yet exist, although there are elaborate French and German treatises on the subject, and yet it seems to me that if a scientific engineer were to study the matter he would not find it difficult to create a satisfactory theory. It would deal with the solution of two differential equations.

1. The statement that (keeping to the letters of Art. 100) if t is time, and if $2w'/g$ is the whole effective inertia of balls and gear when the balls move out radially, and if $2c\dfrac{dr}{dt}$ is a fluid frictional resistance.

$$\frac{w}{g}\,r\,a^2 - F = \frac{w'}{g}\frac{d^2r}{dt^2} + c\frac{dr}{dt} \quad \ldots\ldots\ldots\ldots \quad (1)$$

2. At the angular velocity a suppose that there would just be equilibrium, if each ball were at the axial distance $r - x$, the actual distance being r. Let the method of regulation be such that there is a torque acting upon the engine, which is, say, $2\beta\psi(x)$. As a simple case we might take this as proportional to x, say $2\beta x$. Let the whole momentum of the engine be imagined gathered in a fly-wheel on the spindle of the governor, of moment of inertia $2I$. Then

$$\frac{d}{dt}\left\{\left(I - \frac{w}{g}r^2\right)a\right\} + \beta\psi(x)r = 0 \quad \ldots\ldots\ldots \quad (2)$$

The solutions of these equations are easy enough for the governors of Figs. 142 and 143. I have sometimes given them to students, but in truth the practical problem has too little in common with this. In the first place part of this suits only a steam turbine, to which one time for regulation is the same as another. Secondly, it is only in electromotors that we have the right to assume that when a regulating device is moved the regulation begins almost immediately. In truth we want $2\beta\psi(x)$ to be a function in which there is a time lag. Thus x is some function of the time; let $\psi(x)$ be called $\phi(t)$, then an approximate solution would be obtained by taking the quickening torque to be, not $2\beta\phi(t)$, but $2\beta\phi(t - m)$ where m is a constant, the amount of time by which the actual regulation lags behind the motion of the governor balls.

I made an attempt myself some time ago to form a theory on these lines, but I had not leisure to finish it, nor can I now recall any useful part of it to my memory.

103. The balls of even the most powerful governor must alter in position if the gear is to be altered, and it is evident that it cannot maintain an absolutely constant speed. For very perfect governing we let a governor with the very smallest motion of its parts command some other agency to shift the gear. Such a **relay governor** may command the movement of great sluice valves of water wheels; it acts as if by pulling the trigger of a gun, or like Von Moltke of the German Army. A common plan is to let it shift the valve which admits steam to an auxiliary steam engine which really does the work.

104. If the governor, instead of throttling the steam, were **to lift and lower a link** of the Stephenson link motion, it would govern the engine in quite a different way. This method is very seldom employed.

But what is very often done is to let the governor affect in some way the point of cut off. To explain how this may be done I will first describe a slide valve which has an **independent cut off valve** on the back of it. In Fig. 150, $H\,L\,D$ is an ordinary slide worked in the ordinary way by a single eccentric or by a link motion. It is the part from D to H which is exactly like a simple slide, but the valve is made larger so that instead of terminating at D and H, D and H are merely two openings in a larger casting. Notice, however, that $D\,H$ has outside lap and inside lap as before, and so

long as steam is allowed to exist at D and H and exhaust at L, this is an ordinary slide valve. The eccentric to move it is usually arranged to cut off at about $\frac{3}{4}$ of the stroke. When a link motion drives it, the motion is never used in intermediate gear, it is always either in full forward or full back gear.

As a matter of fact, we rely upon $H L D$ only for admission, release, and compression. The edges X and Y may cut off in a sense, but it is shutting the stable door after the steed is stolen; they only cut off the port A or C from the steam spaces D or H, but in truth D or

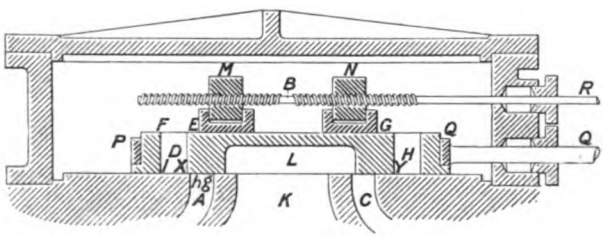

FIG. 150.—INDEPENDENT CUT OFF VALVE.

H has had its own steam cut off previously by the block $M E$ or the block $N G$. The blocks $M E$ and $N G$ are worked by a second spindle, $B R$, driven by an eccentric of its own.

If only one main eccentric works $P Q$, the main valve, the cut off eccentric is about 90° ahead of the main eccentric. This is the best angle. But if $P Q$ is worked by a reversible link motion, the cut off eccentric is symmetrically placed relatively to the fore and back main eccentrics.

I do not think that this motion can be understood by beginners unless there is a model.

With a model one interesting exercise is to show how the cut off alters when we alter the distance from E to G. The rod B has right and left-handed screw threads, so that if it is turned, as it may be by the engine driver or by the action of a governor, the cut off is altered.

Another exercise, more important, is to show how the cut off alters when we alter the travel of the cut off valve. This is the usual way in which the governor varies the cut off, and in Fig. 143 I show how a Hartnell Governor lifts the rod $J L$ and so lifts the valve rod $K L$, the block K sliding in the slot of a link $M N$. M is the fixed point of the link and P is the cut off eccentric rod, and hence when K is lifted the travel of the cut off valve is lessened.

105. There are many forms of **Tappet motion** and **Trip gear** for engines which cut off very sharply without wire-drawing, the cut off being regulated by the governor. A student ought to study very carefully some one form of each kind.

Of the Trip gear the **Corliss** is the most important.

It is easy to arrange a **governor for a marine engine**, but in truth an ordinary governor is not wanted. What is very much wanted indeed is something to do what a fly-wheel does in factory engines, When a vessel pitches, and especially if she has little cargo, her screw gets greatly uncovered by water, there is much less resistance to its motion than usual, and the engine *races*. No governor yet invented is quick enough in its action to prevent racing. A steady speed could certainly be maintained by braking the engine and wasting energy when she went too fast, but nobody has cared to adopt this extravagant method. I cannot imagine anything so good as a fly-wheel; but a fly-wheel for the main engines on board ship has not yet been tried. Possibly a geared fly-wheel may yet be tried running at a very high speed, although one foresees considerable difficulties at its bearings on account of gyrostatic action. Anybody who holds in his hands the frame of a spinning gyrostat will understand what I mean. In the case of the Parsons' steam turbine, which runs at very high speed, there ought to be no great difficulty in applying a fly-wheel to prevent racing. Brown's Governor merely brings all the links of the various cylinders to mid-gear when the speed exceeds a certain limit. Pneumatic and electrical methods are in use for governing by the changing water pressure at the stern. The "Dunlop" and other Governors govern by the change of pressure at the stern of the vessel affecting the steam supply; generally by relay apparatus acting through steam pressure or the condenser vacuum. Some govern by the changing torque in the propeller shaft, and others by the thrust in it. In all cases it has been found necessary to control more than the supply to the high pressure cylinder. See papers by Mr. Blaine in the *Mechanical World*, 1894–6.

CHAPTER XI.

THE BOILER.

106. The Lancashire, multitubular, French and other large and heavy forms of stationary boilers require less attention and cost less than the smaller and lighter marine and locomotive and water-tube boilers; but each suits better than another the conditions under which it is used; a well-designed boiler of any of these types is just about as economical in evaporation of steam per pound of coal as any of the other types. (See tables, Art. 261.)

Modern boilers are expected to stand high pressures with no leakage, giving quietly and steadily a large supply of dry steam economically. Safety, simplicity of construction, ease of access for examination cleaning and repairing, parts easily renewed, durability against wear and tear, these are the important properties expected in all cases. As large differences of temperature occur, especially under forced draught in marine boilers, great care must be taken concerning unequal expansions due to heat. Hydraulic tests are relied upon for tightness of joints and permanent alterations of form, the usual test pressure in the Navy being about 90 lbs. per square inch above the working pressure; but twice the working pressure is the common test pressure in the mercantile marine.

107. While other boilers have greatly altered during the last 30 years there has been but little change in factory boilers. **The Lancashire** (the name given to the Cornish boiler when it has two flues) boiler of Figs. 151–3, and also of Figs. 172–3, is usually 6 or 7 feet in diameter, and 25 to 30 feet long. If there were only one flue its diameter would be about $\frac{4}{9}$ths of that of the shell: when there are two flues, each is about $\frac{2}{5}$ths of that of the shell. The space between them must not be less than 5″, and between each of them and the shell 4″. Such a boiler will evaporate

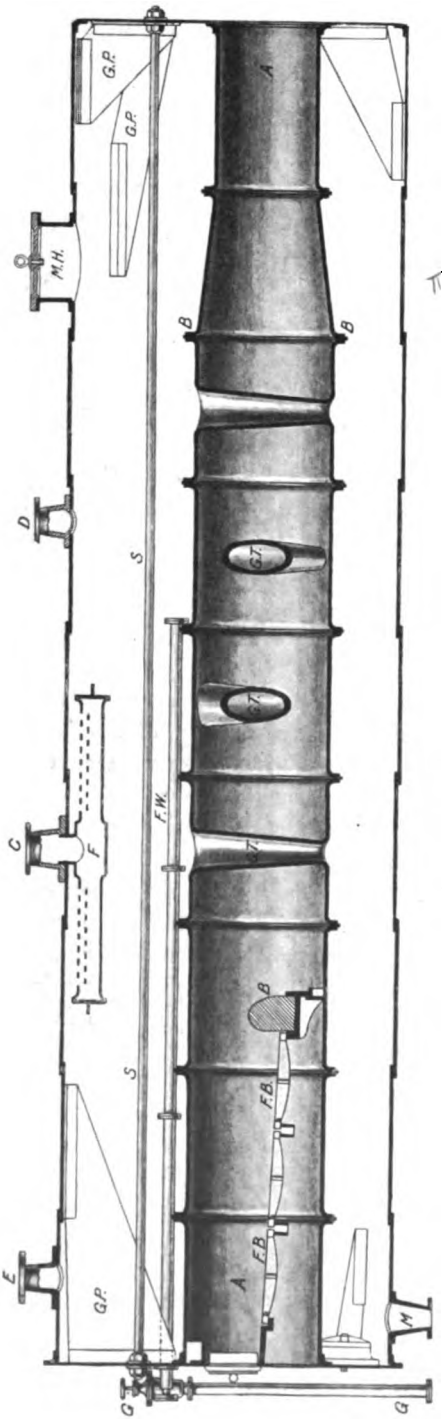

FIG. 151.—SECTION OF A LANCASHIRE BOILER.

from two to three tons of water per hour. All parts of it are easily accessible.

The shell is formed of plates of iron or steel, with single or double riveted joints; a single plate about 20 feet long, $3\frac{1}{2}$ feet wide, forms one of the rings shown in Fig. 151. As a cylindric vessel is twice as likely to burst sidewise as endwise (even neglecting the extra endlong strength due to flues and stays), the straight side seams (they break joint along the boiler) are much more strongly made than the circular seams. Thus if the side seams are double riveted butt-joints, with two covering plates (see Fig. 155), the circular seams are single or double riveted lap joints like Figs. 156 or 157. No side seam is exposed to the flue gases.

The holes for the flues are bored out of the flat end plates (which are also turned up on their edges), and the flues are fastened either by stiff angle irons as shown in Fig. 151, or by flanged ends. **The flue** is formed of lengths of tube, welded up so that there is no visible straight seam: notice that even the **Galloway water tubes,** *G T*, are welded into the flue rings without visible seam.

This is a great advantage, not merely because there is less fear of leakage, but also because riveted joints in any flue are apt to get too hot. Over the grate we are particularly anxious to avoid seams

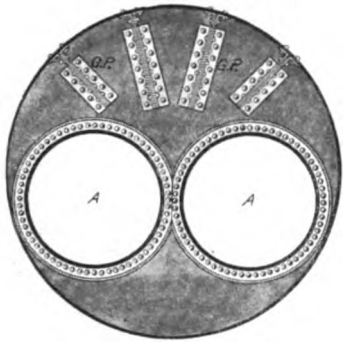

FIG. 152.

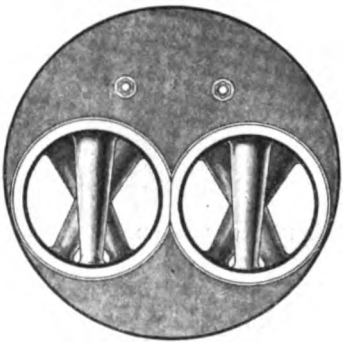

FIG. 153.

Cross sections of Lancashire boiler showing gussets G P, joining of flues to ends, two stays and Galloway tubes.

in all furnaces. The ends of the rings are flanged and riveted together with a ring of plate between which is good for caulking (see Fig. 158). These flanged joints stiffen the flue against a crumpling or buckling kind of collapse, and they are very much better than the rings of Figs. 159, 160, and 161. In all cases it is well that the flanges or rings in the two flues should not be close together, as the

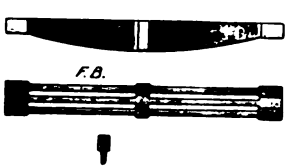

FIG. 154.—FIRE-BARS.

FIG. 155.—DOUBLE RIVETED BUTT-JOINT. TWO COVERING PLATES.

space is already small. Sometimes the lengths of flue are corrugated, as in Fig. 162.

108. Flat parts of boilers need careful staying. Notice the gusset pieces *G P*, Figs. 151 and 152, fastening the ends to the shell, and also the two long stay bolts from end to end. In the figures the gusset pieces come down too closely on the stays, giving too much stiffness. The ends are usually $\frac{5}{8}$ths thick for a working pressure of 100 lbs. per

square inch. The ends ought not to be thicker than is actually necessary for strength, because it is good that they should yield easily. The ends of the shell are in two halves welded together,

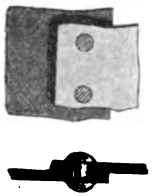

FIG. 156.—SINGLE RIVETED LAP-JOINT

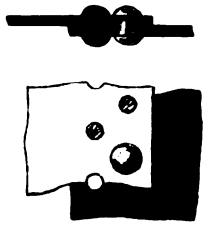

FIG. 157.—DOUBLE RIVETED LAP-JOINT.

turned up on the edge, bored out for the flues. Figs. 153 and 163 show how these bolts are fastened with large washers. They are fairly close together, and 14 inches above the flue. All so necessary as these long bolts may be, some engineers think that they ought not to be used, as they unduly prevent bulging of the ends.

Probably the most important thing to consider in boilers is the effect of **unequal temperatures** in the various parts. Soon after the

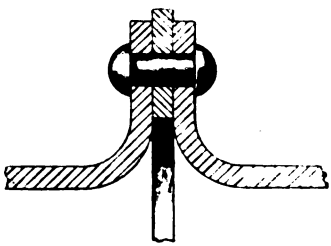

FIG. 158.

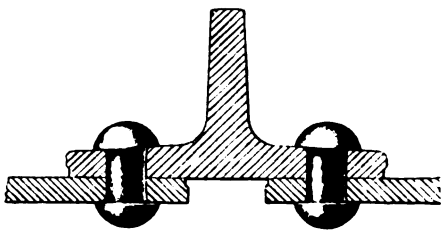

FIG. 159.

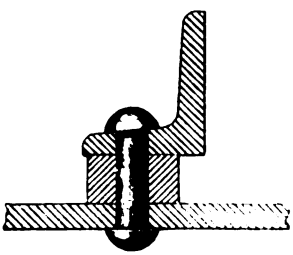

FIG. 160.

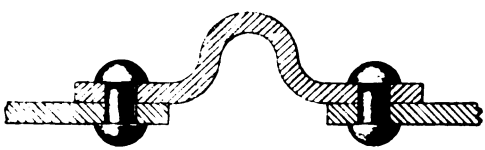

FIG. 161.

fires in a Lancashire boiler are lighted, the front end will be found to bulge or *breathe*, as it is called, as much as $\frac{1}{8}$th of an inch, also the flues are found to *hog* or rise in the middle as much as 0·5 inch.

EXERCISE. In a 30-foot boiler the flues are at 200° C., the shell is at 100° C. What is the difference in the amounts of expansion from 0° C. if both are free to expand?

Answer. ·86″ − ·43″ = ·43″.

It is therefore very important in designing any boiler, to arrange that any part may become larger or smaller without unduly stressing

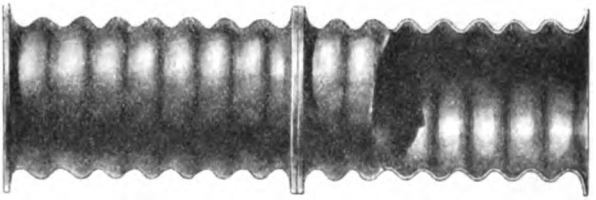

FIG. 162.—CORRUGATED FLUES.

itself or the other parts. It is for this reason that many makers say that 30 feet is the maximum length for a Lancashire boiler. Note that to have an external angle iron at the front allows more spring. We cannot have one at the back, as furnace gases would hurt it. Modern boilers are distinguished by possessing this **thermal springiness**; corrugated flues, flanging of plates in general, and in particular the flanging of the flue rings of Fig. 151. The bent tubes of the Thornycroft boiler (Fig. 209) conduce to springiness. Of course we prevent unequal heating as much as possible. For example, note how the cool feed-water enters by the long pipe *F W* (Fig. 151), as it does also in the marine boiler, so that it cannot produce local rapid cooling of any part of the boiler. The thermal straining of the marine boiler of Fig. 205 shows itself most by the leakage of the tubes in the combustion chamber under forced draught.[1]

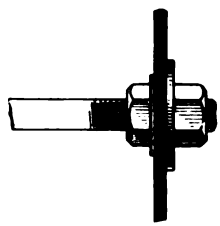

FIG. 163.—END OF LONGITUDINAL STAY.

The theory of strength of a shell really depends upon the pulling force being uniformly distributed round any plane section that may be imagined. When we make a hole, and especially when we make a large hole (this is why we like all fittings to have separate mouth-pieces), care must be taken to so strengthen the plate round the hole, that it may be able to resist the quite different sort of forces introduced because we have a mouth-piece for some kind of fitting, instead of

[1] When the tightness at an iron joint depends on squeezing, a red heat produce an annealing action, and the elastic pressure is apt to disappear; hence tubes leak.

a continuous piece of boiler plate. Fig. 165 will show the sort of precautions taken. A single row of rivets may suffice when an opening is small, but a double row is necessary when the opening is large.

109. The dome, sometimes wrongly used on Lancashire boilers (because it is expensive, weakens the shell, tends to leakage, and is

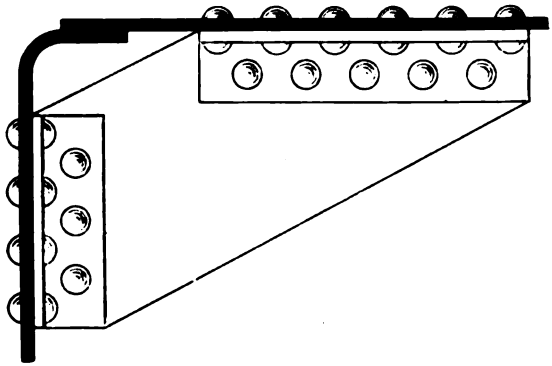

FIG. 164.—GUSSET PIECE.

unnecessary, or unhandy when the boiler is carried or is being turned round on its seat to be mended), as well as on locomotive boilers, needs special care. Some makers do not make a large hole, but merely perforate the plate underneath the dome with many holes.

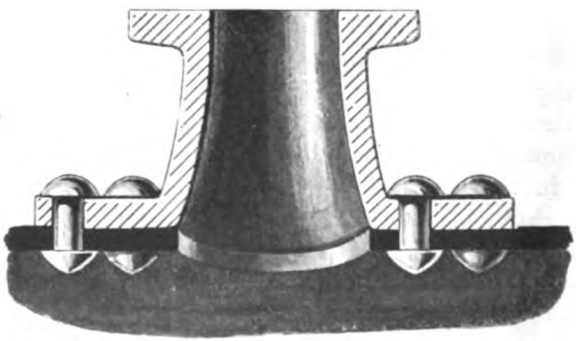

FIG. 165.—SEATING BLOCK.

To attach any fitting we must have suitable **fitting or seating blocks** like Fig. 165, permanently riveted to the shell, and bolt the safety valves, stop valve, man-hole door, &c., to them on truly planed faces. Such seating blocks are never now of cast iron, nor indeed of malleable cast iron, for although this lends itself to the riveting pro-

cess, and is sufficiently malleable for the purpose, we can now obtain forgings or steel castings, which are much stronger. Also we find there is less tendency to leakage, and leakage leads to corrosion. A man-hole fitting of the most approved design is shown in Fig. 166. The boiler, Fig. 151, has no dome. *F* is a horizontal pipe well perforated along its upper surface, and dry steam may be drawn away through the **stop-valve** attached to *C*. The water is in ebullition, the steam space has much spray in it, and domes or other contrivances are adopted so that steam may be drawn off at some place where there is almost no spray without priming. Priming means the carrying off of water with the steam. The steam pipes, however well covered, will allow some more steam to condense, and hence a **separator** like Fig. 3 is interposed before the steam gets to the cylinder. A pound of high pressure steam is produced with less ebullition than one of low pressure steam, because it occupies a smaller volume. Priming is not only excessively wasteful of energy, but it may cause fracture in the cylinder. In boilers powerful for their size, priming leads to unexpected shortness of water. It is produced when there is high water in even a well-arranged boiler if there is too sudden a demand for steam with rapid combustion, and especially if there is much scum on the surface of the water. The only immediate remedy is to check the demand for steam, check the fires, and blow off scum if necessary. When priming is less serious and as it is very troublesome to measure the amount of it, it is usual to blame the cylinder. What is called superheating is in many cases merely the removal by heat of the wetness of the steam.

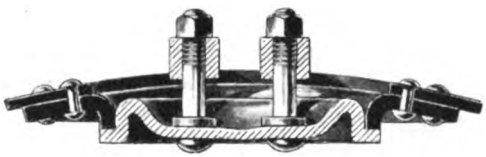

FIG. 166.—MAN-HOLE DOOR.

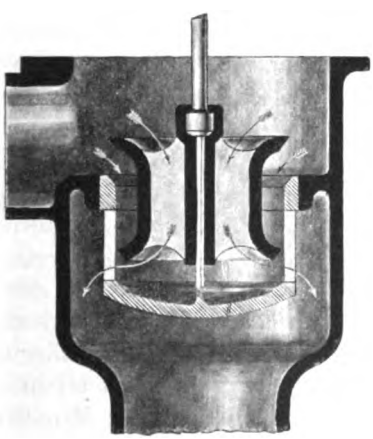

FIG. 167.—EQUILIBRIUM OR DOUBLE BEAT VALVE. SOMETIMES USED AS A STOP OR REGULATION VALVE.

110. The main steam pipe like the feed pipe, common to a number of boilers, and connecting them with the engine, ought not

to be straight, so that there may be elastic yielding to expansion and contraction. This is better than having an expansion joint or expansion diaphragms. The stop valve of each boiler admits steam to the main pipe through a junction piece, which ought to drain down to the main pipe, else it may become filled with condensed water when its boiler is not working. Condensed water produces *water hammer* effects which may cause fractures in pipes.

Figs. 168 to 171 show forms of stop valve which may be used on the fitting *C* in taking steam from the pipe *F*, Fig. 151. The valve is adjusted in position by the handwheel, the screw, and nut. Notice that the nut, which is often out of sight, is much better in sight on a sort of bridge. The stop valve, Fig. 168*a*, used in marine boilers, and the regulator, Fig. 64, used in locomotives, ought also to be studied. The double beat or equilibrium stop valve of Figs. 170 or 171 requires no explanation. There is very little force required to open it or to close it.

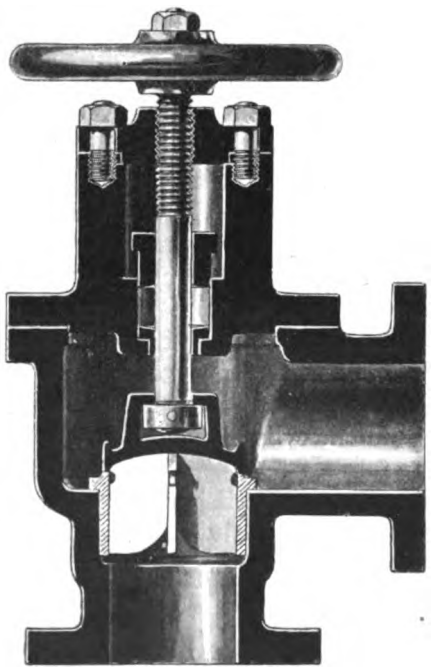

FIG. 168.

M H, Fig. 151, is the manhole, to allow a man to get inside the boiler to clean it. The mouth is one forging and is riveted to the shell with a double row of rivets as in Fig. 166. The boiler is given a "hang" of an inch or two to the front end to ensure complete drainage, and *M* is the mudhole (also with a strong mouth-piece, external or internal) placed at the front so that the boiler may be completely emptied.

Fittings that are frequently in use are attached to the front of the boiler. **The feed** is admitted at *F W*, Fig. 172, at 4 inches above the level of the furnace crowns, so that should the feed valve leak, the boiler water cannot be syphoned away; the feed drops from the dispersing pipe *F W*, Figs. 151 or 173, 12 feet long, perforated for the last 4 feet, in such a way that there is not much local cooling.

The scum tap *S P*, Fig. 172, discharges from the sediment catcher. Two **glass gauges,** *G G*, Figs. 172, 174, 175, show the height of the

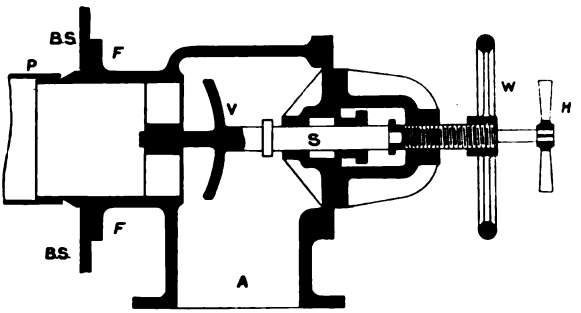

FIG. 168*a*.—MARINE BOILER STOP VALVE.

P is the horizontal steam pipe inside boiler, usually in two branches with many holes in its upper surface, taking steam without priming. The handle H is merely to turn the valve V on its seat. The handwheel W closes the valve and shuts off this boiler from the others. When as shown, the valve keeps open only so long as the boiler pressure exceeds that in the pipes; it will shut if the boiler is receiving steam from the pipes. Note the stuffing-box. There are stop valves of this same kind on the supply to auxiliary engines.

water. There are many forms in the market. When open above and below, the water level is visible in the glass tube. The tube ought to be easily replaceable when broken. The plugs *A*, *B* allow of a wire entering to clean the passages. The stand-pipe *P* is of gun metal, sometimes it is not used. The lowest tap, *C*, allows of blowing off. In modern boilers all cocks are packed inside with asbestos. In marine boilers the three cocks may be opened from the stokehold floor. Usually three common taps (**test cocks**) are also provided (sometimes on the standpipe, usually on the boiler shell), one above, one below, and another just about at the usual water level. Much judgment is necessary as to the water level in a marine boiler when a vessel has a list to one side and also on a locomotive on a steep incline. *P G*, Fig. 172, is a **Bourdon pressure gauge** shown also in Fig. 176. Sometimes two are used on each boiler. By turning the handle the steam pressure is applied to the tube *B D C*, whose section is shown at *A*. Such a tube tends to straighten itself

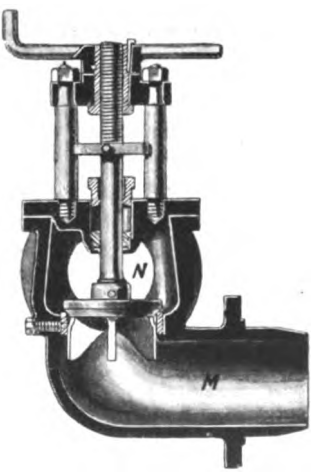

FIG. 169.

because this allows it to become larger in volume, and in doing so its closed free end E pulls a link, and by the spur sector and

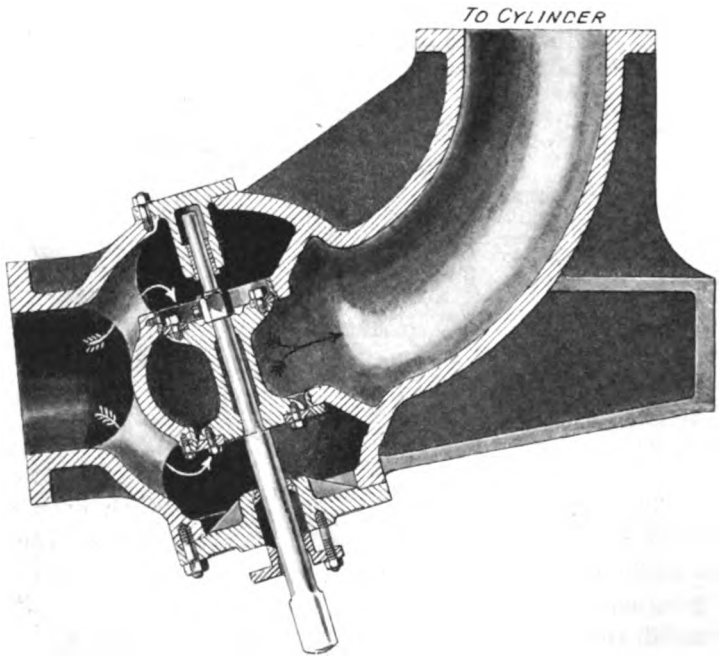

FIG. 170.—MARINE ENGINE REGULATOR. A DOUBLE BEAT VALVE.

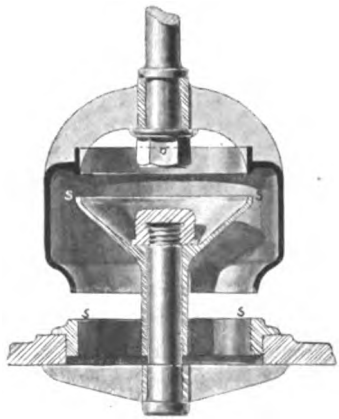

FIG. 171.—DOUBLE BEAT VALVE.
Sometimes used as a stop or regulator valve.

pinion turns the pointer, whose angular motion is nearly proportional to the pressure (above atmospheric). Such gauges ought

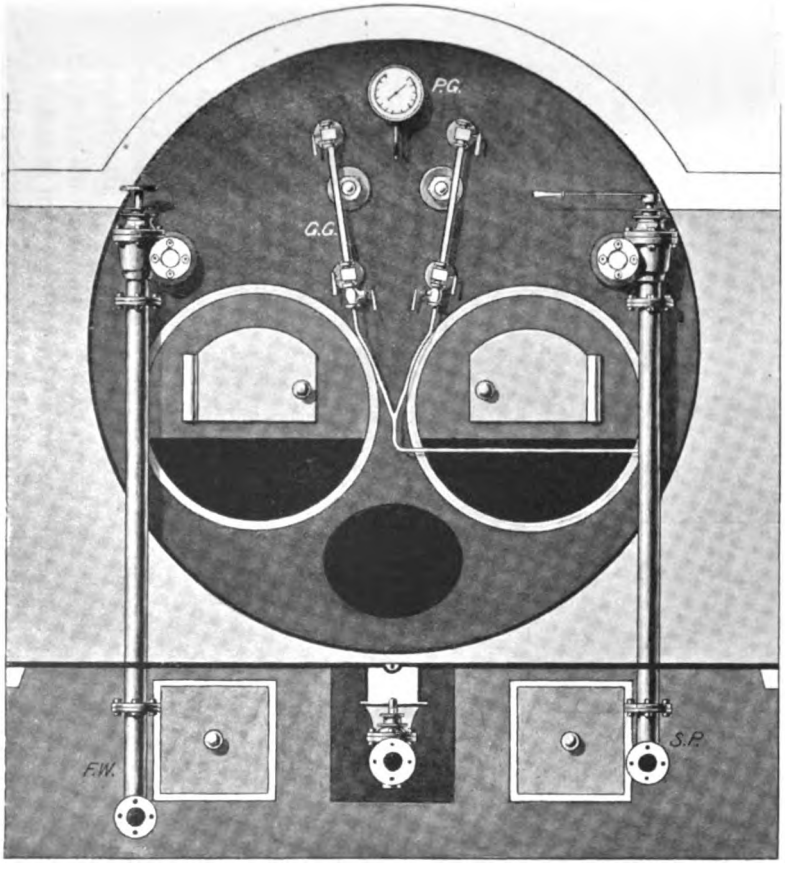

Fig. 172.

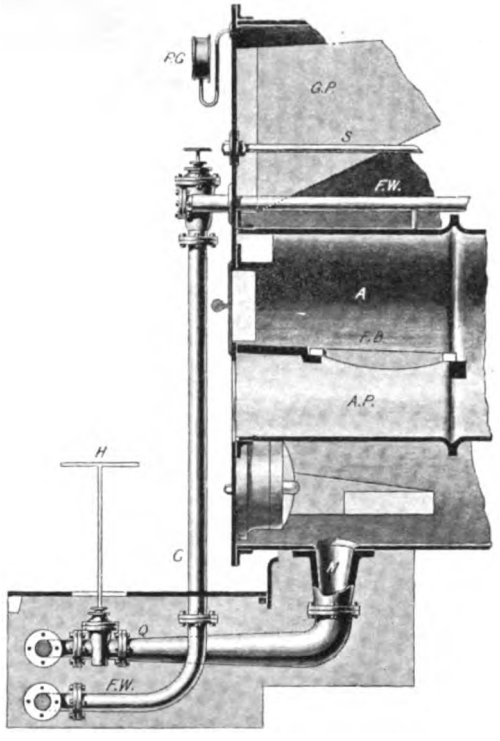

Fig. 173.

Front of Lancashire Boiler.

not to be applied in accurate testing, as the metal of the tube is not truly elastic, and the readings are not exactly the same always for the same pressure; in a quick rise, for example, as compared with a quick fall.

A vacuum valve opening inwards ought to be fitted on the boiler

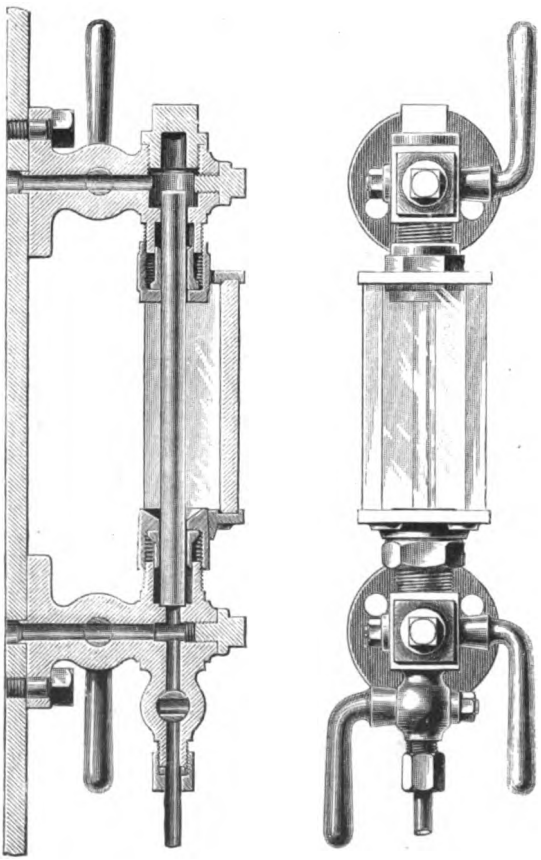

FIG. 174.—GAUGE GLASS WITH PROTECTOR.

Some engineers in fear of scum, connect the upper part with the steam space through a long pipe, and sometimes use a long pipe to the water space.

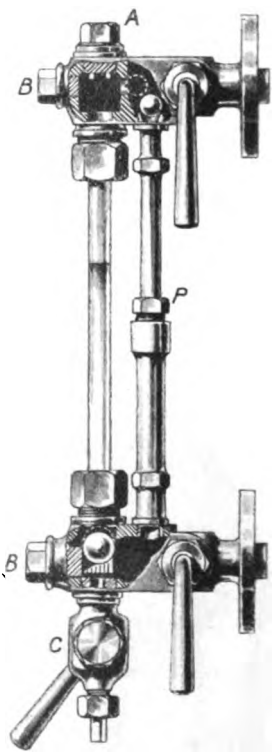

FIG. 175.—GAUGE GLASS WITH STAND PIPE.

so that the boiler may neither fill with water through some accidental cause, nor be subjected to the collapsing pressure of the atmosphere.

A fusible plug consists of a bronze case, Fig. 177, filled with fusible metal screwed into another bronze case, which in its turn is screwed into a socket screwed into the crown of the furnace, the plug itself

being in the water. They are of many shapes and are sometimes to be relied upon. Alloys of tin and lead melt at temperatures varying from 360° F. to 600° F. The plug, Fig. 178, a bronze case containing lead, is screwed into the crown of a locomotive firebox; the lead is supposed to melt when the crown gets uncovered by water; but if this is to take place at the right time it is necessary to examine the plugs often as the lead wastes away.

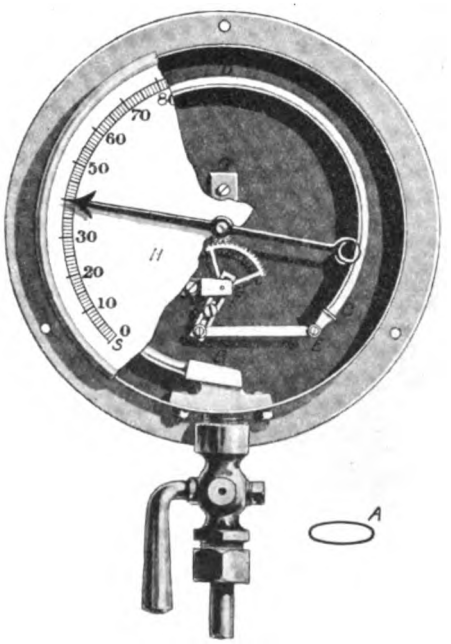

FIG. 176.—BOURDON'S PRESSURE GAUGE.

The feed back pressure valve, Fig. 179, is usually made large enough to do with a very small lift because of wear and tear. The nut is best outside the case (inside is very usual), because the threads are visible and in case they get worn this is important. The valve ought to be low with respect to *B*, because there is inequality of flow round the opening and more wear on one side. We find two on a marine boiler, one from the main feed pumps, the other from the auxiliary feed pumps. Fig. 180 is a form (usually called a clack box) used more especially on locomotives.

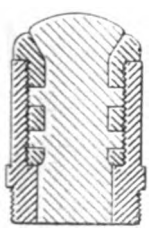

FIG. 177.

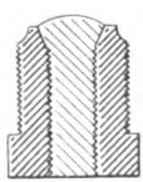

FIG. 178.

FUSIBLE PLUGS.

111. On *E*, Fig. 151, is fixed a deadweight **safety valve,** shown in Fig. 181. Being spherical, *V*, the valve, cannot easily stick in its seat, and there is great stability because the centre of gravity of the weight is low. Each annular weight of *W* represents five pounds to the square inch. The valve is 4″ diameter and the load great, and therefore accidental increments to the load, such as the weight of a few bricks, produce small effects.

Note that with all these fittings at the front of the boiler the stoker, without climbing any ladder, sees the height of the water, and the pressure of steam; his blow-out tap is handy, behind him is his coal and his damper balance. If he has been properly encouraged, he is really a skilled workman and he keeps the boiler-room perfectly tidy-looking, the floor clean, no evidence of leaking water, the brass and other beading on the furnace mounting parts bright.

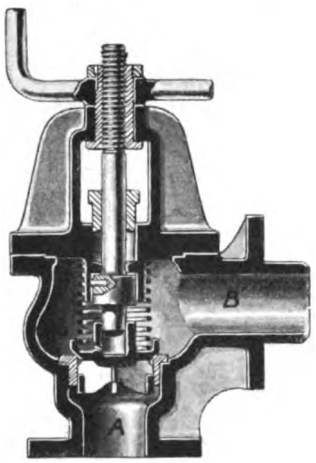

FIG. 179.

The flooring plates ought not to butt up against the boiler; they ought to be easily lifted so that the hearth-pit may be open all along a range of boilers. In it is the main feed pipe and the discharge pipe for blowing out scum. The pit may be 3 feet wide, 2½ deep. The flue doors open into it. The brickwork is shown in Fig. 173, set back 6″ in front to be clear of the angle iron. The front wall is recessed round the blow-out elbow pipe, leaving it free in case of settlement.

112. The best covering for a stationary boiler is an arch of brickwork with a 2-inch clearance from the shell. This space may be filled with cork shavings or other non-conducting material. The openings in this brick arch, about the fittings exposing the ring of rivets, ought to be nicely rounded at the edges. Fine hair felt and air give the best kind of covering for other boilers. Waste products from paper manufacture, also sawdust and starch, also sawdust and cement, also fossil meal, also slag wool wrapped in felt or wood, have all been used in coverings 3 to 6 inches thick. Where the covering is applied in the form of a paste in marine work, wire netting is used, embedded in the stuff to bind it together and prevent cracking and falling off. The results of experiments as to the effects of these various coverings, which are usually quoted in books, seem to me quite unreliable. Whatever method of covering is adopted, all the rings of rivets round the fitting blocks ought to be exposed to view.

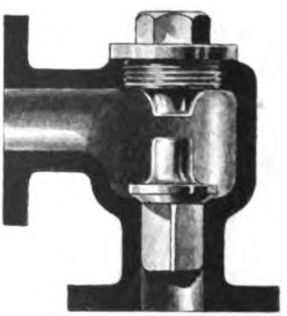
FIG. 180.—CLACK BOX.

The **low water safety valve** needs frequent testing and an examination every time the boiler is cleaned. It is fitted to *D*, Fig. 151. The valve $2\frac{1}{2}''$ diameter, is loaded directly by a spindle with a weight; also by another weight and negatively by a float through a lever. When the water is too low the weight of the float is greater and causes less pull on the valve spindle, and the valve lifts and gives an alarm. The valve *V* if it lifts, lifts another valve *V'* of 5″ diameter, but *V'* may lift independently of *V*, being a lever loaded safety valve. It is important that even a skilled workman may not have it in his power to tamper with safety valves.

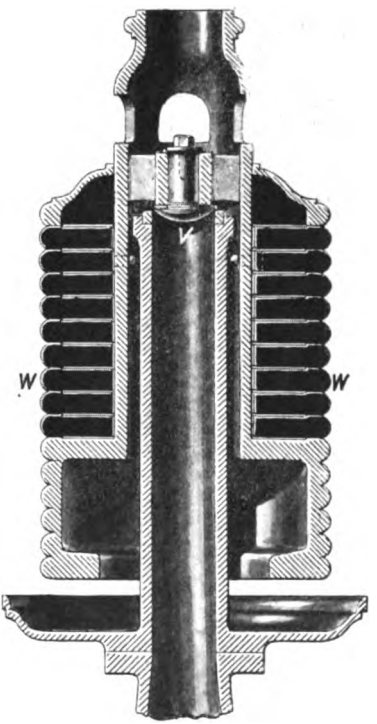

FIG. 181.—DEADWEIGHT SAFETY VALVE.

Fig. 182 shows a **lever safety valve,** well known to everybody. Note that the seat is flat and very narrow.

EXERCISE. The valve has an area of about 5 square inches. The horizontal distances are *CD* = 3″, *DG* = 10″ (*G* is above the centre of gravity of the lever and the lever weighs 6 lbs.); *E* is above the centre of gravity of the weight, which is 60 lbs. The valve, &c., weigh 7 lbs. Find the distance *DE* if the valve is to lift at 120 lbs. per square inch above atmosphere. Repeat the calculation for the pressures 110, 100, 90, &c.

Answer. 28·65, 26·15, 23·65, 21·15, &c. Hence the marks showing the positions of *E* on such a lever if it is graduated are $2\frac{1}{2}$ inches apart for every 10 lbs. difference in pressure.

Weights, whether direct or through levers, are replaced by springs when for locomotive and marine safety valves. Now **when a safety valve opens** and steam is escaping, the total force exerted by the steam may be greater or may be less than when the valve was closed, depending upon the shape of it. It does not seem to be sufficiently known that by properly shaping the under surface of a valve, and especially by extending it beyond its seat, it is easy to get

greater lifting force when the valve is open. Some engineers have for long been applying this principle. Generally the lifting force is less if the valve is open. For example, even in weighted safety valves it has been found that when set to lift at 60 lbs. per square inch, even twice the lifting pressure was needed to keep the valve sufficiently open for the escape of steam. This was probably too small a valve for the size of boiler. It is evident that a number of small valves must be better than one large one because there is more opening for the same lift.[1] In well-proportioned dead weight safety valves it is usually expected that if a pressure of 60 lbs. per square inch opens the valve, a pressure of 70 lbs. will keep it sufficiently open for the escape of all the steam produced. It would be better if the load diminished as the valve opened more and more.

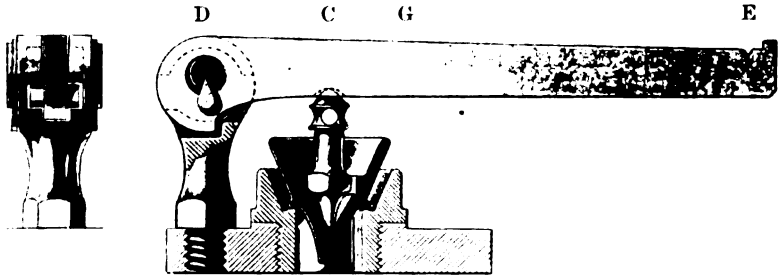

FIG. 182.—LEVER SAFETY VALVE.

Unfortunately, when a spring is used, the more the valve opens the greater is the force exerted by the spring, so that the evil is intensified.

Much ingenuity has been displayed in remedying this defect, but in marine boilers reliance is usually placed upon largeness of valves, and using two or three on one valve box so as to get sufficient opening with small lift; also upon the use of so long a spring that a small amount (about $\frac{1}{8}$th of an inch at most) of extra compression produces but little extra force in the valve lift.

Thus the springs are usually compressed axially by an amount equal to the diameter of a valve when it is closed; the extra force is of course proportional to the extra compression. Notice in Fig. 183 how the cap is held compressing the springs, and how the compression may be adjusted by the nuts. Steam escapes into the

[1] A valve of diameter (D) and lift (l), the edge area is πDl. If we have two of the same total area, each has a diameter $\cdot 707\ D$, and the sum of their edge areas is $2 \times \pi \times \cdot 707\ Dl$, or $1 \cdot 414$ times the first.

waste steam pipe which goes up alongside the funnel. Also notice that the valves may be lifted by the lever L independently, either from the deck of a vessel or the stokehold.

It has been found that a $1\frac{1}{4}$-inch pipe will discharge steam from the most powerful locomotive boiler as fast as it can be generated.

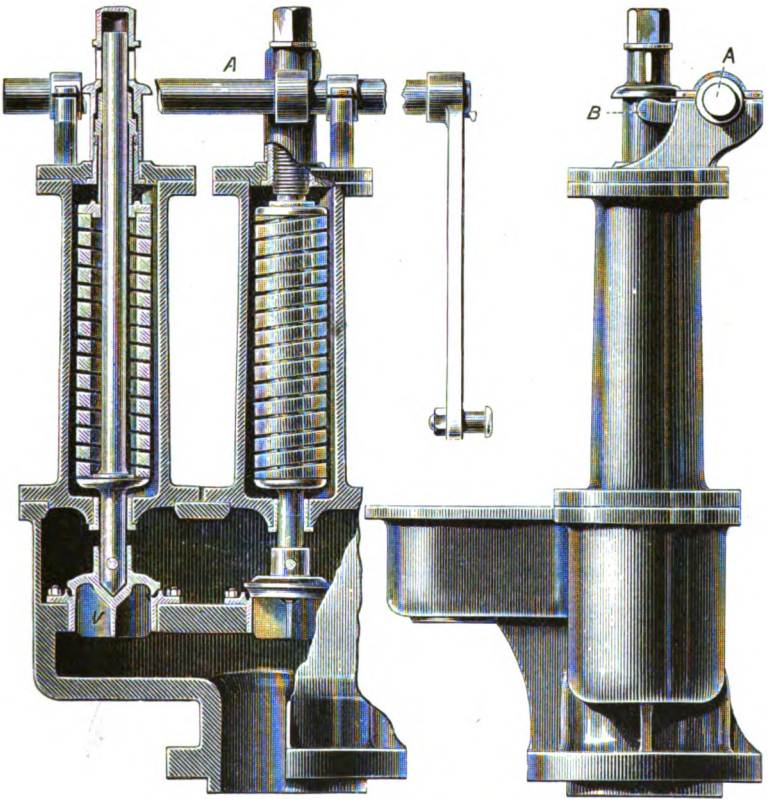

FIG. 183.—MARINE SAFETY VALVE.

The kinds of safety valve used on locomotives are the spring lever and the Ramsbottom. In the first we have an ordinary lever safety valve loaded by a spring instead of a weight.

The **Ramsbottom** arrangement is shown in Fig. 184. The two valves at A and B tend to lift equally against the force of the spring. For if A lifts before B the load on B slightly diminishes and the load on A increases, because the point C is at a level below the point A. The piece $A\,B$ is lengthened to enable the driver to try the valves. He is able to diminish the load on either valve, but

not to increase it. In this arrangement there is no compensation for the increased pull of the spring as the valves open.

The "Naylor" contrivance for altering the leverage when the valve opens was one of the first methods adopted, and the principle on which it acts is that of subsequent forms of which there are

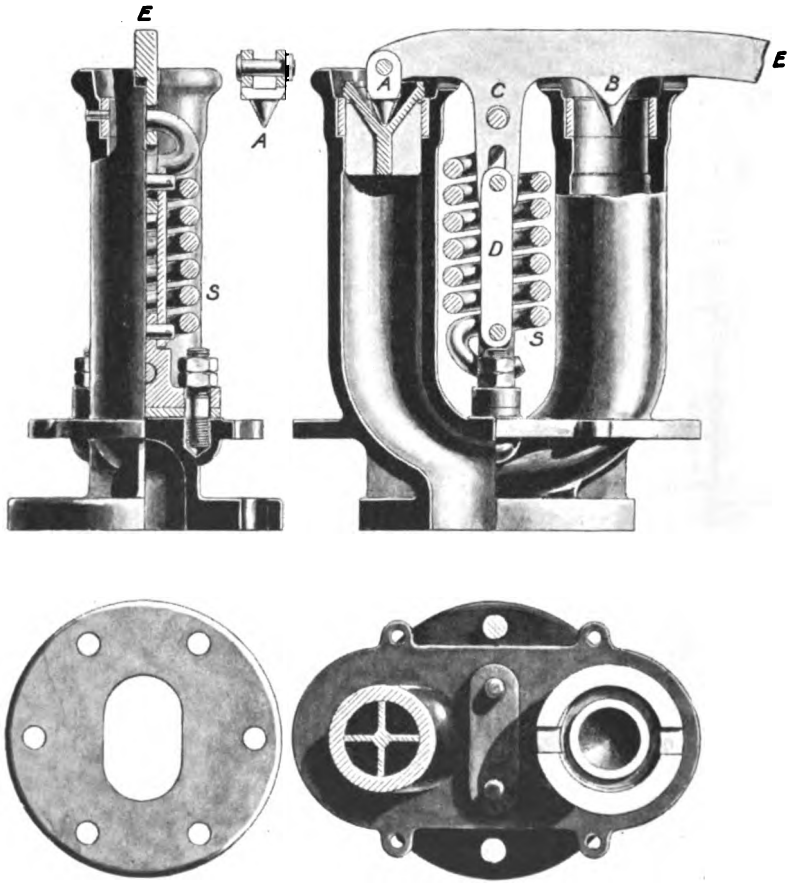

FIG. 184.—RAMSBOTTOM SAFETY VALVE.

many. A spring kept the valve pressed down upon its seat through a bent lever, and when the valve opened the leverage of the spring diminished on account of the shape of the lever, and therefore the tendency of the spring to keep the valve closed did not get greater although the pull in the spring itself might be greater; indeed, the tendency to keep the valve closed might be lessened as the valve

opened, depending on the exact lengths and shapes of the two parts of the lever.

This same principle of compensation is used in many other applications of springs—when it is thought necessary to diminish the influence of a spring, as it is more strained. I have myself used the idea in the construction of measuring instruments.

In practice it is found that with ordinary care **regularly inspected** factory boilers almost never burst. Ordinary care involves: 1. Attention to water gauges (never let water level sink out of sight, and often try the cocks), and blow off cocks (sediment in elbow pipes before starting engine, and scum before stopping to be cleared off); never empty boiler when steam is up. 2. Never raise steam hurriedly: in a Lancashire boiler six hours are often given to gradual heating from cold condition. 3. Clean monthly or oftener, removing scale when soft, that is, as the cool boiler gradually empties of water, remove scale about water level. Sweep plates and flues every three months. Leakages ought to be stopped at once to avoid corrosion. Fusible plugs cleaned both on fire and water sides once a month, and the fusible metal renewed once a year. All cocks ought to be examined once a month. 4. Ease and test safety valves and low water alarms every day and never overload. Beware of condensed water before opening a stop valve and open gradually. 5. Use no unknown chemicals for the prevention of scale. 6. At every opportunity raise objections to the admission of oil with the feed water. If oil must be used in the engine cylinder (and it need not be) let it be filtered out of the feed-water.

CHAPTER XII.

STRENGTH OF BOILERS.

113. Strength of Thin Shells.—In thin-shelled vessels, such as boilers and pipes, subjected to fluid pressure p inside, we assume that the tensile stress f is the same throughout the thickness; so that if a is the area of *metal* cut through at any *plane* section of the boiler, af is the resistance of the metal to the bursting of the boiler at that section. The force tending to cause bursting is Ap if A is the *whole* area of this plane section of the boiler. Hence the law of strength is

$$af = Ap \quad . \quad . \quad . \quad . \quad . \quad . \quad . \quad . \quad . \quad . \quad . \quad (1).$$

(I.) Thus in a **spherical thin boiler** of diameter d and thickness t, if we consider a plane diametrical section, A is $\frac{\pi}{4}d^2$ and a is πdt, and hence (1) becomes $\pi dtf = \frac{\pi}{4}d^2p$, or

$$p = 4\,tf/d \quad . \quad . \quad . \quad . \quad . \quad . \quad . \quad . \quad . \quad . \quad . \quad (2).$$

It is easy to show that there is more tendency to burst at a diametrical section than any other.

(II.) In **a thin tube** of diameter d and thickness t

1. Consider a section at right angles to the axis, A is $\frac{\pi}{4}d^2$ and a is πdt, and hence we get the same rule as for a spherical shell.

(2). Consider a section through the axis and imagine the boiler so long that the strength of the ends may be neglected. If l is the length, A is ld and a is $2lt$, and (1) leads to

$$p = 2\,tf/d \quad . \quad . \quad . \quad . \quad . \quad . \quad . \quad . \quad . \quad . \quad (3).$$

Hence *the tendency to burst laterally is twice as great as the tendency to burst endwise.* Also if we study in the same way the tendency to burst at any other section we find that (3) gives the least bursting pressure, and so we use it in calculations.

Note.—To prove that the force tending to cause bursting at a plane section of area A is pA. Let DE, Fig. 185*a*, be a thin boiler, inside which there is the uniform pressure p. The pressure is always greater at greater depths in any fluid because of its weight, but I shall neglect this. The fluid forces are everywhere normal to the shell: what is the resultant of all the forces acting on the part BFC? Now these forces are exactly the same on BFC, Fig. 185*b*. But in Fig. 185*b* the whole boiler consists of the part BFC and a plane rigid plate BC, on which the forces are all parallel, so that we can find their resultant. The resultant force on BC is its area A multiplied

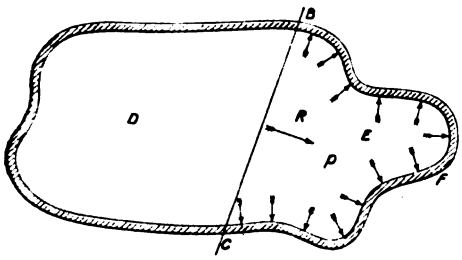

FIG. 185*a*.

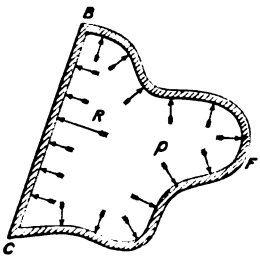

FIG 185*b*.

by p, and we know that this must be equal and opposite to the resultant force on BFC. The principle used in this proof is the fundamental principle of mechanics; Newton's great law (sometimes called three laws) of motion is perfectly easy to understand, and, when understood, applicable to the solution of most complex questions.

If the boiler (Fig. 185*b*) were placed on a truck with frictionless wheels, there would be no more tendency to move on a level road (or on any road if we neglect weight) when there is great pressure inside than when there is little. The force due to pressure on any one little portion of the surface balances the forces on all the rest of the surface. Hence it is that if we make a hole there is a want of balance, and our truck will tend to move. When we make a hole anywhere the pressure is no longer the same everywhere because the fluid is in motion, and hence we can only calculate the unbalanced force by knowing the momentum which leaves the vessel per second.

114. *Storage Capacity of Cylindric Vessels.*—The volume of the cylinder being v, and the safe pressure p, we may take vp as proportional to the energy which may be stored. If the diameter is d, and thickness t, and length l, the volume is $v = \frac{\pi}{4} d^2 l$. The safe pressure is $p = 2tf/d$. The weight of the metal is $W = \pi dtlw$, if w is the weight of unit volume of the material. The surface of the vessel is $S = \pi dl$. In all cases we neglect the ends. The storage capacity for energy per unit weight of vessel is $\frac{\pi}{4} d^2 l \frac{2tf}{d} \div \pi dtlw$ or $f/2w$, so we see that it is independent of the diameter. In tubes of water-tube boilers, in which the surface ought to be great, we want surface $\div vp$ to be great. This is $2/tf$ or $4/pd$. Hence the thinner the tubes are, and if the pressure is fixed, the smaller they are, the more surface they have as compared with their storage capacity for energy; for somewhat similar reasons we need small thin tubes in surface condensers. In cases where energy is stored in hot water and steam (see Art. 123) the rate of loss of energy is proportional to the surface, and so we require thick boilers of large diameter. The best shape, if otherwise convenient, is obviously the spherical shape. Questions of cost, convenience, and danger, modify these general results in their applications.

115. Fig. 186 shows some **forms of rivets** before and after the making of the heads. Figs. 155–7 show some joints.

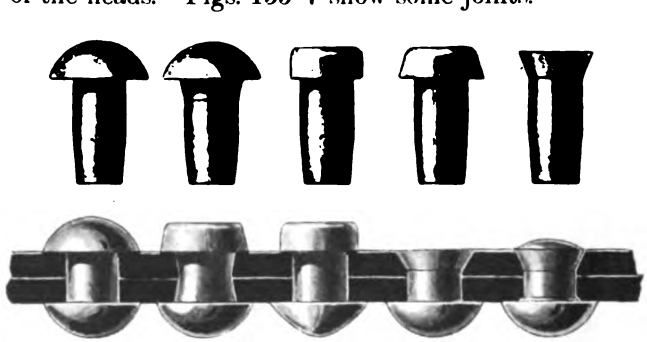

FIG. 186.—FORMS OF RIVETS.

Fig. 187 shows the various ways in which we may imagine a strip of plate or the rivet which corresponds to it to break (1) the rivet breaking in single shear, (5) in double shear.

The diameter of a rivet hole is settled, for plates that are punched, by a variety of considerations, which lead to the rule (t being the thickness of the plate) $d = 1{\cdot}2\sqrt{t}$. The pitch or spacing of the rivets is settled by the consideration that we may imagine each rivet to correspond to a strip of plate of width w and thickness t. When rivets are in double shear w will evidently be just twice what it is in single shear.

In single shear, the shearing resistance of the rivet is $\frac{\pi}{4} d^2 f^1$;

the tearing resistance of the strip of width w is wtf if f and f^1 are the resistances of the material to tension and shearing. If these are equal, we find $w = \frac{\pi}{4} d^2 f^1/tf$. Draw round each rivet a circle of diameter $d + w$ and let lines come dividing the plate up into strips of the breadth w, so that we allot a strip of plate to each rivet. There is more interest in scheming out the proportions of riveted joints in this way than in working common puzzles.

116. The strength of the joint ought evidently to be the fraction $\frac{p-d}{d}$ of the unhurt plate, if p is the pitch of a row of rivets; or calling $p-d$ by the letter A; $\frac{A}{A+d}$ expresses the relative strength. Students know that when we have only guiding notions like the

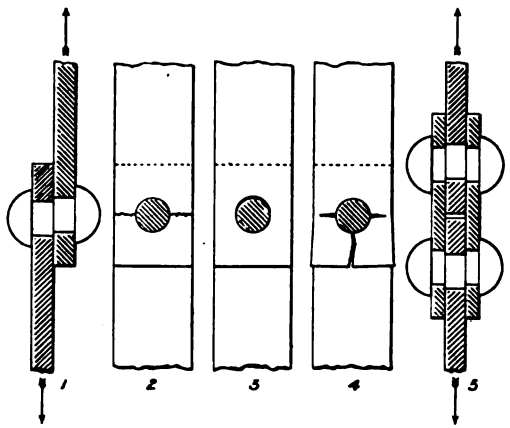

FIG. 187.

above we must resort to experiment, and actual measurement shows that instead of A in the numerator of the above fraction we ought to take kA where k is some number. By means of the above kind of theory and the results of numerous experiments made up to the present time by experienced men, the author has been led to the following easy rule for the strength of well-riveted joints. Hydraulic riveting is almost always better than that done by hand. Indeed, steel riveting is hardly ever done by hand because of the greater probability of overheating rivets.

If t is the thickness of the plate, the diameter of each rivet-hole is $d = 1{\cdot}2\sqrt{t}$, the pitch $p = A + d$, and the strength of the

joint $= \frac{kA}{A+d} \times$ strength of the unhurt plate, where k is given in the following table:—

	Iron plates.	Steel plates.
Single riveted, drilled holes . .	·88	1·0
,, ,, punched ,, . .	·77	0·9
Double ,, drilled ,, . .	·95	1·06
,, ,, punched ,, . .	·85	1·0
Treble ,, drilled ,, . .	—	1·08

and A is given in the following table:—

		Iron plates and iron rivets.		Steel plates and steel rivets.	
		Drilled holes.	Punched holes.	Drilled holes.	Punched holes.
Lap joint or butt joint with one covering plate	Single riveted	1·20	1·47	0·9	1·08
	Double ,,	2·22	2·66	1·7	1·93
	Treble ,,	3·23	—	2·5	—

All these values of A are to be doubled for butt joints with two covering plates. The distance of a hole from the edge of the plate must not be less than d, and when only half-inch rivets are used there is an additional quarter of an inch.

The friction between the plates caused by the contraction of rivets in cooling gives additional strength, which is usually neglected because it is of unknown amount. **Caulking** (inside and outside all joints) is performed by a blunt-edged tool which indents the metal of the edge of one plate into the other; a fullering tool produces a more uniform tight contact of the overlapping parts. Caulking, especially if done with too sharp a tool, may hurt the plate; in any case it alters the surface, and this may induce "grooving."

A punched hole is to be called **a drilled hole** if the plate has been annealed or if the hole has been rhymered out after punching. All drilled holes must be slightly counter-sunk on the outer side and all burrs removed. The old careless, senseless **boiler-shop methods** led to non-agreement of holes when they came together, and only about 5 per cent. of the holes being really true to one another, a violent drifting process was resorted to. Modern methods are carefully scientific, so that even much rhymering is not needed. We now use drilling machines, hydraulic riveters, edge planing machines, &c.,

and all good work is done to templates. Angle irons are greatly dispensed with, the edges of plates being flanged. Great care is taken as to details, such as whether rivets in certain places ought or ought not to have countersunk heads. Flanging, dishing, and rolling processes are done quickly by large tools at one heating of the plates instead of being done by hand in many heats, and this adds greatly to the strength of boilers, and what is as important, our knowledge of that strength.

117. The working value of f for **copper** in Art. 113 ought not to be taken greater than 2,400 lbs. per square inch for steam pipes. Copper is used for steam pipes because it is easily worked cold, but indeed steel is now being generally used instead of copper.

Copper for fire box plates (generally $\frac{1}{2}$ inch thick) or short stays or rivets has a tensile strength of about 16 tons per square inch, and elongates about 25 per cent. before fracture. Small holes are drilled into such stays from the ends, so that fracture may be detected by leakage. Alloys of copper change so greatly in their strength qualities as to be unreliable at 350° F. or 400° F., whereas pure copper can be relied upon up to 800° F., as, indeed, iron and mild steel may be, although they are all rather weaker than at ordinary temperatures. The malleability of copper and its endurance of furnace heat without surface deterioration cause many engineers to prefer it in furnaces and tubes to iron or steel.

In **cast-iron pipes** and in steam engine cylinders, it has to be remembered that the difficulty in getting castings which are of the same thickness everywhere, and the allowance that must be made for tendency to cross-breaking when the pipes are handled, as well as the great allowance in cylinders for stiffness and the difficulty of casting and boring out, cause such calculations as might be suggested by the formula (3) of Art. 113, to be somewhat useless. Thus it will usually be found that, whereas a large cast-iron water pipe is not much thicker than the above formula would lead to (taking the working f as not greater than 3,000 for cast iron), because it is usually carefully moulded in loam, yet a thin cast-iron pipe has often an average thickness twice as great as the formula would lead to, and we never attempt to cast a nine-foot length of pipe of less than $\frac{3}{8}$th inch thick.

118. The law of strength of a strut is exactly the same as that of a tie bar if artificial means are provided for preventing bending. For the same reason the law (3), Art. 113, gives the **strength of a flue** to resist collapse, the working compressive stress which the material will stand being f lb. per square inch, the diameter d inches, and the thickness t inches; but this is on condition that

all tendency to buckling is artificially prevented by using rings like those shown in Figs. 158–161.

The flues of Fig. 151 are built up of rings (each ring being a plate bent and welded upon itself) flanged at the ends as shown. The flanged joints give sufficient stiffness for resisting buckling, and the Galloway tubes help in this. Figs. 162, 197, 205 show corrugated flues, the corrugations producing the same effect in resisting buckling. The thickness of any of these flues is to be taken as the total section in an axial length l, divided by l. We have as yet no exact knowledge of the behaviour of thin tubes under external pressure. There is a theory, but it can be of but little use to the engineer until it has been tested by experiment; it leads to the result that if a tube of diameter d and thickness t is prevented from collapse by rings, the distance between the rings divided by $\sqrt{dt}$ must not exceed a certain limit. Assuming the theory to be correct, we do not know yet what the limit is. In strengthening the flues of Lancashire boilers, the distance between the rings is usually $10\sqrt{dt}$. The working value of f for flues is in practice taken as only 2 tons per square inch, first because of doubtfulness as to possible buckling, second because of oxidation and other deterioration due to the flame, third because steel and iron at 600° F. cannot be depended on for a greater strength or ductility than half their strength when cold, and above this temperature there is a further great lowering in strength and increase of brittleness. **Steel used for boilers** has about 28 tons per square inch tensile strength with an elongation of 25 per cent. in the direction of rolling, the breaking stress being 6 per cent. less and the elongation 20 per cent. less in the cross direction. The following composition is recommended. Carbon ·16 to ·18 per cent., silicon ·01 to ·018 per cent., sulphur ·03 to ·05 per cent., phosphorus ·02 to ·04 per cent., manganese ·25 to ·48 per cent. The plates must be clean looking, and must be annealed after shearing. The maker's name ought to be on every plate; every plate while in a boiler shop has a number for identification, and its strength and other qualities are known. Test strips heated and cooled in water at 80° F. should bend to a circle of internal diameter only three times the thickness. Rivet steel ought to have less than ·15 per cent. of carbon and ·04 per cent. of phosphorus, and ought to show no flaw when a straight strip is doubled back upon itself cold. The time spent in straightening plates is greatly lessened by the use of multiple roller straightening machines.

119. Exercises. Strength of Cylindric Shells, and Flues and Pipes.—The strength of a thin tube is given by

$$p = 2\,tf/d$$

where p is the difference of pressure inside and outside in pounds per square inch, t the thickness (or effective thickness if the tube is corrugated or has strengthening rings), d the average diameter, f the tensile (or compressive in the case of flues), stress on the material in pounds per square inch. If p is the working gauge pressure, f in tension may be taken as 5 tons per square inch for iron, and 7 for mild steel; f in compression is usually taken as only 2 tons per square inch. The weakening of a plate produced by a riveted joint is known from Art. 116.

EXERCISE 1. A boiler 7 feet diameter is $\frac{5}{8}$th inch thick, what safe working pressure will it stand if the safe working tensile stress of the material is 5 tons per square inch? Assume that the longitudinal seams have a strength only 60 per cent. of that of the plate itself. That is, take the safe stress to be 60 per cent. of $5 \times 2{,}240$ or 6,720 lbs. per square inch, so that

safe gauge pressure $= 6{,}720 \times \frac{5}{8} \div 42 = 100$ lbs. per square inch.

2. What must be the thickness of the flue of this boiler if its diameter is 2′ 9″, and if the welded joint in it is assumed to stand a working crushing stress of 2 tons per square inch. *Answer.* $\frac{3}{8}$ of an inch.

3. The marine boiler shell, Fig. 206, is 16 feet diameter, and withstands a gauge pressure of 150 lbs. per square inch; if the thickness is $1\frac{1}{4}$ inch, what is f? *Answer.* 9,600.

4. The corrugated flue of Fig. 206 is 4 feet average diameter, the length of metal is 1·3 times the axial length, the metal is $\frac{3}{8}$ inch thick, the working gauge pressure is 150, what is f? *Answer.* 7,400.

5. The steam vessel of a water tube boiler is 30 inches in diameter, thickness $\frac{3}{8}$ inch, pressure 200 lbs. per square inch, find f. *Answer.* 8,000.

6. Each of the tubes of a boiler is 1·5 inches in diameter, and 0·25 inch thick; if f is 8,000 find p. *Answer.* 2,600 lbs. per square inch.

EXERCISE 2. A boiler like Fig. 151 intended for 100 lbs. per square inch (gauge) is usually of steel $\frac{1}{2}$″ to $\frac{9}{16}$″ thick in its 7 foot shell, the straight seams being double riveted butt joints with two covering plates, its 33″ flues being $\frac{3}{8}$″ to $\frac{1}{2}$″ thick. Neglecting the extra virtual thickness due to the joints in the flues, what are the greatest stresses in the metal taking the smaller thicknesses?

Answer. $f = \frac{pd}{2t}$ for both shell and flue,

$f = \frac{100 \times 84}{2 \times \frac{1}{2}}$ or 8,400 lbs. per square inch in the shell; but as the

joint is 0·85 of the strength of the unhurt plate (see Art. 116), we may take the greatest stress in the plate at the joint as 8,400 ÷ ·85, or about 10,000 lb. per square inch.

$f = \frac{100 \times 33}{2 \times \frac{3}{8}}$ or 4,400 lbs. per square inch compressive stress in the flue. Such a boiler is usually only tested hydraulically to 150 lbs. per square inch.

120. The **flat parts of boilers** need staying. Figs. 151, 152, 163, 164 show the gusset plates and end to end stays in common

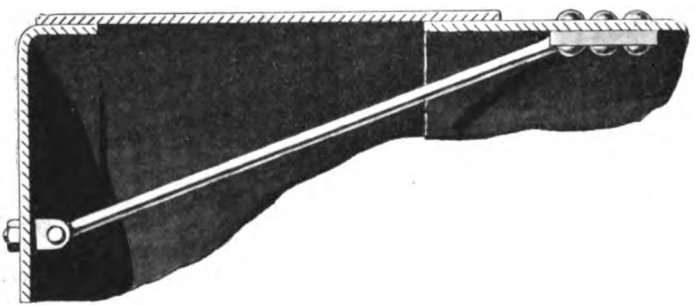

FIG. 188.—DIAGONAL STAY.

use. Fig. 188 is a diagonal stay which may take the place of a gusset. In flat parts near together, stud stays riveted or with nuts of the shapes shown in Fig. 189, are used. Thus in Fig. 202 copper is used in the 3-inch water space between a locomotive fire-box and its

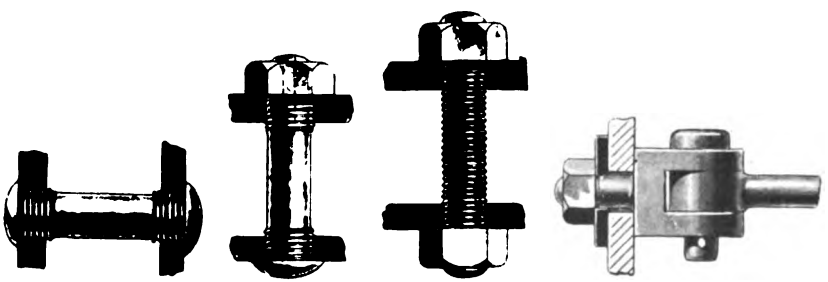

STUD STAY. STUD STAY. STUD STAY. END OF STAY-BAR.

FIG. 189.

shell, the stays, 4 inches apart, are screwed into the plates, the ends allowed to project $\frac{3}{8}$ inch and then riveted over. The end of a long stay bar may have a pin joint, as in Fig. 189. In multitubular boilers, stay-bars, as in Fig. 151, may be used in the steam space, but many of the tubes are screwed into the shell tube plate as in

Fig. 191. The ordinary tubes are merely expanded at their ends into the tube plates as in Fig. 192. Fig. 193 shows the Admiralty ferrule often used to protect the joint from the furnace flame. In Fig. 190, the fastening of a stay-tube is more elaborate, there being external and internal nuts.

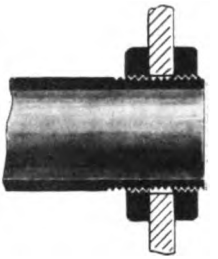

FIG. 190.—STAY-TUBE.

Fig. 194 shows one way in which numerous dog stays or girders support the flat top of the furnace of a locomotive, or of the combustion chamber of a marine boiler. They are also slung at their middles to the shell. This gives greater freedom for expansion of the top of the fire box before the shell gets heated. It is getting common to use another method, supporting the flat plate from steel

FIG. 191.—STAY-TUBE.

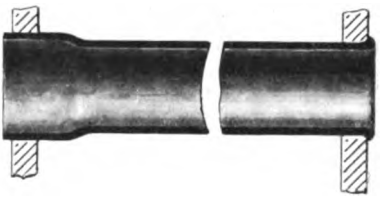

Fig. 192.—PLAIN TUBE.

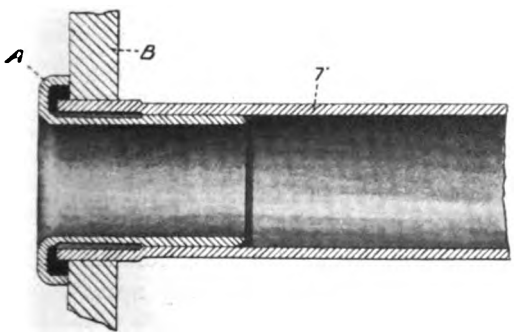

FIG. 193.—ADMIRALTY FERRULE.

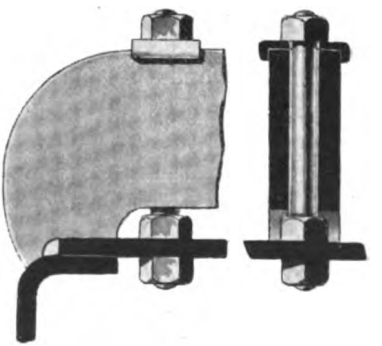

FIG. 194.—DOG OR GIRDER STAY.

T castings on the outer shell by means of numerous stay-bars. This allows better circulation of the water.

Flat Plates.

The theory of the strength of a flat plate has not yet been put in a simple form. It will be found in Thomson and Tait's *Natural Philosophy*. The results of the theory agree with such careful experiments as have been made.

(1) For a circular plate of thickness t and radius r, *supported* all round its edge with a normal load of p lb. per square inch, if f is the greatest stress in the material—

$$f = 5r^2p/6t^2.$$

(2) If the circular plate is *fixed* all round its edge

$$f = 2r^2p/3t^2.$$

(3) A square plate of side s fixed at the edges

$$f = s^2p/4t^2.$$

(4) A rectangular plate of length l and breadth b fixed round the edges

$$f = l^4b^2p/2t^2(l^4 + b^4).$$

(5) A round plate with a load W in the middle, supported at the edges

$$f = W/\pi t^2.$$

(6) For stays in square formation, distance asunder s, each stay has a load ps^2, and the greatest stress in the plate of thickness t is

$$f = 2s^2p/qt^2.$$

Lloyd's and other associations have formulated elaborate practical rules for the strength of curved and flat parts of boilers and stays, based on the formulæ I have given, Arts. 113-120. These will be found in the manuals written for boiler-makers.

121. Grooving and Corrosion.—Even zinc, if pure, in dilute sulphuric acid is not acted upon chemically. But if a piece of any other metal, such as copper, is also in the liquid and the metals touch anywhere, the zinc is acted upon rapidly. Two kinds of metal are needed as well as an electrolytic liquid, and the metals must touch, else corrosion will not take place. The better conductor the liquid is, and the more different in certain qualities the metals are, the more rapid is the action. One of the metals is almost entirely protected, the other being acted upon. Now in ordinary zinc there are impurities and physical differences, and consequently we have rapid corrosion when it is in an electrolytic liquid such as dilute sulphuric acid. When iron touches water, although the water may be very free from salts and therefore rather non-conducting electrically, yet in time we find corrosion, and especially near the water level.

Where the metal is sometimes wet, sometimes dry, very small surface differences in the metal are sufficient to allow of the formation of deep grooves due to corrosion. Probably the fretting of the surface of the metal, due to the plates being bent and unbent near the more rigid angle iron, in the breathing of the boiler, causes sufficient difference of surface to start the action. It is usual to make the inside surface of a boiler more uniform by sponging it all over with a weak solution of salammoniac. Hanging lumps of zinc inside a

boiler, either lying against the plates or attached metallically, very materially prevents corrosion of the iron, the zinc being eaten away. From 200 to 600 lbs. of zinc are sometimes consumed per annum in the boilers of a large vessel. Air free water produces much less corrosion. Vegetable and animal oils decompose in boilers and produce corrosion because of acidity.

It is because of this electro-chemical action that any trace of rancidity in lubricating oil does so much harm between brasses and journals. If water finds its way to the place where a gun-metal liner touches the steel of a propeller shaft, it causes rapid corrosion.

Making every part of a boiler more elastic greatly prevents such fretting of the metal anywhere as may lead to grooving and pitting. This is another reason why the spaces between flues, and flues and shell, ought to be as much as possible; it is for this reason that some makers prefer five to four gusset stays.

122. *Straining of a Boiler.*—Parts of a boiler are continually altering in temperature in different ways. Thus, in a Lancashire boiler, after the fire is lighted a flue "hogs," rising in the middle, or rather nearer the furnace, as much as $\frac{3}{8}''$ or $\frac{1}{2}''$, although it bulges out the flat ends, perhaps $\frac{1}{8}''$. It is well to leave a flue free to hog and not to try to restrain it with stays.

EXERCISE. A Lancashire boiler is 35 feet long, the flue has an average temperature of 500° F. when the shell is only at 100° F.; what would be the relative change in length if it were not prevented?

Answer. By Art. 171 a difference of 400 degrees produces a fractional change of length $400 \times \cdot000009$ or $0\cdot0036$ in iron, so that in 35 feet there is a difference of $35 \times 12 \times \cdot0036$ or $1\cdot5$ inches.

EXERCISE. To shorten an iron tube 35 feet long, by the amount of 1 inch, what must be the compressive stress?

Answer. The compressive strain is $1 \div (35 \times 12)$, and as Young's modulus of elasticity for iron is about 3×10^6, the compressive stress being 3×10^6 multiplied by the strain, the answer is $3 \times 10^6 \div (35 \times 12)$ or 7,140 lbs. per square inch.

EXERCISE. If the flue is 33 inches in diameter, $\frac{1}{2}$ inch thick; if the heat tends to make it $1\frac{1}{2}$ inches longer, and although it bulges out the ends of the boiler and hogs, it only gets $\frac{1}{2}$ inch longer, what is the total pushing force in the flue?

Answer. By last example the stress is 7,140 lbs. per square inch; the section of metal is $33\pi \times \frac{1}{2}$ or $51\cdot86$ square inches, so that the total push is 370,280 lbs. or 165 tons.

123. Boiler Accumulator. EXERCISE 1. A vessel contains w_1 lb. of water at 406° F. under a pressure of 265 lbs. per square inch. How much steam must be taken away (dry at 347° F. through a reducing valve) for the temperature to become 347° F., the pressure being 130 lbs. per square inch?

Answer. If w_1 lb. of water at 406° F. has as much energy as w_2 lb. of water, and x lb. of steam at 347° F. ($w_2 + x$ being equal to w_1), measuring heat from 347° F.

$$w_1(406 - 347) = x \times 869,$$

as 869 is the latent heat of steam at 347° F. Hence $x = \frac{59}{869} w_1$, or $14\frac{3}{4}$ lbs. of water falling from 406° F. to 347° F. will yield one pound of steam.

EXERCISE 2. If 20 lbs. of steam per hour at 130 lbs. per square inch will develop 1 horse-power, what is the storage capacity of a vessel, 30 feet long, 15 feet diameter, containing water at 265 lbs. per square inch, allowed to fall to 130 lbs. per square inch?

Answer. By the table, Art. 180, we see that 1 cubic foot of such water weighs 54 lbs., so that we have $\frac{\pi}{4} 15^2 \times 30 \times 54$, or 286,270 lbs. of water stored. Dividing by $14\frac{3}{4}$ we find that the supply of steam may be 19,470 lbs., dividing by 20 we get a supply of 973 horse-power-hours.

EXERCISE 3. An electric light station has many small steam engines, each coupled to a dynamo machine; some of these are stopped or started, as the load varies. They all take steam at 130 lbs. per square inch through reducing valves from a reservoir, and give out 1 electrical horse-power for 25 lbs. of steam. The reservoir contains water never higher than 406° F., never lower than 347° F., and this water is kept constantly circulating by means of a centrifugal pump between the reservoir and a number of boilers, using steadily half a ton of coal per hour. Three-fourths of the total heat of the coal is given to the water, which enters at 62° F., the coal being such that its total heat per pound is 15,000 heat units.

In 24 hours the water receives—

$$24 \times \tfrac{1}{2} \times 2240 \times 15{,}000 \times \tfrac{3}{4} \text{ or } 3 \times 10^{-8} \text{ heat units.}$$

A pound of steam at 347° F., the feed being at 62° F., needs 1,157 units, and hence if the engines had a perfectly constant load, they would give out $3 \times 10^8 \div (1{,}159 \times 25)$ horse-power-hours in the 24 hours, or 435 horse-power.

EXERCISE 4. Now suppose that there is such a load factor that there is a maximum supply at the rate of 1,740 electrical horse-power, and in fact that for eight successive hours the power given out is greater than 435, the average of the excess power being 510, so that in fact there must be a store of 510×8, or 4,080 horse-power-hours. In this rough calculation we may neglect the fact that the steam if taken away at a higher pressure through a reducing valve, is probably superheated instead of being just dry as assumed above, and we may assume that for every $14\frac{3}{4}$ lbs. of water stored we can produce 1 lb. of steam, or for every $25 \times 14\frac{3}{4}$ or $367\frac{1}{2}$ lbs. of water stored we can produce 1 electrical horse-power-hour. We therefore need to store $4{,}080 \times 367\frac{1}{2}$, or $1{\cdot}50 \times 10^6$ lb. of water at 406° F. At this temperature a cubic foot of water weighs 54 lbs., and therefore we need a reservoir of 27,200 cubic feet, neglecting the volume of the heated tubes. This reservoir if cylindric might consist of four cylinders, 40 feet high and 15 feet in diameter. The cost of such a reservoir with the necessary brickwork, &c., would probably be £2,400. Assuming interest, maintenance, depreciation, rent, &c., as 10 per cent. on the cost, we find £240 per year.

CHAPTER XIII.

HEATING ARRANGEMENTS OF BOILERS.

124. THE fireplace, 6 feet long, Fig. 151, consists of a front dead plate and sets of fire bars resting on wrought iron or steel bearers, and the support of the fire-brick bridge *B* riveted across the flue. Notice the spaces between the bars, Fig. 154, to allow of air entering from the ashpit. The door is double or sometimes treble with air between, so that the outer part may remain cool. **The clever stoker** knows that it is by regulating the air coming through the ventilators in the door, as well as by the ashpit, that he may obtain perfect combustion and no smoke, even with the most bituminous coals. The careless stoker can only obtain good combustion with Welsh coals. With good stoking the same results are obtained with Newcastle or Cheshire coals as with Welsh. Here is the best method with non-Welsh coals. Suppose fresh coal is needed, the red-hot stuff is pushed forward till it is thicker near the bridge; the fresh coal is put on near the dead plate and the door closed, air coming in. The coal begins to coke (this is called the *coking* system, and is better than the *spreading* system of feeding a furnace, except for very small coal); it gives off its gaseous hydrocarbons, which, passing over the white-hot part and also by meeting the hot air which has come from the ashpit through the grate, and also by its own combustion, reaches a high temperature. Now **for perfect combustion** of the gases we have merely to recollect that

1. There must be at least a sufficient quantity of air.
2. The air and gases must be well mixed.
3. The mixture must be at a high temperature.

If any of these conditions is not fulfilled there is an escape of unburnt gases. If these unburnt gases are hydrocarbons and if they are suddenly cooled, they become decomposed and form smoke

or soot. Impinging on a cold solid surface, some of these hydrocarbons deposit a very hard kind of soot difficult to remove.

In the Lancashire boiler we depend upon the mixing that goes on above and behind the fire bridge as well as above the fire, and this is why we call the space behind the bridge a combustion chamber. It is fatal to good economy to attempt to cool the gases much until they are well mixed, and in Fig. 151 the first Galloway tube is perhaps too close to the bridge. And yet although it cools the gases, it also helps to mix them. More space is needed for more **bituminous coal.**

We do not like to rely altogether upon the air coming up through the grate, and it is necessary to think a little about what happens to such air. Suppose air to come up through a thick mass of white hot coke; first its oxygen combines with carbon to form carbonic acid CO_2; later this carbonic acid dissociates into carbonic oxide CO and oxygen; this oxygen again takes up carbon to form more carbonic acid. If the fuel is thick enough no doubt there are more changes—but the result is this, that escaping from the top of the coke, we have carbonic oxide and carbonic acid and the nitrogen of the air. Students must have seen such CO burning with a blue flame over a thick coke fire. That such carbonic oxide may not go off unconsumed, **air** must be admitted **by the door.** Now in the Lancashire boiler we do not like thin fires, but even when thickest much of the oxygen which comes through the grate will probably not form either CO or CO_2, and air through the fire door is not so necessary (although we always take care to open the ventilator of the door about a minute after a fresh firing) as it is in the locomotive and other boilers using thick fires. In these there is probably little free oxygen after passage through the fire; hence both for the sake of the CO and also of the hydrocarbons, air must be admitted through the door. The space above the grate in a locomotive is the only combustion chamber, and it ought to be large. In some cases of Lancashire and marine boilers, advantage is found in admitting air through passages behind the fire bridge.

In chimney draught, or when jets of steam produce draught in the uptake of locomotives or marine boilers, the entering air can only be heated by the inner part of the hot fire door or the hot ashpit, but when the forced draught consists in blowing air in through orifices above the grate and also into the ashpit, fire door and ashpit door being well closed, it is possible to heat this air by the gases in the uptake as it comes through pipes. In this case very perfect combustion is obtainable. Note that in no case can a stoker, however careful, obtain good combustion unless he can command

just **as much draught as is necessary.** With chimney draught he performs his regulation by lifting or lowering the damper, which is hung from a chain passing over pulleys to the balance weight, which is within easy reach of the stoker.

The opening of the fire door admits too much cold air (usually checked by the damper beforehand), and yet it is certain that frequent small supplies of coal are far better than infrequent large supplies. Indeed, the feeding of the fire ought to be continuous, and the conditions of draught, &c., ought to keep constant. Hence for the most perfect combustion we depend upon mechanical stoking, which keeps admitting fresh fuel all the time, the coal as it gets coked and more and more burnt, finding its way towards the bridge, where the ash and clinker drop. Indeed, in small boilers of great power it is almost absolutely necessary that all the operations, feeding with water and fuel, and regulating draught, &c., should be automatically and continuously performed.

125. The combustion chamber is filled with white hot flame, and as the gases travel towards *A* they give up most of their heat to the boiler. Usually about half the total heat given to the boiler is given up by **radiation from the fire** and the hot gases in the furnace and combustion chamber of a Lancashire boiler. The rest of the heating surface seems to take up heat by mere contact with the hot gases, and hence it is that the Galloway tubes prove to be useful, because the gases strike upon them and the eddying and mixing motion causes a continual renewal of hot gases near the metal, and the water circulates easily through the tubes. The seatings of six boilers are shown in Fig. 196. A fire-brick wall makes the stuff pass down and underneath the bottom nearly to the front of each boiler; there it divides into two streams, passing up and along the sides of the boiler by passages, which unite again in the passage going to the chimney. An iron door or damper passes usually down through a slit, supported by a chain going over pulleys to the front of the boiler, where there is a counterweight. The boiler rests on the seating blocks of fire-brick, made of special shape. Some men let the gases pass along the side flues before the bottom, and it may be more economical, but the other is on the whole better because there is less unequal heating of the boiler. What the actual temperatures are, everywhere, I do not know, for although I know of many published measurements, I know of none yet made with accurate instruments.

EXERCISE. If half the heat of fuel is radiated in the furnace, and the other half is carried off by gases. If the gases are 20 lbs. per

pound of fuel, and the calorific power of the fuel is 14,500 Fah. units; neglecting the fact that there is vapour present, and that there is almost certainly dissociation, find the temperature of the gases leaving the furnace if their specific heat is 0·24.

Answer. 7,250 ÷ (20 × ·24) or 1,510 Fah. degrees above ordinary temperature.

It is said that thick copper wire lying on the brightest fuel in any boiler furnace does not melt. Probably therefore the temperature never reaches the melting point of copper. Copper wire will of course rapidly disappear, because of oxidation, &c. The temperature near the chimney is often about that of melting lead. There is no doubt a great advantage in letting the two flues unite in one, just behind the fire bridge, as in the usual hand firing, if the furnaces are fired alternately, the mixing is most conducive to good combustion. The best large stationary boiler known to me is shown in Fig. 196, and may be called **a multitubular boiler.** Here when the mixing of the gases has occurred in *C C*, they pass through a great number of tubes, which take away their heat far more rapidly than it is taken in any Lancashire boiler, than which this occupies less space for the same power. Space must, however, be left behind *A* for the cleaning of the tubes. The best results are obtained with two furnaces meeting in the combustion chamber *C C*, fired alternately.

An economiser (Figs. 195 or 197) or **feed-water heater** consists of a number of vertical iron pipes (sixty for a single boiler with three-quarters of the heating surface of the boiler, say 600 square feet), through which the feed-water passes, their sooty outsides are kept constantly scraped, and they are placed in the passage between the boiler and the chimney. It is found that the use of an economiser adds from 10 to 15 per cent. to the amount of steam evaporated by a Lancashire boiler. Water may be raised to 240° F. It causes great gain in economy, and lessens the straining of the boiler, due to local cooling. It does not benefit a multitubular boiler so much, because the flues of this boiler are already very efficient. In this, as in many other cases, the extra contrivance, such as a feed-water heater, owes its value to the uneconomical nature of the contrivances which it supplements.

As much as 33 per cent. better results are obtained over the ordinary hand-stoking by the use of **mechanical stokers,** but it is only in the case of steady loads on engines, and therefore on boilers, that they are used. Vicar's stoker has a hopper, which has to be filled with fuel, and the fuel falls into small boxes; a slowly rotating shaft drives plungers forcing coal from the boxes on to the dead

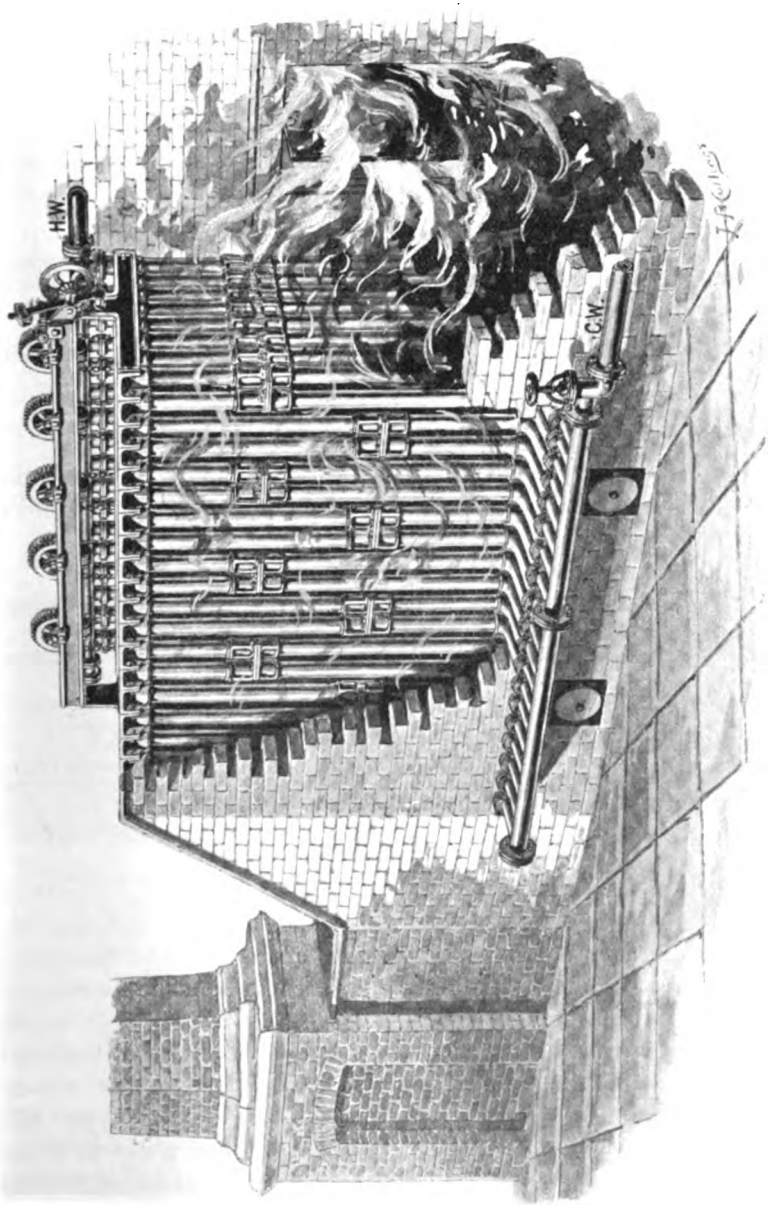

FIG. 135.—ECONOMISER OR FEED-WATER HEATER

plate, and also gives a reciprocating motion to the fire bars, so that the coal is carried towards the bridge, where it falls into the ashpit. Henderson's form breaks up the coal coming from the hopper; it falls on fans, which spread it on the bars. Half the bars rise and fall, the others have a reciprocating horizontal motion.

EXERCISE. A Lancashire boiler 27 feet long, 7 feet diameter, shell $\frac{7}{16}$th of an inch thick, flues 33 inches diameter, $\frac{3}{8}$ of an inch thick, ends $\frac{5}{8}$ of an inch thick, what is its approximate weight?

Answer. Neglecting, overlapping, &c.

Each end $\{84^2 - 2(33)^2\} \times \cdot7854 \times \frac{5}{8}$ or 2,393 cubic inches of metal, or 4,790 for both.

$$\text{Shell } 84\pi \times 27 \times 12 \times \frac{7}{16} = 37{,}400 \text{ cubic inches.}$$

$$\text{Flues } 2 \times 33\pi \times \frac{3}{8} \times 27 \times 12 \text{ or } 25{,}200 \text{ cubic inches.}$$

Total 67,400 cubic inches, and taking ·28 lbs. to the cubic inch, the weight is 18,760 lbs., or 8·43 tons. Now the actual weight will

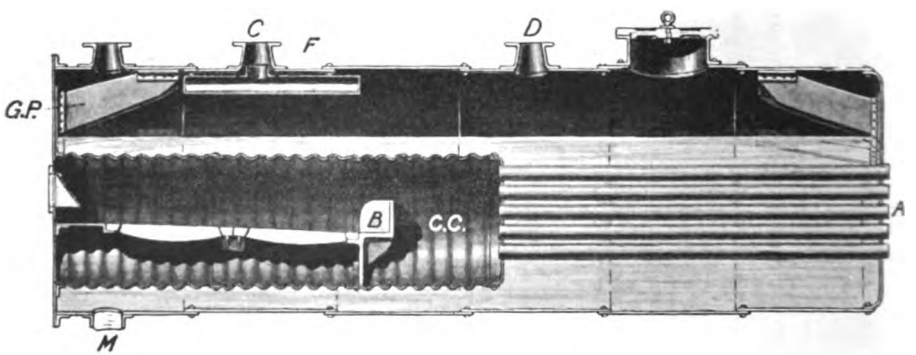

FIG. 196.—MULTITUBULAR BOILER (STATIONARY).

be about 12 tons, together with $3\frac{1}{2}$ tons of fittings, and this gives a fairly correct notion of the usual allowance to be made for flanges, angle irons, &c., in rough calculations.

If the student will make measurements he will find that the total heating surface on the external shell is about 370 square feet; flues, 450 square feet + water tubes 30 square feet; altogether say 870 square feet; economizer say 600 square feet. The grate is about 33 square feet in area, so that there is 26 square feet of heating surface (with economizer 45) per square foot of grate.

Such a boiler will usually burn 12 to 18 tons of coal per week of 54 hours, or 15 to 22 lbs. of coal per hour per square foot of grate (a

fairly thick fire) without much smoke, if the coal is admitted a little at a time, either sprinkled all over or alternately at the sides, or only on the dead plate, a little air being always admitted through the doors after firing. The common sort of result obtained is to have $2\frac{1}{2}$ tons water evaporated per hour.

EXERCISE. It is usual to obtain in ordinary practice with good firing $10\frac{1}{2}$ lbs. of water evaporated (as if from and at 212° F.) per pound of coal if an economiser is used; what is the usual evaporation

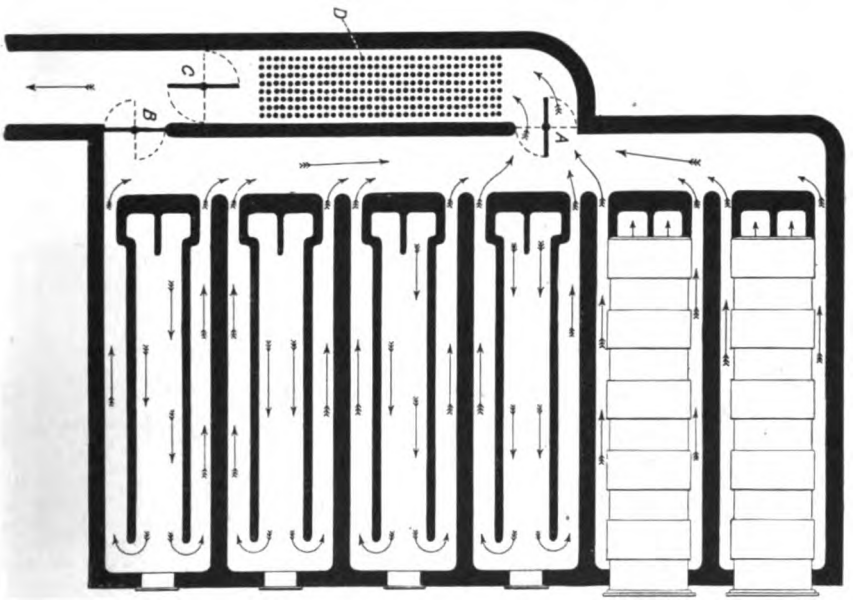

FIG. 197.—SEATING FOR SIX LANCASHIRE BOILERS.
Showing economiser D. The gases may go by A through the economiser D, or else by B.

of the above boiler per hour? And how much is it per square foot of grate? How much is it per square foot of heating surface?

Answer. 3,966 or 5,950 lbs.; 120 to 180 lbs.; 4·6 to 2·77 lbs., not counting economiser surface; 2·7 to 4 lbs., counting economiser surface.

EXERCISE. If for 25 lbs. of evaporation we obtain 1 indicated horse-power, what is the average indicated horse-power corresponding to the boiler power?

Answer. If we take 5,000 lbs. per hour as the average evaporation, this means about 200 indicated horse-power.

With a range of Lancashire boilers we usually assume about 20 indicated horse-power per foot of boiler frontage, including brick-work or 16 with Cornish boilers.

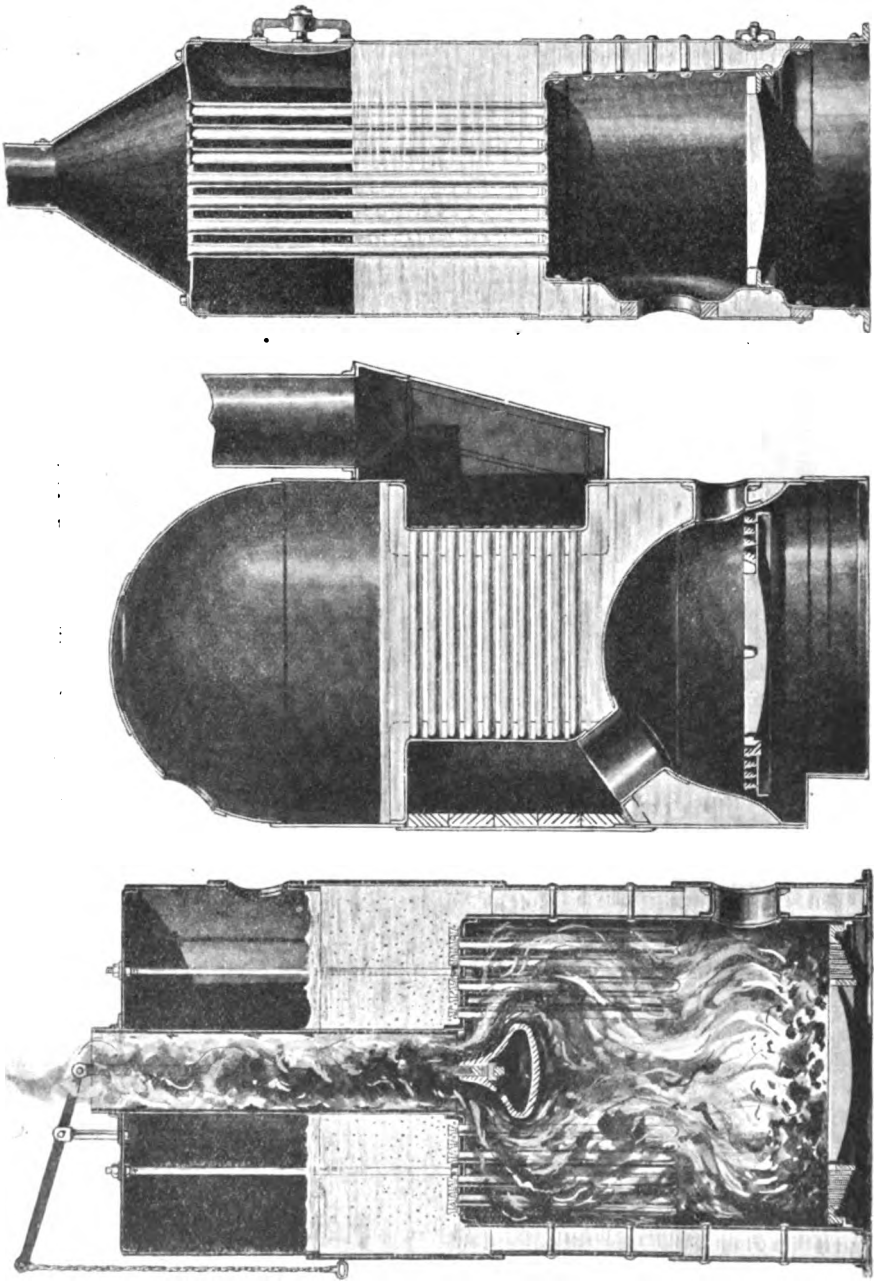

FIG. 198.

FIG. 199.

SPECIMENS OF VERTICAL BOILERS.

FIG. 200.

CHAPTER XIV.

BOILERS (*continued*).

126. THE **vertical boilers** shown in Figs. 198–200 are easy to understand. Fig. 201 shows a "Field" water-tube which projects downwards into a fireplace, and is surrounded by flame. A vertical tube closed at the end with water in it, surrounded by flame, will get nearly red hot and then suddenly much of the water becomes steam explosively. The interior tube allows the most rapid circulation to take place, and these field tubes are quite wonderful for quick evaporation.

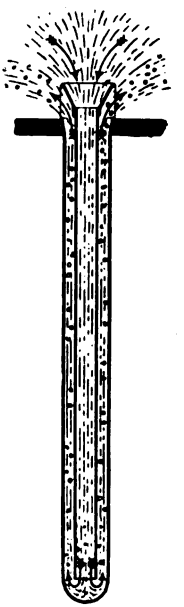

FIG. 201.—FIELD TUBE.

In the **locomotive boiler** the usual pressures are 130 to 200 lbs. per square inch absolute. Fig. 202 shows the fire box, whose top and sides (usually copper $\frac{1}{2}$ inch thick) are in one piece, the tube plate TP, $\frac{7}{8}$ inch thick and the back fire box plate BFP being connected by flanges to the rest. It is enclosed by its $\frac{1}{2}$ inch steel casing which has a shoulder plate joining it to the steel $\frac{1}{2}$ inch barrel formed of three iron or steel plates called the back, the middle, and the front plate. The front plate is fastened to the $\frac{3}{4}$ inch smoke box tube plate STP by a circular angle iron. About 200, $1\frac{1}{2}$ to $1\frac{7}{8}$ inch (10 W. G. thick) brass flue tubes convey the hot gases from furnace to smoke box SB and the chimney. Rivets usually $\frac{3}{4}$ inch. Circular joints often lap but sometimes butt. The straight joints always butt with two covering plates.

The holes in both the tube plates are larger than the tubes, which are passed through from the smoke box end of the barrel and then expanded and made steam tight with a tube expander, ferrules being

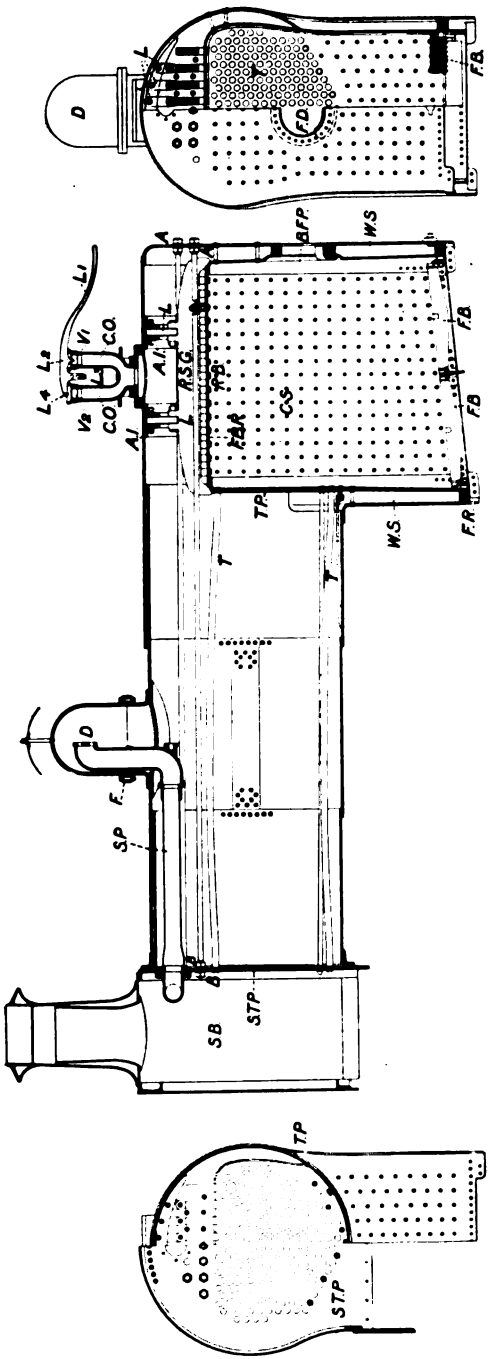

FIG. 202.—LOCOMOTIVE BOILER.

No manhole in bottom of barrel in this specimen. About a dozen 1¼ inch mud holes are made in the shell, with brass plugs. Bituminous coal in burning needs more space above the fuel. A fire-brick arch allows better mixing of gases, and prevents solid particles entering the tubes. Usually the bottom tubes have too little draught. Small tubes much more efficient, but apt to get choked. Tubes wear greatly by attrition of small cinders and coal.

put on at the fire box ends. The tubes act also as stays. Only the top and bottom rows of tubes are shown in Fig. 202; *C S* are copper stays through the water space *W S* all round the fire box. Notice the longitudinal stays also, their ends at *A* and *B* screwed into the plates. The top of the fire box is shown with many copper screws from the wrought iron dog stays *R S G* which are hung by one or two rows of links *L* to angle irons on the inside of the fire box shell. Sometimes roofing stay bolts, each from shell to fire box, are used instead of girder stays, and they give better water circulation. The dome is of steel, its steel flange or fitting *F* riveted

on. Notice the shapes of the fire bars and how they are carried by bolts through the foundation ring *FR*. The air space is from $\frac{1}{3}$ to $\frac{1}{4}$ of the whole grate area. A wrought iron rectangular ashpan is bolted to *FR*. It has a damper in front (sometimes one at the back also), a hinged door worked by a notched rod from the foot plate. There is usually a fire brick arch nearly across the fire box to deflect the flame and so mix the gases better. It was the use of this brick arch which first enabled coal to be burnt instead of coke in locomotives. There is also usually a deflector plate inside the fire hole to deflect the cold air downwards when the door opens. As this obstructs radiation it is not so good as having a door opening inwards which itself acts as a deflector plate.

The regulator for admitting steam through the steampipe *S P* to the valve chest is shown in Fig. 64.

The heating surface of a locomotive is usually 750 times the area of one of the pistons; the grate area is usually 10 times the area of one of the pistons. The tube heating surface is usually 10 times the heating surface of the fire box.

EXERCISE. One piston 16 inches diameter, what is its area? What is the customary total heating surface, tube surface, &c.?

Answer. Piston 201 square inches; grate 14 square feet; heating 1,047; tube surface 951; fire box heating surface 95. If the tubes are $1\frac{1}{2}$ inches in diameter inside and 10 feet long how many of them are there?

Answer. Each tube has an area of 3·93 square feet, so that there are about 265 of them.

High **cylindric marine boilers** are from 11 to 17 feet in diameter, and are either double or single ended. Fig. 203 is single ended, 9 to 10 feet long, and Fig. 205–6 is double ended, 17 to 18 feet long, being like two single-ended boilers set back to back. There is greater economy of weight and space and heat radiation. In men-of-war there may be an advantage in having more boilers quite distinct.

Fig. 205 is one of four marine boilers. The shell is cylindric with corrugated furnaces. The straight joints are treble riveted butt, with two covering plates, breaking joints. The ring joints are double riveted lap. Usually there are two or three combustion chambers, not always the same in number as the furnaces. The uptakes meet at the base of the funnel, with a damper in each; indeed there is usually a damper for each combustion chamber for greater ease in cleaning the separate furnaces. The furnaces are from 36 to 45 inches in diameter, 78 inches long, grate 6 to 7 feet long in two or three lengths of steel fire bars (Fig. 206). There is always an ash tray because of the

corrugations in the furnaces, and it is usual to keep a little water in it. The furnace tubes are kept 4 to 5 inches apart both at heights and hollows of the corrugations. The ends flanged are $\frac{3}{4}$ to $\frac{7}{8}$ inch thick. The front one is in three pieces. The central piece is the front tube plate; the lower, flanged out at the holes, carries the furnaces. The combustion chambers are of flat plates curved and flanged $\frac{1}{2}$ to $\frac{9}{16}$ inch thick, well stayed.

The tubes are still sometimes of brass but almost always of drawn steel $\frac{1}{8}$ inch thick, $2\frac{1}{4}$ to 3 inches internal diameter. They are a good fit for the holes in the tube plates and a tube expander is

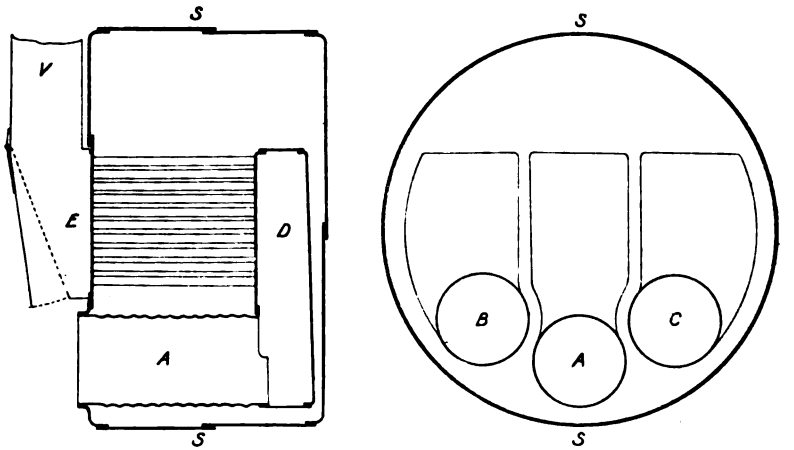

FIG. 203.—SINGLE ENDED MARINE BOILER, THREE FURNACES, THREE COMBUSTION CHAMBERS.

used. The holes are a little larger at the smoke box end to facilitate insertion and withdrawal. The tubes are usually about 1 inch apart on their outsides. Notice the large number of tubes that are stay tubes marked blacker than the rest in Fig. 205. (Many people object altogether to the use of stay tubes, which indeed are seldom used in locomotives.) The Servé tube has internal ribs for the better abstraction of heat; it is of twice the usual weight and cannot be more efficient than a small tube with great draught.

Notice the end to end stay bars 2 or $2\frac{1}{4}$ inches diameter, the holes in the plates not screwed.

Already there are single-ended boilers of 13 feet diameter, whose cylindric part is $1\frac{5}{8}$ inches thick 10 feet long, in two plates each 11 feet broad, with one welded joint; the other joint, being welded at its end parts only, the rest of it treble riveted. The flanges are internal and on the cylindric part, each of the end plates being in one piece.

It is difficult to convey larger plates than these by rail. Very large flanging and welding machinery has thus given great simplicity and strength of construction.

EXERCISE. A marine boiler shell is 16 feet 3 inches diameter, $1\frac{1}{2}$ inches thick ($1\frac{1}{2}$ inches thickness has been exceeded in the mercantile marine), for a working gauge pressure of 170 lbs. The furnaces are 43 inches diameter and $\frac{5}{8}$ inch thick. Neglecting the increase in *effective*

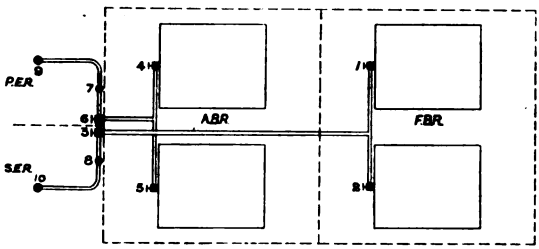

FIG. 204.—MARINE ENGINE STEAM PIPES.

thickness due to the corrugations, what are the working stresses? *Answer.* Shell $f = \frac{195 \times 170}{2 \times 1\frac{1}{2}} = 11{,}050$, and as the joint is $\frac{1{\cdot}08 \times 5}{5 + 1{\cdot}45}$, or ·837 of the strength of the unhurt plate, the answer is 11,050 ÷ ·837, or 6 tons per square inch tensile stress in the joints of the shell.

In the furnace tube $f = \frac{43 \times 170}{2 \times \frac{5}{8}}$, or 5,848 lbs. per square inch.

The working and test pressures of a marine boiler are usually engraved on a brass plate fixed to the front of the boiler. It is usual to provide two Bourdon pressure gauges; one scale goes to 15 or 20 lbs. above the working pressure, the other to the highest pressure used in testing the boiler hydraulically.

To show the general nature of the **steam pipe connections** in the Navy, in Fig. 204, the dotted lines are bulkheads, and I assume that there are four double-ended boilers and twin screw engines; 1 and 2 are the stop valves of the boiler in the forward boiler room *F B R*, giving steam to their main pipe, which goes to the starboard engine-room bulkhead stop valve 3. The stop valves 4 and 5 in the after boiler room *A B R* give steam to their main, which goes to the port engine-room bulkhead stop valve 6. There is a thwart-ship main pipe on which are the stop valves 3 and 6 just mentioned; also valves 7 and 8 (to shut off either engine) which may be closed either by hand in the engine-room or from outside; and the regulator valves of the engines 9 and 10. Seven and 8 are held open against the pressure,

so that they may be easily closed, and small pass valves are provided to ease their opening. Sometimes there is another valve provided between 3 and 6.

It is most important that the **water level** should be kept right in all the boilers. There is ample feeding power, and on an emergency all the feed may be given to one boiler; and we provide

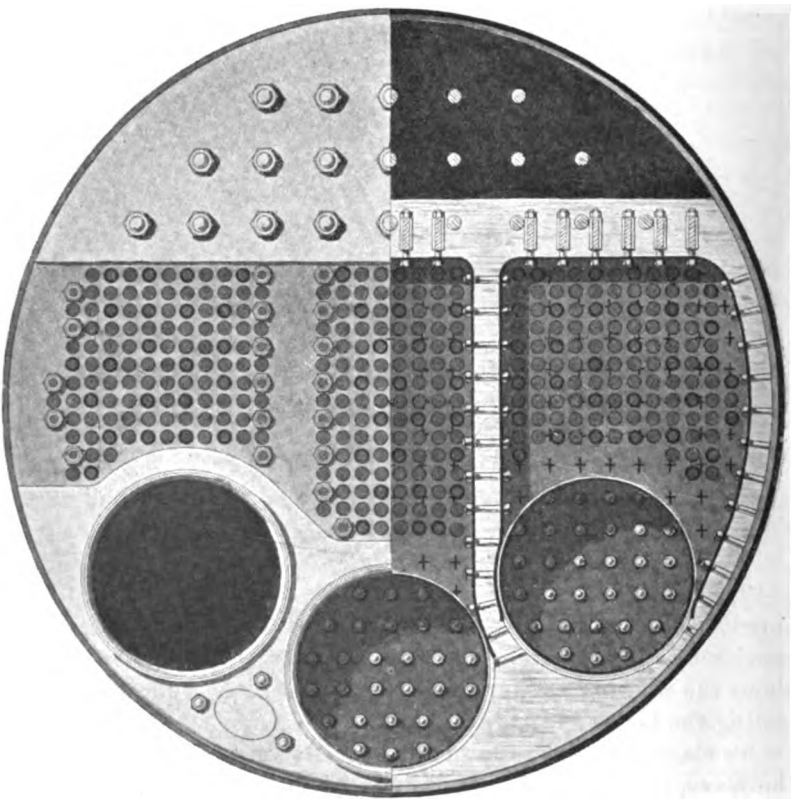

FIG. 205.—DOUBLE-ENDED MARINE BOILER.

that there may be a great increase in the speed of the main feed pump, and besides this there is an auxiliary feed pump also. If, in spite of this, the water level gets lower, the stop valve must be closed, the safety valve opened, and the fires drawn.

Unless there is time given to prepare so that there may be a good reserve of steam by throttling, &c., it is difficult to maintain constant pressure when the speed of the ship alters. It is possible now to blow off without noise by the *silent blow off* or stop valve on

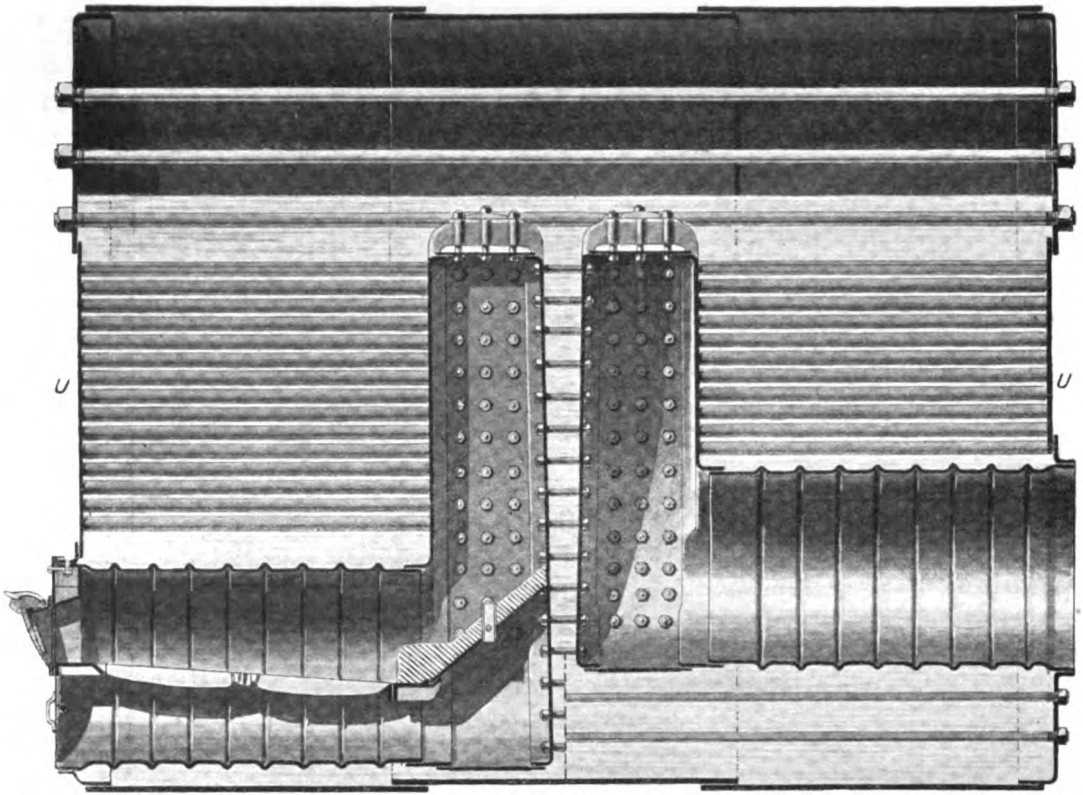

FIG. 205.—DOUBLE-ENDED MARINE BOILER.

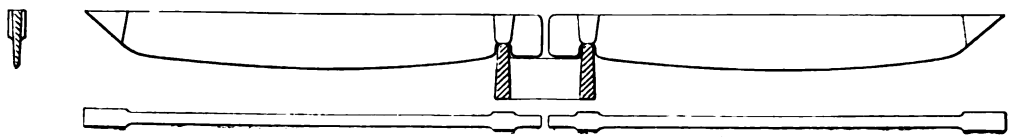

FIG. 206.—MARINE BOILER FIRE BARS.

Apt to get too hot, so that they sag, bend, or melt. They ought to be often taken out and put back again in another order. New bars ought to be placed at the back.

the main steam pipe, which lets steam directly into the condensers, thus saving feed-water. Care must be taken in doing this gradually so as not to damage the condenser tubes.

It is a good exercise for students starting at the feed tank to describe **how the water stuff travels** in a marine engine. Feed tank at 100° F.—feed pump suction pipe, suction valve; increased pressure, delivery valve with branch to boiler-feed valve, feed pipe inside boiler. Great heat received through heating surface from furnace and flues; becomes steam at 370° F. and 170 lbs. pressure, passes through stop valve nearly dry, main steam pipe, bulkhead valve, stop valve, regulating valve getting a little wet; valve chest of H.P. engine; H.P. cylinder, condensing on entrance a good deal, doing work on piston, expanding and evaporating a little, exhaust at larger volume and smaller pressure, and evaporating all that was condensed as it passes into first receiver, valve chest of intermediate cylinder condensing as it enters doing work on piston, expanding and evaporating a little; exhaust at larger volume and smaller pressure and evaporating all that was condensed as it passes into second receiver—valve chest of L.P. cylinder, condensing on entrance to L.P. cylinder, doing work on piston, expanding and evaporating a little, exhaust at larger volume and smaller pressure, evaporating all that was condensed at first as it passes by exhaust pipe to condenser,—suction pipe, foot, bucket and delivery valve—discharge pipe to feed tank.

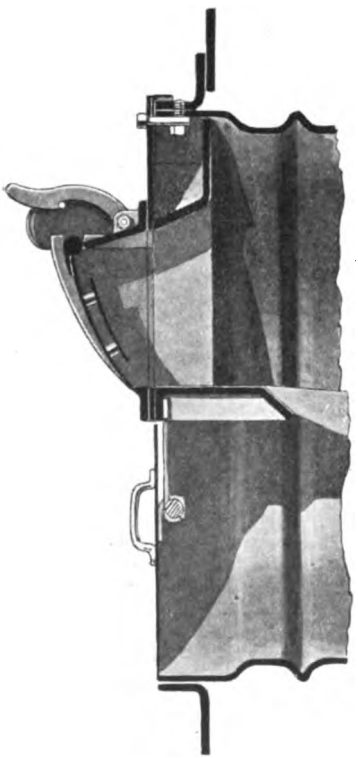

FIG. 207.—MARINE BOILER FIRE DOOR.

All the sulphate of lime coming in with feed-water is insoluble at 290° F. and **deposits** as a close-fitting scale. Common salt is soluble and magnesium sulphate although insoluble falls as a soft deposit. Besides it is removable, as carbonate of lime is removable (by previous boiling). Sea water contains $3\frac{1}{2}$ lbs. of sulphate of lime per ton.

EXERCISE. Engines of 12,000 I.H.P. use 17 lbs. of steam per hour per horse-power; what is the weight of feed-water per day?

Answer. $\frac{12{,}000 \times 17 \times 24}{2{,}240}$, or 2,186 tons.

Suppose the feed-water to have 5 per cent. of sea water per cycle added to it because of leakage, what is the amount of deposit of sulphate of lime in the boilers per day? *Answer.* Each ton of feed deposits ·175 lb., or there is a total deposit of 383 lbs. per day.

If the total heating surface is 50,000 square feet, and if the sulphate of lime is deposited uniformly over it, and if its specific gravity is 2·6, what thickness will be deposited in three months?

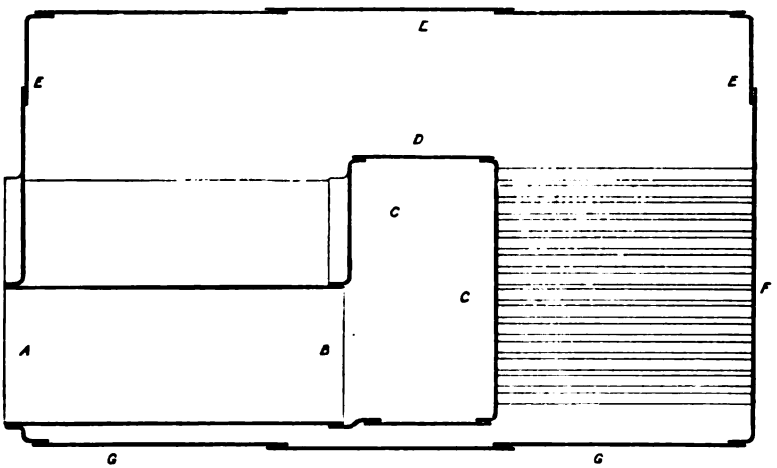

FIG. 208.—LOW CYLINDRIC MARINE BOILER.

Answer. The volume per day is $383 \div (62{\cdot}3 \times 2{\cdot}6)$ or 2·364 cubic feet; thickness in feet per day, $2{\cdot}364 \div 50{,}000$, and thickness in inches in 91 days is ·0516 or a little more than $\frac{1}{20}$th of an inch.

Fig. 208 is a low form of cylindric marine boiler, (7 to 9 feet diameter with two furnaces, 10 feet with three furnaces, 17 to 18 feet long,) seldom employed except in small vessels. The stay bars from the combustion chamber to the shell, *D* to *E*, make the interior less accessible. The heating surface is about 30 times the grate. About 23 lbs. of coal are used per hour per square foot of grate, or 26 if the natural draught is helped. The weight of boiler, including water, is from 1 to $1\frac{1}{3}$ cwts. per indicated horse-power.

Water tube boilers are mostly used in cases where space is

limited, as in ships, electric light and other stations in cities. They are now used in the very largest ships. They give the same heating surface with less weight both of boiler and of water contained by it; the pressures are high and safety great; their weight per horse-power is about 40 lbs. as against 130 lbs. in cylindric boilers. There are no other boilers capable of producing so much steam per hour which have so **little reserve power**; and it almost seems as if we were nearing the time when boilers will only contain as much water as will supply their engines with steam for a few seconds. At present steam is raised in them in twenty to thirty minutes without undue straining. These boilers are almost all now fitted with floats which open equilibrium feed valves automatically, to keep the water level nearly constant. The arrangements must be very frictionless. In considering gauge glasses, &c., it is to be remembered that there are considerable differences of pressures between different parts of these boilers. Hence, when evaporation stops in the *non-drowned* types the water level falls. Impure water is specially troublesome. A reducing valve is often relied upon to steady and dry the supply from these boilers.

In ordinary boilers there would be a very much more rapid generation of steam if centrifugal pumps or other **stirring arrangements** were worked inside. The water tube boiler gives probably the very best circulation that we are likely to see due to mere natural changes of density produced by heat. This matter has become much more important since the use of surface condensers has caused boiler water to be greatly free from air. (See Art. 354.)

These boilers are seen at their worst when supplied with unsuitable water. In towns they are supplied with fresh water continually, when supplying non-condensing engines. This water is passed through a feed-water heater, called a **water purifier**, arranged so as to be easily cleaned of sediment.

All town water has from 10 to 100 grains of solid matter per gallon.

EXERCISE. Engine of 100 indicated horse-power using 20 lbs. of water per hour per horse-power. How much solid matter is deposited by the water per month (10 hours per day)? *Answer.* 50 to 500 lbs.

Filters are used to remove the mud, or sometimes mere settlement suffices. As for the salts: the carbonates of lime and magnesia are only soluble if carbonic acid is present, so that if this is removed, either by boiling or by the addition of lime-water or soda the salts are deposited. As for the sulphates of lime and magnesia at a very

high temperature they are insoluble and will **deposit**. But the addition of carbonate of lime will also cause them to deposit as a white powder, which may be removed by filtering.

Mr. Thornycroft was probably the first to introduce the water tube boiler with rapid circulation of the water in small tubes, the flame and hot gases playing round their outsides. The water in his small curved pipes is partly water, partly steam; the mixed mass rises rapidly, being very light compared with the more compact mass of water in his down-comer pipes. In this way the water is always circulating in a way which has been examined through thick glass ends on his top horizontal steam chamber, and he has measured the amount of water circulating by means of a gauge notch inside. The ends of the small tubes could be seen spurting out water intermittently, and there is a complete circulation of 105 lbs. of water for every 1 lb. of steam generated. There is still some discussion as to the relative values of the **Thornycroft system**—tubes opening above water line—and the drowned tube system. Thornycroft claims greater safety, more certain and more rapid circulation, better working with bad water and better efficiency, and more power for the weight. The curved tubes bend easily without straining the boiler.

In one form of Thornycroft boiler the furnace fuel does not radiate heat directly to the water tubes: the furnace has a firebrick covering: the products of combustion are well mixed before they are admitted to the tube space.

In the **Yarrow** boiler, Fig. 211, the tubes are straight, they enter the steam-chamber below the water level. In the Belleville boiler the 4 inch or 5 inch tubes are straight, joined to elbow pieces or junction boxes by screwed joints, making zig-zag paths of small slope from a low small water chamber to an upper steam chamber over an ordinary grate. All is enclosed, except the steam-chamber. The feed admitted to the steam-chamber mixes there with rising water, and both descend through a non-return valve to a quiet sediment collector before being used. The sediment is blown out periodically. Some lime put into the feed tank causes the oil to deposit also.[1] The tubes may be examined by opening doors on the front; there is an automatic feed control, a float in a stand pipe controlling the feed regulation valve.

The **Babcock and Wilcox,** Fig. 212, is much employed in electric light stations.

EXERCISE.—If the proper working pressure for a tube 16 feet

[1] These boilers are particularly affected by a list of the vessel to one side.

diameter and $1\frac{1}{2}$ inches thick, weakened by no joint, is 200 lbs. per square inch (above atmos.), what is the proper working pressure for a tube 1 inch diameter $\frac{1}{16}$ inch thick of the same material?

Answer. 1,600 lbs. per square inch.

EXERCISE. A vertical pipe of length l, has many thin copper tubes lying inside it, nearly touching; water is driven through the space round the tubes, along the pipe, at the velocity v_1; hot gases from a furnace are driven through the tubes in the opposite direction at the velocity of v_2. If the heat given to the water is proportional to $l\sqrt{\frac{v_1 v_2}{m_1 m_2}}$, where m_1 and m_2 are the hydraulic mean depths of the gas and water spaces, prove that (if the thicknesses of the tubes are proportional to their diameters) if the diameters of the tubes and pipe are halved, keeping the same number of tubes and same arrangement of them, and if the same quantities of water and gas are drawn through, the amount of heat given up is the same, if the length is only one-eighth of what it was before.

For if d is the diameter of a tube, m_1 is proportional to d, so that m_1 is halved; also it is easy to see that m_2 is halved; also the velocities are inversely proportional to the areas, so that v_1 is four times as great, and so is v_2. If x is the new length, then

$$x\sqrt{\frac{4v_1,\ 4v_2}{\frac{1}{2}m_1,\ \frac{1}{2}m_2}} = l \quad \sqrt{\frac{v_1 v_2}{m_1 m_2}},\ \text{or}\ x\sqrt{64} = l,\ \text{or}\ x = \frac{1}{8}l.$$

I have no proof that the above rule truly holds, but I have no doubt that some such rule holds. If it does, the application of it ought to lead to great reforms in boiler construction. See Chap. XXXIII.

127. Draught. If students work the following exercises they will possess the small amount of knowledge that seems in anybody's possession on the subject of **chimney** draught.

EXERCISE 1. The weight of a cubic foot of air at atmospheric pressure and 32° F. is ·0807, what is the weight of a cubic foot at 62° F.; at 552° F.? *Answer.* ·0761 lb., ·0393 lb.

EXERCISE 2. A column of air at 552° F., 1 square foot in section, and h feet high, how much less is it in weight than a column of equal height at 62° F.? *Answer.* h (·0761 − ·0393), or ·0368 h.

EXERCISE 3. What height of chimney will produce a draught equal to the pressure of 1 inch of water, if its average internal temperature is 552° F. and the temperature of the atmosphere is 62° F.? A square foot 1 inch high of water is $\frac{1}{12}$ of a cubic foot, and weighs 62·3 ÷ 12, or 5·2 lbs. This must be the difference in weight of a column of hot air inside the chimney and a column of the same height of cold air; taking the answer of Exercise 2, if h is height of chimney in feet,

$$\cdot 0368\ h = 5\cdot 2, \text{ or } h = 140 \text{ feet nearly.}$$

This answer ought to be remembered by all engineers.

The stuff in the chimney is a little heavier than air; the

temperature is perhaps less or more than 552° F., the outside air may be different from 62° F. Nevertheless, a chimney of the height of 140 feet will produce a draught of about 1 inch of water if the flow of gas is slow. When the gas flows fast, the draught diminishes because of the friction in the chimney itself.

This draught is needed to overcome the **frictional resistance** to the passage of air, (1) through the coals on the grate; the more these are scrubbed by the air the more rapid being the combustion of what may be called the fixed carbon. Indeed, this scrubbing conduces to less air being needed per pound of coal. The frictional resistance in the fire is probably the greatest of the frictional resistances in a boiler which has a thick fire; (2) round corners and obstructions in the flues; (3) along all the more regular parts of the flues and chimney. This is probably the smaller of the three terms whereas it ought to be much the greatest in a well-arranged boiler. It is proportional to the whole surface of flues and chimney, and is inversely proportional to their average cross section. Indeed, it is usual to say, what comes to the same thing, that it is proportional to l the length, divided by m the **hydraulic mean depth** (cross section of any channel conveying fluid divided by perimeter touched by the fluid is called the hydraulic mean depth). It will be found that almost everything that makes friction great in flues conduces also, and for much the same reasons, to better combustion and the more rapid transmission of the heat to the water. If the velocity of air through a boiler is doubled the friction is quadrupled, and so the draught must be four times as great. And if produced by a chimney we saw that the draught is proportional to its height. Nevertheless, when a boiler is intended to burn twice as much coal per hour on every square foot of grate, although the velocity of air is to be twice as great and the draught necessary is four times as great, it is usual to assume that the height of the chimney need only be twice as great. The subject, like all connected with it relating to friction of air in passages, has not yet been carefully studied. The height of a low chimney is usually fixed, not by calculation of the draught, but by the sanitary requirements of the neighbourhood.

The area of cross section of a brick chimney flue is usually taken to be this fraction of the whole grate area of the boiler or boilers $\frac{cw}{\sqrt{H}}$, where H = height of chimney in feet, w = weight of coal per square foot of grate per hour. c is 0·1 for one Lancashire boiler, ·08 for six boilers, ·065 for twelve boilers.

The average height of a steamer's chimney is 70 feet above the

grate; its section is usually $\frac{1}{3}$ to $\frac{1}{5}$ of the total firegrate area. In locomotives and portable engines $\frac{1}{1\frac{1}{2}}$.

More rapid rates of firing than 30 lbs. per hour per square foot of grate need **forced draught**. Nobody who has noticed the demoralisation of a good stoker when he is firing quickly and has no command of sufficient draught will attempt to have a consumption of 35 lbs. per square foot with natural draught. With good draught and thick fires (never less than 10 inches thick after or 7 inches before stoking) we use less air and have higher temperatures.

In locomotives the forced draught is produced by the exhaust steam puffing up the chimney. In marine boilers the steam must all be returned to the boiler, and a surface condenser must be used, because the use of sea water in the boilers was always troublesome, even when low pressures were used; but with the high pressures now in use, sea water would deposit all its sulphates of magnesium and lime in the boiler. Hence a steam blast cannot be used. Indeed, in all cases natural draught is relied upon in the ordinary working, and forced draught is only used in emergencies. And yet when using the natural draught of the chimney we find differences due to the weather, so that **fans blowing air** into the boiler room (a certain amount of care, but not too much, being taken to close all vents except through the furnaces) produce a wonderful improvement. The supply to fans is always through cowls on the upper deck. The name "forced draught" is more usually applied to the case in which the stokeholds alone are made air-tight, and air is pumped into them so that the draught obtainable is 1 to $1\frac{1}{4}$ inches of water in cruisers and 2 inches in battleships. Entrance to these stokeholds is through **air locks** (that is, two air-tight doors with a space between them). These are open if the forced draught is not on, and other openings are then also made.

Indeed, the fans are usually kept going all the time, and when the draught produced by them is only $\frac{1}{2}$ an inch of water it is really used as "natural draught" on the trials of a ship's engines. From 25 to 70 per cent. is said to be the increase of development of steam with fairly good combustion, producible (with good fires) by from 1 to 2 inches of forced draught.

Under natural draught in Lancashire boilers we find that we obtain the best results when twice the absolutely necessary quantity of air is admitted. Unless we admit this excess, the thicker parts of the fire get too little air. Under the fan-helped natural draught in marine boilers, about 50 or 60 per cent. of excess air is admitted, and under forced draught less than 50 per cent. of excess is admitted.

With the strong forced draught and thick fires of locomotive boilers good combustion is obtained with much less than 50 per cent. of excess air.

In **Howden's system** of forced draught, air driven by a fan passes through tubes in the uptake, and so is heated; it is admitted into the ashpit and over the grate, both spaces being air-tight, producing a draught of $\frac{3}{4}$ to 1 inch of water.

There is another system, not much in use, of drawing the gases through a fan before they get into the chimney.

EXERCISE 1. If grate area is 160 square feet, 45 lbs. coal per square foot per hour, 200 cubic feet of air at 60° F. and atmospheric pressure, per lbs. of coal. Find the useful work done by a fan if the draught produced by the fan is 1 inch of water pressure (the draught due to chimney is in addition to this).

Answer. 1 inch water pressure is $\frac{62{\cdot}3}{12}$, or 5·2 lbs. per square foot, and hence the work done per hour is $5{\cdot}2 \times 200 \times 45 \times 160$, or $7{\cdot}5 \times 10^6$ foot-pounds. The useful power is therefore 3·8 horse-power.

EXERCISE 2. If the useful power of the fan is 20 per cent. of the indicated power of the engine driving it, what is the indicated power?

Answer. 19 horse-power.

EXERCISE 3. The engine driving the fan consumes 30 lbs. of steam per hour per indicated horse-power, and the above boilers develop 10·2 lbs. of steam per pound of coal, what fraction of the total supply of steam is spent in driving the fan?

Answer. The total evaporation is $10{\cdot}2 \times 45 \times 160$, or 73,440 lb. per hour. The fan uses 19×30, or 570 lbs. per hour; the answer is therefore 0·0078, or 0·78 per cent.

EXERCISE 4. In the above boilers the heating surface is 45 times the grate area, and if boilers and their engines produce 1 indicated horse-power for 2 lbs. of coal per hour; at the above rate as they use 45×160, or 7,200 lbs. of coal per hour, the indicated horse-power is 3,600. This is 22·5 horse-power per square foot of grate, or 1 horse-power for every 2 square feet of heating surface.

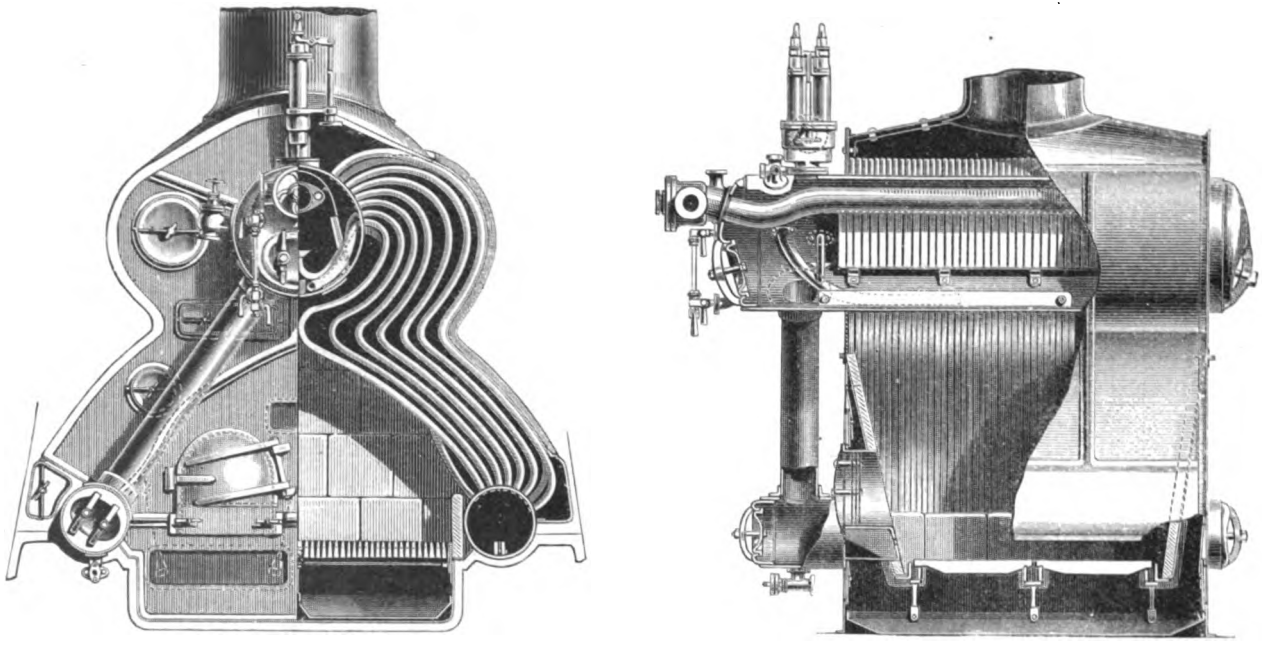

FIG. 209.—THORNYCROFT BOILER, "SPEEDY" TYPE. ONE FURNACE.

The inner row of 1¼ inch, ¼ inch thick, tubes are so close at the top as to make an impervious roof, and the outer row forms a similar wall except near the top, where the gases escape to the funnel. The water comes down by the two large tubes outside furnace at front end. See baffle plates in steam chamber. Steel casings cover the sides and front, with brick lining near the fire bars. 85 square feet of tube surface per square foot of grate.

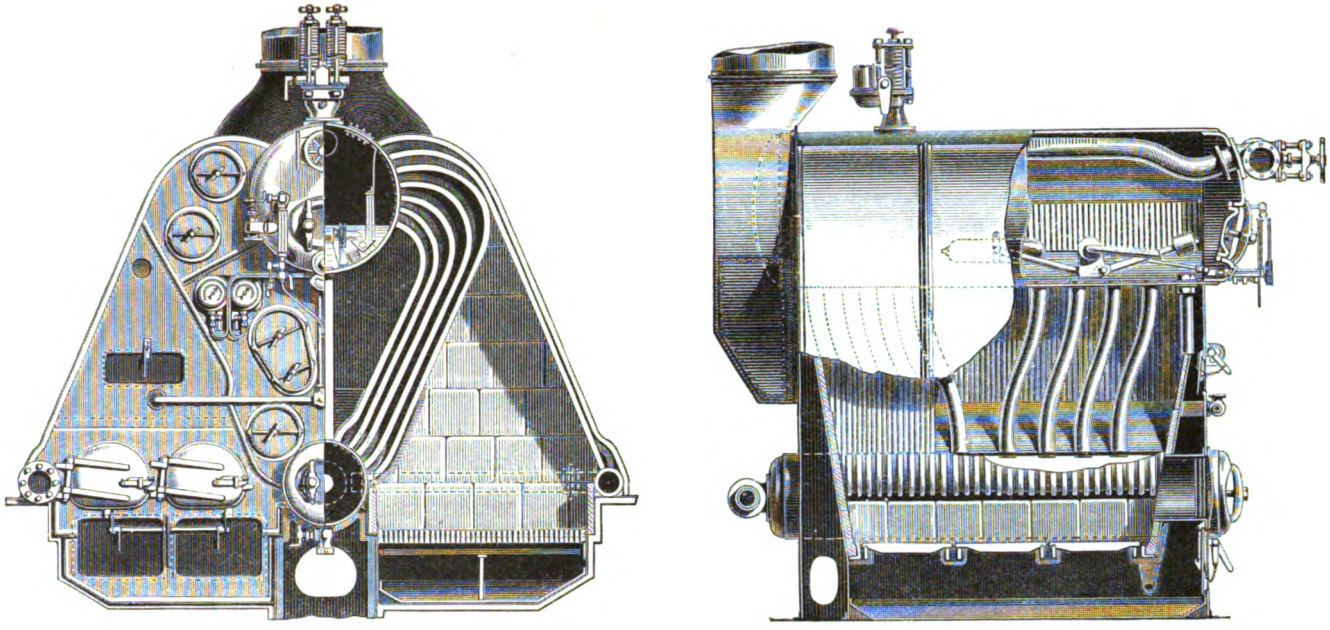

FIG. 210.—THORNYCROFT BOILER, "DARING" TYPE.

This type designed of greater height, less length, more accessibility. There are two furnaces. One large water cylinder below with two much smaller, the uptake is quite inside. The gases enter the inner rows near the bottom, and after rising, enter the uptake at the top. The down water tubes are in the central uptake, and therefore get some heat. The baffle plate in the steam chamber is a series of gratings. The tubes are ·104 inch thick.

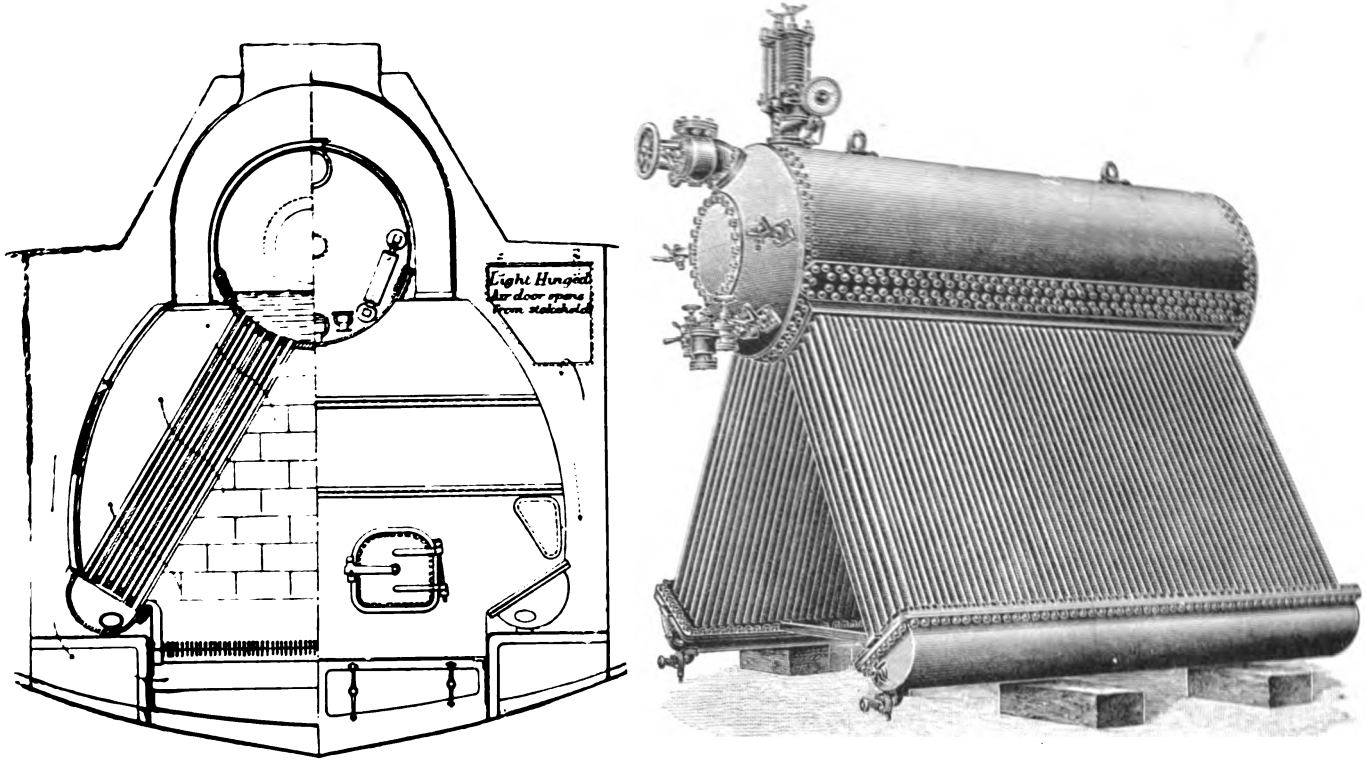

FIG. 211.—YARROW BOILER.

Tubes straight, entering steam chamber below water level. Easily cleaned and renewed, and few spare tubes need be carried. The air on its way to the fire passes through non-return hinged doors at the sides, and then round the boiler casing, keeping the place cool. Outside down pipes sometimes fitted on. As shown in the figure it is better for lengthened service at sea. The downward water flow is by such tubes as are less heated than the rest.

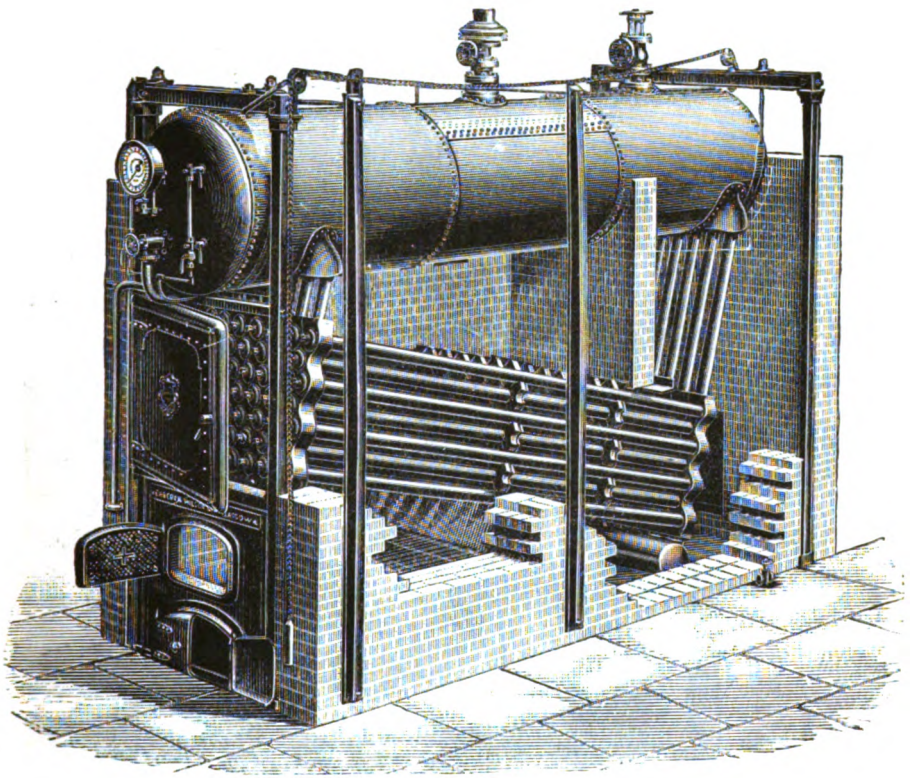

FIG. 212.—BABCOCK AND WILCOX.

The straight sloping tubes connect water boxes, each with a cover for examination and repair, and these with water pipes to the top drum, which is half filled with steam. The nearly vertical water pipes are short in front, where there is an upward flow, and long behind. The boxes are also connected horizontally, and sometimes additional circulating pipes are added.

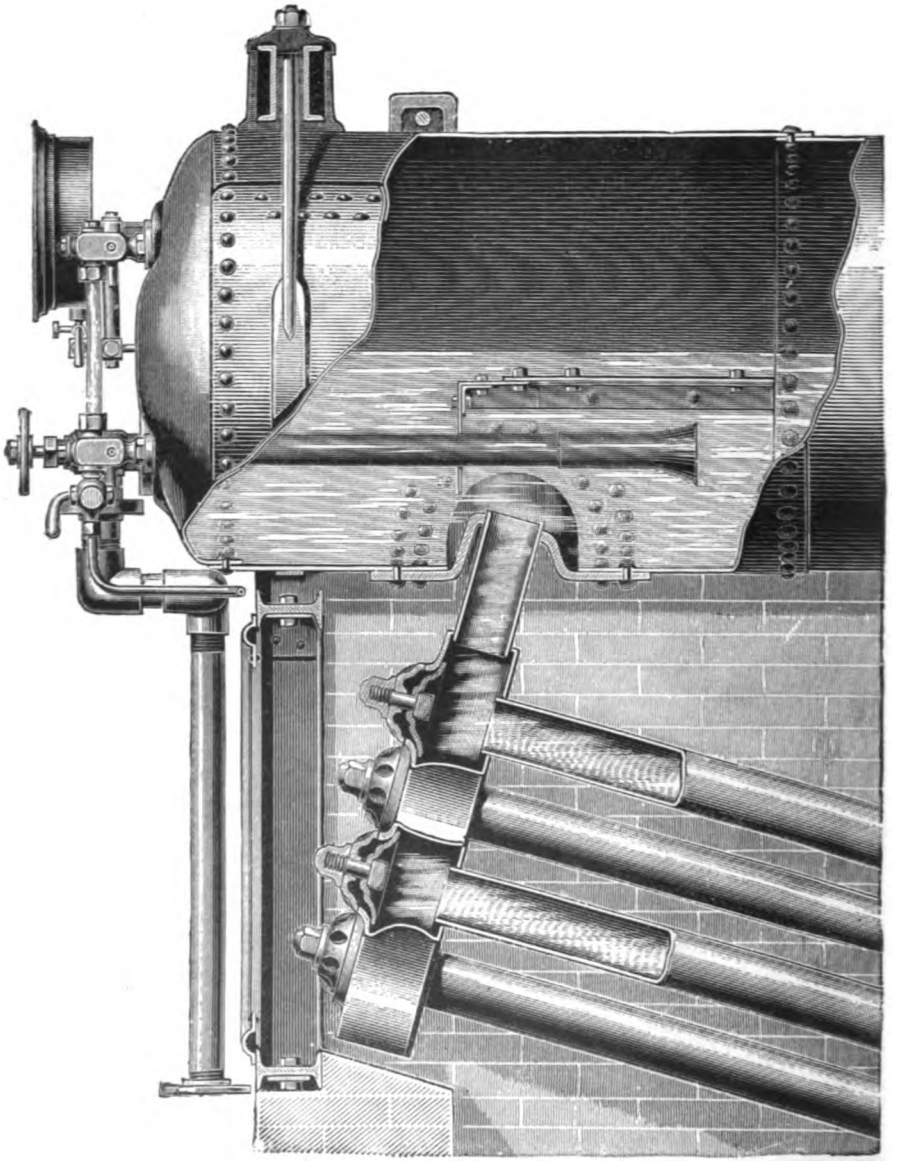

FIG. 213.—BABCOCK AND WILCOX.

CHAPTER XV.

NUMERICAL CALCULATION.

128. EVEN the beginner in this subject must know not merely how to multiply and divide numbers, he must be able to work by **logarithms**. Let him therefore practise multiplication and division and extraction of roots, &c., in this way, at once. He must know the ordinary symbols of arithmetic and algebra, such as $+$, $-$, $\times$, $\div$, $\sqrt{\ }$, $\sqrt[3]{\ }$, &c. Also what a^2 or a^3 mean. But he must also practise the calculation of a^b where a and b are any numbers whatsoever. Let him, therefore, at once, work the following exercises, *by logarithms.*

EXERCISE 1. Calculate $a \times b$, which is sometimes written ab or $a \cdot b$; also calculate $a \div b$, which may be written $a : b$ or $\frac{a}{b}$ or a/b when $a = 1323$ and $b = 24{\cdot}32$. *Answers.* 32175, 54·40.

Again when $a = 17{\cdot}56$ and $b = 143{\cdot}5$. *Answers.* 2520, 0·1224.

Again, when $a = 0{\cdot}5642$ and $b = 0{\cdot}2471$. *Answers.* 0·1394, 2·283.

Show that the following statements of the standard taken as the pressure of one atmosphere agree. 14·70 lbs. per square inch; 2,116·3 lbs. per square foot; 29·92 inches of mercury at 0° C.; 760 mm. of mercury at 0° C.; 1033 kilos per square mètre; 33·9 feet of pure water at 0° C.; 33·04 feet of sea-water at 0° C.

For a certain purpose it is necessary to measure two distances in inches, to multiply the numbers and to extract the square root. Find the answer when the distances are 2·34 and 1·56 inches. Find the answers also when the distances are 2·33 and 1·55; 2·35 and 1·57; 2·35 and 1·55.

Answers. 1·9106, 1·9004, 1·9208, 1·9085.

If the student will suppose the method of measurement of the

distances to be such that an error of ·01 of an inch was possible, he will see that only three figures, say 1·91, ought to be given in the answer.

In a leading newspaper a few days ago I saw the indicated horse-power of a marine engine quoted as 3562·74 horse-power. Well, it is very probable that this measurement is in error at least 5 per cent. That is, the person who made the measurements and calculations is not sure whether the answer might not be 3,700 or 3,400, and yet he pretends that his last figure has a meaning. I am sorry to say that many misleading figures of this kind are published in the best books written on the steam engine.

I often notice that even careful experimenters have been using thermometers such that errors of one degree are quite probable, and yet they will state results of observation and calculation to six significant figures. The very best English thermometers cannot be relied upon in the most experienced hands to the tenth of a degree Fahrenheit if ranges of from 20° F. to 212° F. have been observed.

A teacher ought to manufacture a great many exercises in multiplication and division to make his pupils familiar with logarithms, and not until they are so, ought he to proceed to the following.

EXERCISE 2. Calculate a^b. That is, the number a raised to the power indicated by b.

Find the logarithm of a, multiply it by b, and this is the logarithm of the answer.

Let $a = 20{\cdot}52$ and $b = 2$. *Answer.* 421·1.
$a = 1{\cdot}564$ and $b = 1\frac{1}{2}$. *Answer.* 1.956.
$a = 0{\cdot}5728$ and $b = 3$. *Answer.* 0·1879.
$a = 60{\cdot}71$ and $b = \frac{1}{3}$. *Answer.* 3·930.

Note here that to multiply by $\frac{1}{3}$ means that we are to divide by 3.

$a = 0{\cdot}2415$ and $b = \frac{1}{3}$. *Answer.* 0·6227.
$a = 1{\cdot}671$ and $b = 2$. *Answer.* 0·3581.
$a = 5014$ and $b = 3\frac{1}{2}$. *Answer.* $1{\cdot}12 \times 10^{-13}$.

Pupils must be well drilled upon the fact that a^{-b} means $1 \div a^b$, and that $a^b \times a^c = a^{b+c}$.

EXERCISE 3. Work out the values of $M = (sr^{-1} - r^{-s})/(s-1)$. When $s = 0{\cdot}8$ and r has the values 1·333, 1·5, 2, 3, 5, 8, 12, 20. The answers are given at page 286.

EXERCISE 4. Work out the values of M in Exercise 3 when $s = 1{\cdot}2$. The answers are given at page 286.

EXERCISE 5. It is said that the numbers headed θ, p, u, H and l

in the tables Art. 180 are nearly connected by the laws given in (1), (2), (5), (9), &c. Take a few of the numbers in the table and make the calculations, and state the apparent inaccuracy per cent. There is no better kind of exercise, for it ought to be well understood that to form a good acquaintance with the table means more than the one-third part of our study of the steam engine. Hence, when a student practises the use of a slide-rule or book of 4-figure logarithms, he ought to practise on these numbers. Such a table also gives rise to the best kind of exercise work on squared paper.

EXERCISE 6. Let the student practise finding **rates of increase.** Thus, if he takes numbers at random from columns θ and H of the table, say these :—

θ° F.	H.	$\delta\theta$.	δH.	$\delta H/\delta\theta$.
230	1152·1			
		9	2·7	0·3
239	1154·8			
		9	2·8	0·31
248	1157·6			
		9	2·7	0·3
257	1160·3			

He ought in this way to practise the finding of $dp/d\theta$ (this is equal to dp/dt if t is the absolute temperature) and others; using squared paper, perhaps, to help him to find an exact set of values.

EXERCISE 7. In the following case how ought one to proceed? From a table of values of p and θ to find $dp/d\theta$ for 105° C. with the greatest accuracy possible, p being pressure of saturated steam in pounds per square foot, and θ temperature.

θ° C.	p.	δp.		
90	1463			
		302		
95	1765		49	
		351		**8**
100	2116		**57**	
		408		5
105	2524		62	
		470		8
110	2994		**70**	
		540		**8**
115	3534		78	
		618		
120	4152			

One-fifth of 408 is evidently too small, one-fifth of 470 is too great; a little thought will show that the average of these is not correct either. There is a rule deducible from the *calculus of differences* which I employ in all such cases. Note the figures in clarendon type; it will be found that the true $dp/d\theta$ for $\theta = 105°$ C. is nearly the mean of $\frac{1}{2}(408)$, and $\frac{1}{2}(470)$ or 87·8; is more nearly the mean of $\frac{1}{3}\{408 + \frac{1}{2}(57)\}$ and $\frac{1}{3}\{470 - \frac{1}{2}(70)\}$ or 87·15; is more nearly the mean of $\frac{1}{3}\{408 + \frac{1}{2}(57) + \frac{1}{3}(8)\}$, and $\frac{1}{3}\{470 - \frac{1}{2}(70) + \frac{1}{3}(8)\}$ or 87·68.

If the quantities sloping downwards to the right be called d_1, d_2, d_3, &c., and those sloping upwards to the right be called e_1, e_2, e_3, &c., then the answer is the mean of

$$\tfrac{1}{5}\{d_1 - \tfrac{1}{2}d_2 + \tfrac{1}{3}d_3 - \tfrac{1}{4}d_4 + \tfrac{1}{5}d_5 - \&c.\}$$

and

$$\tfrac{1}{5}\{e_1 + \tfrac{1}{2}e_2, + \tfrac{1}{3}e_3 + \tfrac{1}{4}e_4 + \tfrac{1}{5}e_5 - \&c.\}$$

Either of these is the correct answer if we can be sure that the quantities such as p and θ are connected by a relation like

$$p = a + b\theta + c\theta^2 + d\theta^3 + \&c.$$

where we have a finite number of terms. In any such case the differences eventually all become zero. In particular cases we can find $\frac{dp}{d\theta}$ with great accuracy even from only two terms if we know a good empirical formula. Thus, for example, we know that with not very great, but with some, accuracy, the pressure and temperature of steam are connected by the law

$$\theta = a + bp^{1/5},$$

if θ is the temperature Centigrade or Fahrenheit. Hence if we only get

$$p = 2524 \text{ for } \theta = 105^\circ \text{ C.}, \quad p = 2994 \text{ for } \theta = 110.$$

Extracting the fifth roots of these two pressures

$$105 = a + 4{\cdot}790\, b$$
$$110 = a + 4{\cdot}958\, b.$$

Solving, we find $b = 29{\cdot}77$, $a = -37{\cdot}6$.

$$\text{Now } \frac{d\theta}{dp} = \tfrac{1}{5}bp^{-\frac{4}{5}}, \text{ or } \frac{dp}{d\theta} = \frac{5}{b}p^{\frac{4}{5}},$$

so that when $p = 2524$, $\frac{dp}{d\theta} = 88$.

I often ask a large class of students to work out many of the values of $\frac{dp}{d\theta}$ in the table Art. 180, and to show the answers in a curve on squared paper.

EXERCISE 8. Assuming from Exercise 7 that $\frac{dp}{dt}$ for $\theta = 105^\circ$ C. is 87·68, find u the volume of a cubic foot of saturated steam from the formula

$$l = \frac{dp}{dt}(u - v_w)t$$

where l is the latent heat of 1 lb. of this kind of steam in mechanical units or 740,710 foot-pounds; t is the absolute temperature, or $\theta + 273{\cdot}7$, and v_w is the volume of one pound of water which is nearly negligable. *Answer.* 22·31.

EXERCISE 9. A student is supposed to know that $yx^n = a$ is really the same as $\log. y + n \log. x = \log. a$, any kind of logarithms being used, and he ought to practise calculations requiring this knowledge.

For example: let us suppose that some kind of stuff follows the law $pv^{1{\cdot}13} = a$ where p is pressure in pounds per square inch and v is

volume in cubic feet. If $p=100$ lbs. per square inch and $v=1$ cubic foot, find a. *Answer.* 100.

Now if v becomes 1·5, using the same value of a, find p.

Answer. 63·24.

Again, if v becomes 2, $2\frac{1}{2}$, 3, $3\frac{1}{2}$, 4, in each case find the corresponding value of p.

See if your answers are as shown in the third column of the first table of Art. 156.

Repeat the above work when $pv^{0\cdot9}=a$, taking $p=100$ and $v=1$ to start with, and compare your answers with the figures of Art. 156.

EXAMPLE. It is said that if p is the pressure of saturated steam in pounds per square inch and u is the volume (in cubic feet) of a pound of steam, then there is a rule which is very nearly true,

$$pu^{1\cdot0646}=479.$$

Take some of the values of p in the table Art. 180 and calculate values of u for the purpose of this exercise, and also notice to what extent the formula does really represent the relation between p and u.

EXERCISE 10. Mr. D. Baxandall and Mr. Lister find that the numbers in the last columns of Table II. Art. 180, may be calculated by the simple formulæ

$$w=5\cdot84+\frac{443}{p+50}$$

where w is the weight of dry saturated steam per horse-power per hour of pressure, p lb. per square inch, which would be used by a perfect condensing engine using the Rankine cycle (see Art. 214); and

$$w=8\cdot28+\frac{1077}{p+4}$$

where w is the weight of dry saturated steam per horse-power of pressure p lb. per square inch per hour, which would be used by a perfect non-condensing engine using the Rankine cycle.

Test the accuracy of these formulæ for the following values of p by comparing with Table II. of Art. 180.

Condensing.			Non-Condensing.		
p.	w by above formula.	w in table.	p.	w by above formula.	w in table.
50	10·27	10·33	50	28·04	28·4
110	8·61	8·60	110	17·73	17·65
170	7·85	7·86	170	14·36	14·50
280	7·18	7·16	180	12·07	12·05

EXERCISE 11. If $p_1 v_1^{1.13} = p_2 v_2^{1.13}$ and if $\frac{v_2}{v_1}$ be called r. If $p_2 =$ 6 lbs. per square inch, find r for the following values of p_1.

p_1	250	200	150	100	50
r	27·13	22·27	17·26	12·06	6·53

We have here found the ratio of cut off which enables the pressure p_1, to become 6 at the end of the expansion.

EXERCISE 12. If $p = a(\theta + b)^c$, and if we have given the following values

θ° C. . . .	130	135	140
p	39·25	45·49	52·52

Find θ when $p = 45$. Also find $\frac{dp}{d\theta}$, which is $cp/(\theta + b)$.

Answer. $\theta = 134°66$ $\quad \frac{dp}{d\theta} = 1·31$

The student will find that the above formula, although good enough for interpolation purposes, is not an accurate general formula connecting p and θ.

EXERCISE 13. In proving the reasonableness of the Willans law for steam engines, I use in Art. 161 the approximate formula

$$\frac{1}{u} = ·0171 + ·0021\ p.$$

where u is the volume in cubic feet of 1 lb. of steam and p is the pressure in pounds per square inch.

Take the following values of p, calculate u, and compare with u as given in table.

p.	u by the above formula.	Real u
80	5·40	5·37
120	3·71	3·67
140	3·21	3·18
180	2·53	2·51
220	2·09	2·09
280	1·65	1·65

129. The *common* logarithm of a number n may be and often is written as log. n, but if we wish to let readers be quite sure that it

is on the common system, which suits our decimal system, or is to the base 10 as we say, then we write it as $\log_{\cdot 10} n$.

Mathematical men use **Napierian** (mechanical engineers sometimes call them hyperbolic) logarithms to the base e, as they are called, where e is a well-known number 2·7183. Thus log. n is read as "The Napierian logarithm of the number n." In mathematical work generally, log. n always means the Napierian logarithm, the e being left out. To convert *common* into Napierian logarithms, multiply by 2·3026.

The Napierian logarithm is very useful to the engineer, and so we have given a table at page 288.

EXERCISE 1. Using a table of common logarithms calculate the Napierian logarithms of 1, 2, 3, 4, 5, 6, 7, 8, 9, 10, 12, 16, 20. The answers are given at page 288.

EXERCISE 2. Work out the values of $(1 + \log_e r)/r$ when r has the values 1, 1·333, 1·5, 2, 3, 5, 12, 20. The answers are given in the fourth column, page 286.

EXERCISE 3. If $\frac{p_0 v_0}{t_0} = R$, find R when $v_0 = 12{\cdot}39$, $t_0 = 493$ (corresponding to 32° F.) and $p_0 = 2{,}116$.

Answer. $R = 53{\cdot}2$.

EXERCISE 4. If $v = 3$, $t = 500$, find p if $\frac{pv}{t} = 53{\cdot}2$.

Answer. $p = 8{,}865$.

EXERCISE 5. If K = ·2375, k = ·1688, and if v, t and p have their values in the last exercises, calculate ϕ, the entropy of a pound of air, in the following ways:—

$$\phi = k \log. \frac{p}{p_0} + K \log. \frac{v}{v_0} \quad \ldots\ldots\ldots \quad (1)$$

$$= K \log. \frac{t}{t_0} - R \log. \frac{p}{p_0} \quad \ldots\ldots\ldots \quad (2)$$

$$= k \log. \frac{t}{t_0} + R \log. \frac{v}{v_0} \quad \ldots\ldots\ldots \quad (3)$$

The logarithms are Napierian.

Answer. − 0·0411 in all three cases.

EXERCISE 6. The numbers headed ϕ_w (the entropy of 1 lb. of water) are very nearly equal to log. $\frac{t}{t_0}$.

This would be exactly right, only that the specific heat of water is not constant. t is any absolute temperature, and t_0 is the

absolute temperature corresponding to 0° C. or 32° F. Calculate a few values.

EXERCISE 7. The numbers headed ϕ_s (the **entropy** of a pound of steam) are calculated by adding to ϕ_w, the latent heat l divided by the absolute temperature t. Calculate a few of them.

130. EXERCISES IN MENSURATION.

(1) A cylinder 18 inches diameter, 30 inches long, what is its volume in cubic feet?

Answer. 4·41.

(2) A cubic foot of water at ordinary temperatures weighs 62·3 lbs. A gallon contains 10 lbs. of water. There are two pints in a quart and four quarts in a gallon. The clearance spaces in the cylinder of a steam engine are filled with water and emptied; the water is measured and found to be 13·2 and 15·6 pints. What are the volumes of the clearance spaces?

Answer. 457 and 533 cubic inches, or ·26 and ·31 cubic feet.

(3) If the answer to Exercise 1 is the volume of the working stroke of the same cylinder, compare the volumes of clearances and working stroke.

Answer. 6 per cent and 7 per cent.

(4) A pound of stuff, partly steam and partly water, at a pressure of 69·21 lbs. per square inch, fills a vessel whose volume is 5·2 cubic feet. Neglecting the volume of water, what is the weight of the portion which is steam? In the table, page 320, you will find the volume of one pound of this kind of steam. *Answer.* 0·843 lb.

(5) If the vessel of the last question gets larger, its volume becoming 9·8 cubic feet, and we find that the pressure is 33·71 lbs. per square inch, what are now the weights of steam and water present? *Answer.* 0·809 lb. steam, 0·191 lb. water.

In the above two questions we neglected the volume of the water. We had ·157 and ·191 lb. of water respectively in the two cases, and these must be very nearly the correct amounts, however carefully the calculation had been made. Taking water at 62·3 lbs. per cubic foot the volumes are ·0025 and ·0031 cubic feet, obviously small enough to be neglected in comparison with the volumes of steam in steam engine calculations.

(6) A volume of 7,620 cubic inches is represented on a diagram to scale by a distance of 8·6 inches, what distance will represent 457 cubic inches? What volumes will be represented by 3·34, 5·59, 8·39, 0·65 inches?

Answer. 0·52 inches; 1·715, 2·865, 4·323, and 0·3334 cubic feet.

The above answers are all used in Chap. V.

(7) A locomotive travels at 50 miles per hour; how many revolutions per minute are made by one of its wheels, 6 feet diameter, assuming no slip?

Answer. 233·3 revolutions per minute.

(8) A screw propeller makes 150 revolutions per minute, its slip is 3 per cent., the ship travels at 15 knots. What is the pitch of the screw?

Answer. 10·43 feet.

(9) A cylinder is 15 inches in diameter. What is the area of its cross-section in square inches and in square feet? The crank is 14 inches. What is the working volume in cubic feet? It takes exactly a gallon of water to fill the clearance space. What is its volume? Express the clearance as a fraction of the working volume.

Answers. 176·715 square inches. 2·8634 cubic feet. 0·16 cubic feet. 0·0561.

(10) The length of the indicator diagram from the cylinder of (3) parallel to the atmospheric line is 2·8 inches; what distance will, to the same scale, represent the clearance?

Answer. ·157 inch.

(11) A boiler has 300 tubes 8 feet long, 3 inches diameter inside. What is the total cross-sectional area? What is the area of tube-heating surface?

Answer. 2,122 square inches. Heating surface = 1,880 square feet.

(12) The hydraulic mean depth m of a pipe or channel is its cross sectional area, divided by its perimeter touched by the fluid; in the case of a pipe running full of water, or of a pipe in which gas is flowing, this is the whole perimeter. What is the hydraulic mean depth of one of the above tubes?

Answer. The area is $\frac{\pi}{4} \times 3^2$; the perimeter is $\pi \times 3$; $m = \frac{3}{4}$ inch.

(13) Find the volume and weight of the rim of a cast iron wheel of square section, outside and inside radii 20 feet and 18 feet 6 inches.

Answer. Volume = 272 cubic feet. Weight = 54·5 tons.

(14) When the piston of (3) has passed through one-third of its stroke, what is the volume behind it?

Answer. 1·1145 cubic feet.

(15) In the back stroke the piston of (9) is one-tenth of its stroke from the end when cushioning is taking place, what is the volume?

Answer. 0·446 cubic feet.

(16) In the engine of (3) if the crank shaft makes 200 revolutions per minute, neglecting angularity of the connecting rod, find the velocity of the piston when it has travelled over these fractions of its stroke, 0·2, 0·4, 0·6, 0·8.

Answer. 19·44, 23·8, 23·8, 19·44 feet per second.

(17) When the piston of (3) has travelled over 0·4 of its stroke, at what rate (cubic feet per second) is steam coming in through the port? (neglect the fact that some stuff already in expands). If the port opening is $8'' \times \frac{1}{2}''$ what is the velocity through it of the entering steam?

Answer. 29·2 cubic feet per second; 1,050 feet per second through port.

131. Students are supposed to know how to find the **areas and volumes** of regular figures, and to find the **weights** of objects by calculation. Exercises will be found in many books, or they may easily be manufactured by teachers. It is necessary here, however, to speak of the **area of irregular figures**. Thus to find the area of Fig. 214. Every student ought to practise the use of the planimeter in finding areas. Simpson's rule will be found in all books on

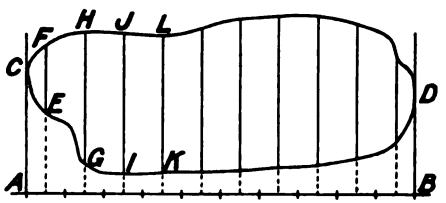

FIG. 214.

mensuration, but the following simpler rule is so much used by engineers that the beginner ought to get well accustomed to its use. Let any direction be called the direction of the length of the figure —we shall take it to be horizontal. Draw two parallel lines $C\,A$ and $D\,B$ touching the figure at its extreme ends, and let the distance $A\,B$, which is at right angles to both, be called the length of the figure. Divide $A\,B$ into any convenient number of equal parts. Let us take ten equal parts. Draw a perpendicular at the middle of each part and measure $E\,F$, $G\,H$, $I\,J$, &c., the parts intercepted by the figure. We should call these the ten equidistant breadths of the figure. Add these together and divide by ten, and we have the **average breadth** of the figure. This average breadth multiplied by $A\,B$ is the area of the figure approximately.

EXERCISE 1. If the ten equidistant measured breadths are 0·21, 0·92, 1·16, 1·27, 1·25, 1·27, 1·24, 1·18, 1·15, 0·55 inches, and if the length $A\,B$ is 3·24 inches, adding the breadths we have 10·20, and dividing by ten we find 1·02 the average breadth. The area is

$3{\cdot}24 \times 1{\cdot}02$ or 3·30 square inches. Notice that it is not well to give too many figures in an answer in engineering.

2. If the area of a figure is 25·06 square inches and its length is 9 inches, what is its average breadth? *Answer.* 2·78 inches.

3. In the **indicator diagram** shown in Fig. 77, we take $A_1 A_2$ to be the length. It is 2·50 inches. The area of the figure is found to be 4·56 square inches, by means of a planimeter. Find the average breadth. *Answer.* $4{\cdot}56 \div 2{\cdot}5 = 1{\cdot}82$ inches.

4. The ten equidistant breadths of Fig. 77 are 1·87, 2·15, 2·46, 2·51, 2·30, 1·35, 1·20, 0·92, 0·85, 0·74 inches, what is the average breadth? *Answer.* 1·63 inches.

5. In the last exercise, if the breadth of the diagram represents the pressure of steam to such a scale that 1 inch represents 40 pounds of pressure per square inch, what is the average pressure shown on the diagram? *Answer.* 65·2.

6. In Art. 32 you will find numbers which will enable you to draw any of the hypothetical indicator diagrams there described. Find their average pressures graphically, and see how nearly you come to the answers given in page 76.

7. The **pull on a tramcar** varies quite gradually in the following way: find the average pull. The instrument with which the observer measured the pull was really a spring balance, which you may call a dynamometer if you please. Its vibrations were damped by a dash-

s	P
0	800
10	750
13	720
15	710
20	690
26	650
30	630
34	610
40	600
45	540
51	530
60	570
70	620
80	670

pot, else it would have been a little difficult to read it. s is the distance in feet, which the car had travelled through from a particular place when the reading of each pull P (in pounds) was made. Find the average pull. If all the readings were at equidistant points

there would not be any great error in taking the average of all the numbers P by merely adding them up and dividing by 14. But the distances s must be plotted horizontally (to scale) on a sheet of paper, and ordinates to represent P must be raised so as to get a curve which shows how P varies. I have drawn a curve through the ends of the above ordinate and find that the average value of P seems to be about 635 lbs., but of course any such answer is only approximately correct.

If a student does the following exercise, and meditates a good deal on his answers, it will be time well spent. In the table on p. 247 insert the time in seconds at which the tramcar reached each of the places at which the reading was taken. We count time from the first observation, the fourteen observed times were (let us suppose), 0, 0·2, 2·5, 3·0, 3·7, 4·1, 4·8, 5·2, 6·2, 6·5, 7·0, 8·3, 9·7, 11·2 seconds. Now find the **time average** of the force. That is, plot (P) and the time, and draw a curve and find its average breadth. I find the answer to be 640 lbs.

Now why is the time average different from the *space* average found above? I put this suggestive question here in a note because I do not wish a student to think it an essential part of our elementary treatment of the steam engine; but every student of applied mechanics will find the speculation an important one.

CHAPTER XVI.

ENERGY ACCOUNT.

132. In Chap. III. I assume that my reader knows how to make calculations concerning the **doing of work**; these belong to the more elementary subject of applied mechanics. Average force (pounds) in the direction of motion, multiplied by the distance (feet) moved through, is work done (foot-pounds). Many exercises ought to be dealt with where work is done against and by gravity or done against friction, or done in order that some equivalent energy may be stored. **Power is rate of doing work.** The power which an agent must exert in many operations must be well known through many numerical calculations. The operations about which a student's mind must be stored with exact figures are:—Traction or the pulling of railway trains, tramcars and all sorts of carriages on different kinds of roads with different kind of wheel tyres; the power which must be exerted in the propulsion of ships of different tonnage and shape, at different speeds; the waste of power by friction in such operations as the pumping of water, the creation of electric energy and its transmission and reconversion; the power needed to drive workshop tools of all kinds, and the machines used in all kinds of manufacture. English manufacturers are now beginning to copy the more sensible or scientific methods of their rivals in Germany and America, and like Dorothea in the story they are "learning what everything costs" and not only what everything costs in money but in money's worth. The mathematics of this subject of energy is the simple mathematics of the housekeeper and the butcher and the baker. There is still much measurement to be done with dynamometers, but the wonderful improvements which have been effected in steam engine manufacture in the last twenty years, due altogether to the good (energy) account keeping of electrical people who know exactly what they want and whether they get what they want, already enable us to say that a beginning has been made. There are at least two firms

of steam engine makers who have given up the slipshod and shiftless methods of working of the past; and the recent strike has done this much good that English manufacturers were forced to travel and now blame themselves a little for their own shortcomings.

An English cook specifies "pinches" of salt, "handfuls" of flour, "small amounts" of other things. An English engineer was often more hopelessly vague and kept no account of coal, steam, indicated power, actual power, power wasted in transmission, power given to a machine. Machines had to be driven and the engineer drove them, and his client was satisfied because like Toddy he only wanted "to see the wheels go wound."

As I have said, the subject is supposed to be dealt with under the head "applied mechanics." Nevertheless, as I shall refer to these figures, I have placed in the following sheets some scraps of information that I usually carry about in my head. **The answers to the following exercises** are always in the mind of a practical engineer.

Again, I have found it convenient to assume here that a student knows something of heat and other forms of energy, the heat required to produce a pound of steam, &c. although I do not enter upon the subject of heat and steam regularly until I get to Chap. XVIII. I have done this illogical looking thing because any course that one can take in teaching a subject must be illogical and the best course is usually the one that seems most illogical.

Units of Energy *used Commercially.*

1 horse-power hour = 1,421 centigrade heat units = 2,558 Fahrenheit heat units = 1,980,000 foot-pounds.

1,000 gallons of water at a pressure difference of 750 lbs. per square inch convey 17,300,000 foot-pounds.

1 Board of Trade electrical unit = 1,000 watt hours = 2,654,000 foot-pounds.[1]

1 centigrade heat unit, probably the most suitable value if we deal with Regnault's numbers = 1,393 foot-pounds. See Art. 177.

1 Fahrenheit heat unit = 774 foot-pounds.

The standard unit of evaporation which is the latent heat of 1 lb. of steam at atmospheric pressure = 536 centigrade heat units = 966 Fahrenheit heat units = 748,000 foot-pounds = the evaporation unit of energy.

Calorific energy of 1 lb. of average coal = 8,570 centigrade = 15,430 Fahrenheit heat units = about 16 evaporation units = about 12,000,000 foot-pounds.

[1] One horse power = 746 Watts; one electrical unit of power = 1,000 watts.

Calorific energy of 1 lb. petroleum, about 17,000,000 foot-pounds.

Calorific energy per pound of town refuse actually obtained in a destructor (after deducting the large amount of energy wasted in steam-jets) = 900,000 foot-pounds.

Calorific energy of 1 cubic foot average coal gas = 530,000 foot-pounds.

Calorific energy of 1 cubic foot of Dowson gas (1 lb. of anthracite produces about 70 cubic feet) = 125,000 foot-pounds.

133. EXERCISES. Calculate the **efficiencies** of the following engines, using the above figures. The power is actually given out by the engines.

Small engine with varying load using 20·9 lbs. of coal per horse-power hour. *Answer.* ·00790.

Small steam engine using 8 lbs. of coal per horse-power hour. *Answer.* ·0206.

Lenoir gas engine using 105 cubic feet of coal gas per horse-power hour. *Answer.* ·0356.

Oil engine (varying load) using 2·5 lbs. petroleum per horse-power hour. *Answer.* ·0457.

Hugon gas engine using 70 cubic feet of coal gas per horse-power hour. *Answer.* ·0536.

Large good condensing steam engine using 2 lbs. of coal per horse-power hour. *Answer.* ·0825.

Oil engine (constant load) using 1·0 lb. petroleum per horse-power hour. *Answer.* ·1165.

Gas engine (using Dowson gas) using 1·4 lb. of coal per horse-power hour. *Answer.* ·1179.

Modern gas engine using 26 cubic feet of coal gas per horse-power hour. *Answer.* ·1436.

Modern gas engine using 97 cubic feet of Dowson gas per horse-power hour. *Answer.* ·1633.

The Diesel oil engine is said to use only 0·56 lb. of kerosene per brake horse-power hour. *Answer.* ·21.

Exercises.

Change into horse-power the rate of conversion of chemical energy burning in the following cases :—

1 lb. of kerosene per hour. *Answer.* 8·48.

1 lb. of coal per hour. *Answer.* 6·06.

1 cubic foot of coal gas per hour. *Answer.* 0·286.

1 cubic foot of Dowson gas per hour. *Answer.* 0·0631.

Exercises.

The student will for himself find information to enable him to check or correct the following figures.

Roughly, the cost in pence of a horse-power hour in London by various agents may be taken to be:—Labourer carrying things up ladders 150; labourer lifting weights by rope and pulley 100; labourer using winch or capstan 50; horse in whin gin 8; horse on a waggon 4; electric power (at 8d. per unit) 6; hydraulic power in London (at 18 pence per 1,000 gallons 700 lbs. pressure) $2\frac{1}{5}$; small gas engine or oil engine or good small steam-engine of about 15 horse-power in steady work, including cost of attendance 1; large gas engine 0·5. 1 horse-power for a year, 10 hours a day (Sunday rest) is 3,130 horse-power hours. At one penny per horse-power hour this is about £13 per annum.

EXERCISE. If a company sells electric power, 24 hours a day, every day and charges £5 per horse-power per annum, how much is this per horse-power hour? *Answer.* $\frac{1}{6}$ of a penny. How much is it per electrical unit? *Answer.* 0·15 of a penny.

The following prices are for the fuel alone, where the fuel is cheap in England; large steam engine in steady work 0·13, gas engine using Dowson gas 0·08.

134. *Engines of any size from* 10 *to* 250 *maximum indicated horse-power.*

Take I_1 as the highest indicated power, I as any indicated power, then usually, if B is brake, or actual horse-power given out,

$$B = \cdot 95I - \frac{1}{10}I_1,$$

If K = cost of engine, boilers, fittings, buildings, &c., in pounds sterling

$$K = 100 + 20I_1,$$

If C = coal used in pounds per hour

$$C = 34 + 1 \cdot 8I.$$

Petty stores per annum (of 3,000 hours) $P = 2 + \cdot 25I$ in pounds sterling.

,, ,, (1,000 hours) $P = 1 \cdot 2 + \cdot 15I$.

Labour in pounds sterling for a year (of 1,000 hours) $L = 24 + \cdot 6I$.

,, ,, ,, (of 3,000 hours) $L = 40 + I$.

For electric lighting in London at present (1898) the total indicated horse-power supplied is

50,000	horse-power	from high speed engines.
20,000	,,	low speed vertical.
5,000	,,	low speed horizontal.
5,000	,,	special engines.

The tendency for the time seems to be to return to a low speed vertical marine type of 2,000 or less power. The best usual results from high speed engines are 1 indicated horse-power hour for 16 to 18 lbs. of steam of 170 lbs. per

square inch absolute, the electrical power being 82 to 86 per cent. of the indicated power. How much steam do these figures give per electrical unit? *Answers.* 26 to 28 lb.

The boilers using Welsh coal, at $\frac{3}{4}$ of their full load, evaporate about $8\frac{1}{2}$ lbs. of water per pound of coal; what do the above figures give in pounds of coal per unit? *Answers.* 3·1 to 3·3.

The average of all the daily load factors for a year is from 10 to 20 per cent. The *Load Factor* means the ratio of the average power supplied to the maximum power. It was Mr. Crompton who first drew attention to the great importance of the load factor on economy. One of the companies whose average daily load factor is 15 per cent., uses 5·6 lbs. of coal per unit generated throughout the year. This is the best result yet obtained; this is 3 lbs. of coal per hour per average indicated horse-power. What is the ratio between electrical and indicated horse-power? *Answer.* 72 per cent.

The cost of coal at that station is found to be $\frac{1}{2}d.$ per electrical unit. How much is this per ton? *Answer.* 16*s.* 8*d.*

The lowest coal bill for any company using alternating current is 6 lbs. of coal per indicated horse-power hour. Wages in both systems cost about $\frac{3}{4}d.$ per unit.

I dwell at some length, see Art. 149 particularly, on the effect of a light load on an engine in diminishing its economy. In boilers the great loss of economy due to light load on a central station is mainly because of the great waste in banking up the fires and putting the boilers in steam again, also because loss of heat goes on all the time.

135. As an evidence of the progress of science I venture to publish here a copy of one weekly report made by the resident engineer (Mr. O. B. Smith) of the Hove Electric Lighting Co., Ltd. Mr. Crompton has been kind enough to get me permission to publish it, and he thinks with me that it is good for young engineers to see how accounts are now being kept at an electric light station. I have before me a copy of the daily log sheet, giving the measurements made every fifteen minutes throughout the day, separate logs being kept for each department of the station; but I refrain from publishing this.

REPORT No. 261.

Date.	– and + Generated. Volts.	Amps.	Units.	Units.	– Generated. Volts.	Amps.	Units.	+ Generated. Volts.	Amps.	Units.
Nov. 12	245 / 265	4480 / 1706	1090 / 452	1542						
,, 13	244 / 268	4637 / 1766	1128 / 473	1601						
,, 14	241 / 268	3198 / 959	770 / 280	1050						
,, 15	246 / 270	4944 / 1244	1211 / 336	1547	No	out	of	balance	load.	
,, 16	245 / 268	4883 / 1461	1195 / 392	1587						
,, 17	244 / 270	4789 / 1487	1165 / 401	1565						
,, 18	246 / 270	4931 / 1218	1210 / 329	1539						
Totals	—	—	—	10432						

Engines and Dynamos—Hours running and Output in Kilowatt Hours.

Date.	A, 60 Kw. hrs.	A, 60 Kw. Kw.hrs.	B, 60 Kw. hrs.	B, 60 Kw. Kw.hrs.	C, 60 Kw. hrs.	C, 60 Kw. Kw.hrs.	D, 90 Kw. hrs.	D, 90 Kw. Kw.hrs.	E, 154 Kw. hrs.	E, 154 Kw. Kw.hrs.	Total Output. Kw.hrs.	Capacity of plant in use. Kw.hrs.
Nov. 12	9	540	5	300	4½	270	7	630	—	—	1542	1740
,, 13	9½	570	6½	390	3¼	195	—	—	5¼	808	1601	1963
,, 14	6½	390	5¼	315	—	—	6	540	—	—	1050	1245
,, 15	6½	390	7¼	435	5¾	345	7	630	—	—	1547	1800
,, 16	3¾	225	8¼	495	7¼	435	5½	495	1¼	192	1587	1842
,, 17	8½	510	7¾	465	4¾	285	7	630			1566	1890
,, 18	5¾	345	1¼	75	6½	390	1¾	157	6	924	1539	1891
Totals	49½	2970	41¼	2475	31¾	1920	34¼	3082	12½	1924	10432	12371

	£	s.	d.	pence.	Pence per unit. Delivered to consumers.	Generated.
53,312 lbs. of coal @ 19/4 per ton	23	0	1	5521	·619	·529
,, ,, ,, ,,	—	—	—	—	—	—
45,000 galls. of water @ 10*d.* per 1,000 gallons	1	18		459	·052	·044
Petty stores	1	9	5	353	·039	·034
Wages	7	13	0	1836	·206	·176
Superintendence	3	0	0	720	·081	·069
	£37	0	9	8889	·997	·852

Highest load during the week . . . . . 2070 amps.
,, ,, corresponding week last year . 1645 ,,
Increase . . . . . 25·8 %

Units delivered to consumers 8910
,, corresponding week last year . . . 6855
Increase . . . . . 30 %

Load factor . . . . . $\frac{10432}{12371} = 84{\cdot}5$ %

Battery. – – 85 %

Efficiency. + 86·5 %

Units delivered to consumers 8910
,, for motors 157
Total delivered 9067

Units generated 10432
,, delivered 9067
Units unaccounted 1365

Units unaccounted, 13·1 %.

5·1 lbs. of coal per unit generated
4·4 galls. water ,, ,,

Week Ending Nov. 18, 1897.

− Delivered.			+ Delivered.			Motors.		− Battery		+ Battery.	
Volts.	Amps.	Units.	Volts.	Amps.	Units.	−	+	Discharge.	Charge.	Discharge.	Charge.
110	6098	670	110	6228	685	1	6	690	825	680	735
	6267	690	,,	6379	701	—	10	670	814	690	715
	4057	446	,,	4127	454	9	5	520	715	440	589
	6175	679	,,	6135	674	11	22	745	820	690	790
	6270	690	,,	6272	690	14	21	680	790	680	825
	6186	680	,,	6173	679	10	19	750	890	750	935
	6000	660	,,	6088	669	11	18	760	913	690	814
—	—	4515	—	—	4552	56	101	4815	5667	4620	5343

	Boiler hours under Steam.				Condenser.	Coal @		Coal @ 19/4.		Water.	Waste.	Oils.		
												Machine.	Cylinder.	Castor.
Date.	1	2	3	4	hrs.	Tons.	cwts.	Tons.	cwts.	Gallons.	lbs.	pints.	pints.	pints.
Nov. 12.	7	10½			Not in use.			3	10	6700	2	4	2½	½
,, 13.	11	7½						3	12	6900	—	4	1	1½
,, 14.	7¼	6½						2	2	4700	—	4	1	—
,, 15.	11	7						3	10	5900	2	6	3	½
,, 16.	6¾	10¾						3	14	7400	1	2	1	1½
,, 17.	11	7						3	16	7100	1	2	2	½
,, 18.	7¾	2		7½				3	12	7200	—	2	—	1½
Totals .	61¾	51¼						23	16	49500	6	24	10½	6

Sundries.	s.	d.
9 lbs. lime and 12 lbs. soda	1	0
8 ,, rubber rings	0	8
4 pts. paraffin	0	3
½ lb. tallow	0	3
6 foot emery cloth	0	6
Carried forward	2	8

Petty Stores.	£	s.	d.
24 pts. machine oil @ 2/- per gall.	6	0	
10½ ,, cylinder ,, 4/- ,,	5	3	
6 ,, castor ,, 2/4 ,,	1	9	
6 lbs. waste @ 3d. per lb.	1	6	
7 cwts. firewood @ 1/6 per cwt.	10	6	
4 gauge glasses	1	9	
Separator ,,	—		
Incandescence lamps	—		
Sundries (brought forward)	2	8	
	£1	9	5

Week Ending Nov. 19, 1896.

	£	s.	d.	pence per unit delivered.
Coal	19	3	9	·671
Water	1	7	10	·048
Stores	1	3	3	·041
Wages	7	13	6	·269
Superintendence	3	0	0	·005
	£32	8	4	1·134

5·67 lbs. coal per unit generated.
4·095 galls. water ,, ,,

Note. This is a copy of the working for the corresponding week last year.

136. Five years ago there was no known case of a **central electrical** station burning less than 7 lbs. of coal per hour per Board of Trade electrical unit sold during the year, although in particular months the consumption was as low as 4 lbs. Many stations burned 12. Yet on a steady best load the engines and dynamos burnt only about 2·8 lbs. of coal per unit delivered by the station. The difference is mainly due to **variation of load** (see art. 149). Small engines, whose maximum indicated powers on full load were 12, 45, and 60, have been found by trial to burn 36, 18, and 8½ lbs. of coal, respectively per hour per indicated horse-power in their ordinary small factory use under altering loads in Birmingham.

Leaving out very exceptional tests, **the most favourable results** in test trials of steam per hour, per indicated horse-power, may be said to be 20 in non-condensing and 13½ in condensing engines. Assume 9 lbs. of steam per pound of coal and we have the most favourable coal results per indicated horse-power as 2·2 and 1·5.

EXERCISE. Assume a mechanical efficiency of 85 per cent. in condensing and of 90 per cent. in non-condensing engines, and calculate the figures usually supposed to be the most favourable yet found in ordinary testing. *Answers.* 2·47 and 1·77 lbs. of coal per brake horse-power hour.

As a matter of fact I may say that almost all our figures concerning actual or brake power are speculative, there are few numbers to be relied upon. I always feel doubtful of the accuracy of indicated power measurements, and very doubtful indeed if the speed is higher than 300 revolutions per minute (see Art. 47). In the following table of the best results from special trials of engines, N means non-condensing, C means condensing, 1, 2, or 3 mean single, compound, or triple expansion, S means that super-heated steam was used. J means jacketed. Under w, I give the numbers from the table, Art. 180, the number of pounds of saturated steam of the boiler pressure which a perfect steam engine (condensing or non-condensing) would use for 1 horse-power hour on the Rankine cycle.

When the pounds of coal are marked thus *, it means that only the steam was measured, and it is assumed that 1 lb. of coal would have produced 9 lbs. of steam. In most cases this means 10·7 lbs. from and at 212° F.

I have not included Prof. Ewing's results from a **Parsons' Steam Turbine** of 135 electrical horse-power; its consumption was 27·6 lbs. of steam (say 3·1 lbs. of coal) per electrical horse-power, which corresponds with a reciprocating engine using 20 lbs. of steam (or 2·2 lbs. of coal) per indicated horse-power (see also Figs. 56 and 57.)

A Laval Steam Turbine is said to have used 19·73 lbs. of steam, and 2·67 lbs. of coal per hour, per brake horse-power, a truly wonderful result.

The *Dow* Steam Turbine, the velocity of the circumference of its wheel being 9 miles per minute (25,000 revolutions per minute) is said to have used 55 lbs. of steam (at 85 lbs. per square inch) per horse-power hour. The steamship *Ohio*, 2,100 indicated horse-power, is said to have used on her trial trip in 1887, only 1·23 lbs. of coal per indicated horse-power hour. (See also Art. 221.)

SPECIAL TRIALS OF ENGINES.

	Character.	Indicated horse-power.	Piston speed in feet per minute.	Boiler pressure (absolute).	Steam in lbs. per indicated horse-power hour.	Coal in lbs. per indicated horse-power hour.	w lbs. steam per horse-power hour Rankine Cycle.
Semi-portable	N 1	5	263	76	65	6·5	21·6
Horizontal	N 1	10	238	75	31·8	3·5*	21·8
Willans	N 1	34	406	137	26·0	2·9*	16·3
Beam	N 1 S	78	335	62	28·5	3·2*	24·6
Corliss	N 1 S	134	606	111	22·0	2·2	17·5
Armington	N 2 J	84	499	132	25·3	2·8*	16·2
Willans	N 2	40	401	180	19·2	2·1*	14·2
Willans	N 3	39	400	187	18·5	2·1*	14·0
Willans	C 1	33	380	85	22·2	2·46*	9·10
Corliss	C 1 J	166	606	111	19·4	1·9	8·58
Sulzer	C 1 J	284	372	102	18·4	2·0*	8·74
Beam pumping	C 1 J	120	240	60	21·3	2·5*	9·87
Semi-portable	C 2 J	6	—	116	35·7	4·1	8·49
Willans	C 2	25	404	187	14·7	1·6*	7·72
Tandem Mill	C 2	888	442	102	17·8	1·78	8·73
Sulzer	C 2	247	493	100	13·35	1·5*	8·77
Marine *Ville de Douvres*	C 2	2977	442	121	20·77	2·32	8·42
,, *Fujiyama*	C 2	371	306	72	21·17	2·66	9·46
Beam pumping	C 2 J	252	237	114	13·9	1·5*	8·53
Willans	C 3	30	379	185	13·02	1·4*	7·73
Sulzer	C 3	360	—	160	11·70	1·3*	7·96
Marine engine, *Iona*	C 3 J	645	397	180	13·35	1·46*	7·77
Worthington pumping	C 3	260	164	95	14·10	1·66	8·88
Allis pumping (American)	C 3 J	574	203	136	11·68	1·39	8·23

137. The non-condensing trials of the **Willans Engine** gave the following results. Calculate the efficiency in every case, taking as the standard a perfect non-condensing engine, Rankine Cycle, see Table II., Art. 180, using the same kind of steam.

POUNDS OF STEAM PER INDICATED HORSE-POWER HOUR.

Pressure (absolute).	Perfect non-condensing engine. Rankine cycle.	Measured results.			Best results.	Percentage efficiency of perfect non-condensing engine.
		Single cylinder.	Compound.	Triple.		
40	35·5	42·5	—	—	42·5	83·5
70	22·7	30·8	—	—	30·8	73·5
90	19·62	27·7	24·25	—	24·25	80·9
110	17·65	26·0	22·0	—	22	80·1
140	15·75	—	20	—	20	78·6
150	15·28	—	19·5	19·8	19·5	78.3
160	14·88	—	19·2	19·0	19·0	78.4

EXERCISE. A good **locomotive** using steam of 160 lbs. pressure, uses 42 lbs. of steam per hour per horse-power; show that its efficiency is 0·354 as compared with a perfect non-condensing engine.

138. There are various ways of stating **Engine Performance.** One horse-power hour is 1,421 Centigrade heat units, or 2,558 Fahrenheit heat units. **It is usual** to rest content with "The engine uses 18 lbs. of steam per hour per indicated horse-power." Or "The engine uses 2 lbs. of coal per hour per indicated horse-power." If the steam is 100 lbs. steam (164° C.), and the feed-water was at 20° C. the heat given to produce 18 lbs. of steam was $18 \times (606{\cdot}5 + {\cdot}305 \times 164 - 20)$, or 11,457 units. Taking 8,300 units of heat as developable per pound of the coal, we have the following more correct ways of stating the performance.

I. Engine and boiler. 2 lbs. of coal per indicated horse-power hour, or 16,600 heat units (C.) per indicated horse-power hour, or 277 units (C.) per minute per horse-power. An efficiency of $1{,}421 \div 16{,}600$, or ·0856, or 8·56 per cent.

II. Engine. 18 lbs. of steam per indicated horse-power hour, or 11,457 C. heat units per indicated horse-power hour, or 191 units (C.) per minute per horse-power. An efficiency of $1{,}421 \div 11{,}457$, or 0·124, or 12·4 per cent.

III. Engine. A perfect heat engine, working between the temperatures 164° C. and 40° C. would have an efficiency $124 \div (164 + 274)$, so that our engine has $\cdot 124 \div \frac{124}{438}$ or 43·8

per cent. of the efficiency of the perfect heat engine, using the same temperatures.

IV. Engine. An engine using the Rankine Cycle (see Art. 214) between 164° C. and 20° C. would consume 7·6 lbs. of steam per horse-power hour. The efficiency ratio of our engine is 7·6 ÷ 18, or 0·42.

V. The above engine had a surface condenser, supplied with 918 lbs. of water per hour per indicated horse-power; this water entered at 15° C. and left at 25° C.; the condensed water left at 40° C., or 20° above that of the feed; therefore the heat rejected per hour per indicated horse-power was—

$$\begin{aligned} 918 \times 10 &= 9180 \text{ by condensing water,} \\ 18 \times 20 &= 360 \text{ by condensed water,} \\ &\text{The heat utilised is } 1421. \end{aligned}$$

So that we can account for the amount 10,961. Now the heat supplied, as we saw in II., was 11,457, and there is 496, or 4·3 per cent., to be accounted for by radiation and leakage.

It is very usual to merely measure the heat going off by the condensing water and to call it the whole rejected heat, and as we have 1,421 utilised we may say—

$$\text{Efficiency} = \frac{1421}{1421 + 9180} = \cdot 134.$$

A more correct plan is to take in the 360 also, and say—

$$\text{Efficiency} = \frac{1421}{1421 + 9180 + 360} = \cdot 129.$$

This is all that can be done if we only measure by the condenser water, unless we estimate the heat lost by radiation to be, say, 5 per cent. of what we measure from the condenser; this would give us 10,017 wasted altogether, so that the closer estimate would be—

$$\text{Efficiency} = \frac{1421}{1421 + 10017} = 0 \cdot 124, \text{ or } 12 \cdot 4 \text{ per cent.}$$

It will be observed that if we calculate from the feed-water or steam supplied, there is a doubt as to the wetness of the steam; and if we calculate from the condenser, there is doubt as to the amount of radiation and leakage.

It is quite a usual thing to say: let h be the Fahrenheit heat

units gained by the condensing water per minute per indicated horse-power, then the efficiency $= \frac{42{\cdot}63}{h + 42{\cdot}63}$.

A very perceptible saving is effected when the **feed-water** of a main engine is heated up to near the boiler temperature by the exhaust steam of auxiliary engines, such as are often used now to work air and feed and circulating pumps.

We cannot see our way to much improvement in the non-condensing steam engine; the performance often approaches 90 per cent. of what is theoretically possible, as may be seen in the table, Art. 136. This is by no means the case in condensing engines, but it does not seem practicable to expand steam to the low pressures which might give better results. There is a chance for a **binary vapour** engine; using steam at the higher temperatures and petroleum or ether for the lower temperatures. (See also the note Art. 214.) Cutting off the toe of the diagram as Mr. Willans called it, that is, releasing steam at a much higher pressure than the exhaust pressure, is a serious loss to put up with; but a good practical remedy is not yet known to us.

139. We may with a fair amount of accuracy say that a **large gas engine** burning Dowson gas uses at full load 85 cubic feet per effective horse-power hour. If the anthracite costs 25*s.* per ton, and we charge 15 per cent. per annum for interest and depreciation on total cost (we may take the total cost to be the same as that of a steam engine, boiler, &c., of the same power), then we find cost per hour in pence $= 5\frac{1}{2} + {\cdot}45$ I.

Since 1877 there has been a sale of 31,000 Otto engines in England and 16,000 in Germany, with a total brake power of 508,000 horses. The consumption of coal-gas used to be about 30 cubic feet of gas per hour per brake horse-power; now in a special trial it has been found to be as low as 14. There is much more improvement possible. There are now single-cylinder engines of 140 and double-cylinder engines of 220 horse-power. Even now, however, power from a 20-horse engine worked by coal-gas costs more than from a steam engine. In some electric-light stations working arc and incandescent lights the total expenditure in coal and coke in producing Dowson gas was only 3 lbs. per electrical unit for the first half of the year 1897. In a special test of two engines at Leyton during 5 hours, October, 1897, the following results were obtained: Output, 319 electrical units; anthracite per hour per indicated horse-power, 0·846 lb.; per brake horse-power, 0·975 lb.; per electrical horse-power, 1·152 lb.; per electrical unit, 1·543 lb.; coke per electrical unit, 0·225 lb. Total fuel per unit, 1·768 lb. I find that at Leyton the average total fuel per unit

generated from January to October of 1897 was 2·55 lbs. I do not know the load factor at Leyton, and therefore cannot compare this average with the 5·6 lbs. of coal per unit, which is the best yet achieved with steam engines having a load factor of 15 per cent. In steady running on full load there is no doubt that the **gas engine using Dowson gas** is already consuming not much more than half the coal per brake horse-power that is consumed in the largest and best steam engines, and that the cost of repairs and attendance is very much less than with steam engines.

140. The usually accepted figure for the result of burning 1 lb. of **town refuse** in the production of steam is 1 lb. of steam (nett, after deducting the steam used in the furnace) at 140 lbs. per square inch produced from feed-water, at 60° F. If an engine at full load uses 23 lbs. of this steam per electrical unit (1,000 watt hours). If a cell burns 0·25 tons of refuse per hour for 24 hours a day at a cost of 13¼ pence per ton (the labour part of this cost is 9¾*d.* per ton) including everything, what is the cost of steam per electrical unit, and what is the number of units produced per cell in 24 hours? *Answers.* 0·136 pence; 584 units.

There are several places in the British Islands where the fee simple of **water-power** of about 600 total horse-power with the necessary land may be bought for £6,000. The cost of utilising this power with turbines and dynamos, giving out usefully 70 per cent. of it, would be £5,000. Taking 10 per cent. of the total cost to represent wages, repairs, rates and taxes, depreciation, and interest, what is the yearly profit if one halfpenny per electric unit is paid, the load being full for 24 hours a day for 313 days in the year?

10 per cent. of £11,000 is £1,100 per year, the power given out being 70 per cent. of 600, or 420 horse-power. One horse-power is 746 watts, and 1,000 watts for 1 hour is called a unit.

$$420 \times \frac{746}{1000} \times 24 \times 313 = 2{\cdot}353 \times 10^6$$ electrical units per year.

Dividing these halfpence by 480 we find £4,902 per annum to be paid for the energy, and so the profit is £3,802 per annum.

141. The student will work exercises on **traction** such as he will find in a book on Applied Mechanics. The following figures may be remembered.

The resistance in pounds per ton of a **moving train** (including engine) on the level is found roughly by adding two to one quarter of the speed in miles per hour. This is for speeds greater than 20 miles per hour. At less speeds there is a different law which for

some trains and permanent ways may be indicated by the following figures:—

Speed in miles per hour . . .	0	$1\frac{1}{2}$	2	5	10
Resistance in pounds per ton .	20	10	7	5	6

A curved line adds 12 per cent. to the resistance on the average English railway.

In the best locomotives *on special trials* the best performances are 25 to 30 lbs. of steam (pressure 165 lbs. per square inch) per hour per indicated horse-power. In ordinary use the consumption is over 40 lbs.

EXERCISE. The average resistance of an **express train** on an English railway, as measured on the draw-bar between engine and train, is, say, 18 lbs. per ton at 45 miles per hour; the weight of the train (not including the engine) is 180 tons, what is the actual power?

Answer. 389 horse-power.

It has been found that in such a case the power actually exerted on the train is only 45 per cent. (in short express trains it is about 40 per cent., in slow goods trains as much as 75 per cent.) of the indicated power of the engine; what is the indicated power?

Answer. 864.

The consumption of steam is 40 lbs. per hour per indicated horse-power. How much feed-water must be provided for one-hour's run, neglecting leakage?

Answer. 15·4 tons.

If each pound of coal evaporates $8\frac{1}{2}$ lbs. of water, what weight of coal is used per hour?

Answer. 1·8 tons.

An American train is usually only two-thirds of the length of an English train for the same weight. For the same speeds the draw-bar force of traction of the English train being (in certain experiments) 6 lbs. per ton was only $3\frac{1}{2}$ lbs. per ton on the American, and yet the American road was not so good. The superiority was due to the construction of the American cars.

Wherever roller bearings have been tried they have greatly reduced the friction; the starting pull on a railway vehicle is sometimes as low as 3 lbs. per ton.

There seems to be no **electrical accumulator** which can be relied upon to discharge more than 7 watt-hours per pound of its total

weight, during a 5 hours' discharge. It is seldom that one finds a published statement on this subject which can be relied upon. In speculative calculation it is better to take only 5 watt-hours, or 15 horse-power hours per ton, the average rate of discharge being 3 horse-power per ton. But **in tramcar work** the discharge is sometimes three times this rate, and I shall take 9 horse-power per ton for $1\frac{2}{3}$ hours.

A tramcar when supplied with electrical power by trolley wire or by accumulators receives just about twice as much electrical power as the mechanical power actually utilised in propulsion. That is, the average power received may be calculated on an average tractive force of 60 lbs. per ton (at 8 to 10 miles per hour), instead of the 30 lbs. per ton, which it probably is on the average. It is not safe to take a better figure than this for the efficiency when one considers any new project. It is to be understood that this tractive force is not what would be measured in a trial at uniform speed. It is proportional to the average power divided by the average speed. The average power is greatly increased by stopping and starting, kinetic energy being created to be soon destroyed.

EXERCISE. A car to take 52 passengers worked by accumulators weighs with its electro-motor and gearing and fittings 7 tons empty, 10 tons fully loaded. Taking the tractive force to be 30 lbs. per ton at 10 miles per hour; taking the electrical power to be twice the useful, what is the weight of the accumulators? What is the electrical power? What would it be if it were supplied by a trolley wire? Take the discharge as 9 horse-power per ton.

Let x tons be the weight of accumulators. The tractive force is $(10 + x)30$, and the electrical power is $\frac{(10 + x)\ 60 \times 10 \times 5280}{33000 \times 60}$ or $1{\cdot}6(10 + x)$. But it is 9 horse-power per ton of accumulators, or $9x$, so that $9x = 1{\cdot}6(10 + x)$ or $x = 2{\cdot}16$ tons. We need 2·16 tons of accumulators discharging at the rate of 19·5 electrical horse-power. If supplied by a trolley wire only, 16 electrical horse-power is wanted. In fact, with accumulators, if W is the weight of the loaded car in tons $x = 0{\cdot}216\ W$, and the electrical power is $1{\cdot}95\ W$, whereas by trolley wire the power is $1{\cdot}6\ W$.

The tractive force on a tramcar was measured as 30·5 lbs. per ton. A similar car with roller bearings on the same road needed 25 lbs. per ton. The starting force for a tramcar is diminished by 20 to 60 per cent. by the use of roller bearings, and the general saving may be put down as 30 per cent.

The tractive force of a bicycle or any vehicle with **inflated tyres**

on a concrete road seems to be 30 lbs. per ton at 6 miles per hour, about 40 on wood pavement, and 40 to 60 lbs. per ton at 12 miles per hour on a good macadamised road, slightly wet; in heavy mud at 5 miles per hour, as much as 146 lbs. per ton has been registered.

These were towing forces; in **self-propulsion** it is understood that the resistances are considerably greater. The resistance per ton of a locomotive is considerably greater than that of the train. Speculative calculations ought to be based on the highest figures. The towing tractive force for **iron-tyred** passenger carriages on London roads when muddy seems to vary from 22 lbs. per ton (asphalte), 30 to 40 lbs. per ton (wood), 50 to 60 lbs. per ton macadam, to perhaps as much as 80 lbs. per ton on macadam new. A committee of the Society of Arts some time ago found 101 lbs. per ton on ordinary macadam, and 44·5 on macadam gravelled.

EXERCISE. It is found that the accumulators of the **electric cabs** (with pneumatic tyres) in London give out at the rate of 3 horse-power on smooth wooden roads, when going at 7 miles per hour, and 5 horse-power on macadamised roads; this is the average power up and down the London street gradients. Take 4 horse-power as the average. What is the average actual tractive force if only half the electrical power is utilised?

Answer. 107 lbs.

I do not know the actual weight of the cab, but take it that the cab and motor and gearing and fittings weigh 22 cwt., and that the accumulators gave out 5 watt hours per pound on a 5 hours' run. What is the total weight of the cab, and what is the average tractive force per ton?

Answer. $4 \times 5 \times 746 \div 5$, or 2,984 lbs. of accumulators, and 2,464 lbs. of vehicle, or 2·433 tons. The average actual tractive force is 44 lbs. per ton.

On the City of London Electric Railway, the weight of a train and locomotive and passengers being 36 tons, 5·4 electrical units were supplied in a journey of 5,550 yards, taking 15 minutes (including stopping). Check the following figures. Assume useful tractive power to be half the electrical; speed, 12·6 miles per hour; we find 0·047 electrical units per ton mile; tractive force, 12·0 lbs. per ton.

On the Montreal tramways, at an average speed of 7½ miles per hour (total load about 10 tons), 0·26 electrical units are used per ton mile. Assume the useful tractive power to be half the electrical, and find the average tractive force. *Answer.* 76 lbs. per ton.

It will be seen that this Montreal figure is much greater than the figure taken by me as more usual; but it is a figure taken often

by some of the most experienced of my friends, and we have so much inexact knowledge, that it is quite possible for this to be a better guide than the other.

142. Ship Propulsion. Up to the highest speeds of commercial ships we may assume without great error that, for vessels not dissimilar in form and character, and going at the usual speeds, the indicated horse-power is $I = D^{\frac{2}{3}}v^3 \div a$, when D is the displacement in tons, and v is the speed in knots, and a is constant, which for many classes of vessel may be taken as not very different from 240.

EXERCISE 1. If a vessel of 1,720 tons moves at 10 knots when its indicated horse-power is 655, what is the value of a in such a class of vessel? *Answer.* 219.

A vessel of the same class of 2,300 tons moves at 15 knots, what is the power? *Answer.* 2,680.

EXERCISE 2. Taking a as 240, a vessel of 6,000 tons going at 22 knots, what coal will it consume in a passage of 3,000 nautical miles, neglecting the effect of its lightening, if it uses 2 lbs. of coal per hour per indicated horse-power?

Answer. If an engine uses c lb. of coal per hour per indicated horse-power, the whole weight of coal consumed on a passage of s nautical miles, is $\frac{c}{a}\, sD^{\frac{2}{3}}v^2$ pounds. In this case it is 1,784 tons.

EXERCISE 3. For students after they read Art. 156. For a marine engine we have the rough and ready rule, "The speed v is proportional to the square root of the absolute boiler pressure and the amount of admission of steam." Show that if p_3 be taken as 11 per cent. of the boiler pressure p_1, the rough and ready rule is fairly true.

EXERCISE 4. Two boats of the same shape were driven, one by jet propulsion, the other by twin screws. The following results were obtained:—

Jet, 12·6 knots, with 167 I.H.P.; screw, 17·3 knots, 170 I.H.P. Compare the efficiency, if the displacements were as 100 to 65. *Answer.* As 0·51 to 1.

EXERCISE 5. During eleven sea voyages the average figures for R.M.S.S. *Britannic* (450 feet long) were:—

$D = 8{,}500$ tons, speed 15 knots, 4,900 indicated horse-power; show that $a = 287$.

EXERCISE 6. H.M.S. *Iris* has D = 3,290, speed 18·6 knots, $I = 7{,}714$; show that $a = 184$.

A torpedo boat $D = 29{\cdot}73$ tons, speed 22 knots, $I = 460$; show that $a = 222$.

EXERCISE 7. A ship whose displacement at starting is 6,000 tons.

uses 5 tons of coal per hour, producing 1 indicated horse-power for an amount of coal per hour which gradually increases and may be expressed as $c = 2 + \frac{t}{500}$. The value of a diminishes according to the law $a = 240 - \frac{1}{5}t$, where t is the time in hours from starting. How far has she gone, and at what speed is she going when her displacement is 4,000 tons? As $5t_1 = 6{,}000 - 4{,}000$, $t_1 = 400$ hours, where t_1 is the total time taken.

$$\text{As } 11{,}200 = \frac{2 + \frac{1}{500}t}{240 - \frac{1}{5}t}(6{,}000 - 5t)^{\frac{1}{3}}v^3$$

$$v = 13{\cdot}09 \times \left(\frac{1{,}200 - t}{2 + \frac{1}{500}t}\right)^{\frac{1}{3}} (6{,}000 - 5t)^{-\frac{1}{3}}.$$ Calculating v for many values of t, and using squared paper, it is easy to integrate it. I find the required $v = 13{\cdot}64$, distance 5,850 nautical miles.

In addition it is worth while giving some results for large steam ships. I am sorry to say that the horse-powers are not accurate.

	City of Rome.	*Umbria* and *Etruria.*	*Servia.*	*Kaiser Wilhelm der Grosse.*
Length of vessel in feet	543	500	515	625
Breadth	52	57	52	66
Displacement in tons	11,230	9,860	10,960	20,000
Indicated horse-power	11,890	14,320	10,300	27,000
Speed (knots)	18	20	17	22·5
Coal per day (tons)	185	315	205	500
Coal per indicated horse-power	2·2	2·1	2	1.73
Cylinders, diameter (ins.)	3 of 46″ 3 of 86″	1 at 71 2 at 105	1 at 72 2 at 100	2 at 52″ 2 at 90″ 4 at 96½
Stroke (ins.)	72	72	78	69
Pressure	105	125	—	178

EXERCISE 8. The engines of a ship when running steadily at a lower power are regulated rather by the lowering of the boiler pressure than by keeping the links permanently shifted and are found to use 2·13 tons of coal per hour when the ship goes at 15 knots and 1·18 tons when the ship goes at 10 knots; what coal does she use at 12 knots? As power is proportional to v^3, if C is the weight of coal burnt per hour, we know that C is a linear function of I (the Willans rule, Art. 148), and therefore

$$C = \alpha + \beta v^3$$

where α and β are constants and v is the speed in knots.

Applying the above figures we find $C = 0{\cdot}78 + {\cdot}0004v^3$. Hence at 12 knots $C = 1{\cdot}471$ tons per hour.

EXERCISE 9. The above ship is to make a passage with the greatest economy possible; what is the best speed?

If s is the passage in miles, the time taken is $\frac{s}{v}$ and the total coal consumed is $C\frac{s}{v}$, so that it is proportional to $\frac{0{\cdot}78}{v} + {\cdot}0004v^2$.

This is a minimum when $\frac{-0{\cdot}78}{v^2} + {\cdot}0008v = 0$, or $v^3 = 975$ or about 10 knots.

EXERCISE 10. If economy of coal is not all-important; suppose that the loss of every hour is valued at the worth of 0·6 ton of coal, what is the best speed?

The total loss per hour is now to be taken as represented in tons of coal, $0{\cdot}6 + 0{\cdot}78 + {\cdot}0004\ v^3$, or $1{\cdot}38 + {\cdot}0004\ v^3$.

The total loss in the voyage is proportional to

$$\frac{1{\cdot}38}{v} + {\cdot}0004v^2.$$

And this is a minimum when $v^3 = 1725$, or v almost exactly 12 knots.

It is worth while trying what the number representing the total loss in the voyage amounts to at other speeds, and I show it in the table. We see that to use a slightly different speed than the best is not very harmful.

v knots.	Number proportional to total loss in voyage.	v knots.	Number proportional to total loss in voyage.
10	·178	13	·174
11	·174	14	·177
12	·173		

EXERCISE 11. If a is 240, find the speeds of ships of from 1,000 to 10,000 tons when their displacements in tons are numerically equal to their horse-power. Write your answers in a table for easy reference.

For auxiliary engines the consumption of coal is about 10 tons per day in first class line-of-battle ships and 8 to $3\frac{1}{2}$ tons in cruisers.

143. The resistance to the motion of a ship is considered to be made up of two parts. 1. **The skin friction** in pounds $S = fAV^n$, where V is the speed in knots, n is 1·83 for varnished or painted wooden models or clean iron ships, A is the wetted area in square feet, f is ·009 for ships of over 200 feet long, and ·012,

·0106, ·0096 for ship lengths of 8, 20 and 50 feet. At speeds of 6 to 8 knots in ordinary vessels this skin resistance is about 80 or 90 per cent. of the whole; at high speeds it is about half the whole.

2. **A residuary resistance** due to the fact that **eddies** (the smaller part) and **waves** are produced. Eddy resistance is thought not to be more than 8 per cent. of the skin resistance even at high speeds. It is mainly caused by bluntness of the stern of a vessel. In two perfectly similar ships, similarly loaded, of lengths l and L, at speeds v and $v\sqrt{L/l}$, which are said to be the *corresponding speeds*, the residuary resistances are proportional to l^3 and L^3.

The skin resistances S_1 and s_1 of the ship and its model can be calculated from Froude's numbers given above. Hence if R is the resistance in pounds of a ship L feet long, A its wetted area in square feet, V its speed in knots, and if r and l are the resistance and length of a model which is exactly similar and of similar draught when the model is drawn at the corresponding speed v knots. Where $V : v :: \sqrt{L} : \sqrt{l}$, prove that it follows from the above that

$$R = \frac{L^3}{l^3} r - \cdot 009 A V^{1 \cdot 83} \left(1 \cdot 75 \frac{L^{\frac{1}{12}}}{l^{\frac{1}{5}}} - 1 \right)$$

if the ship is more than 200 feet long and the model is from 8 to 30 feet long.

Example.—Before building a vessel 400 feet long of wetted surface 26,000 square feet, we wish to know R, its resistance, at $V = 12$ knots. A model is made ten feet long, it is drawn at a speed of $12 \div \sqrt{40}$ or 1·9 knot in the tank, and its resistance r is found to be 0·9 lb. We find R to be 39,720 lbs.

Prove that R in pounds $\times$ V in knots $\div$ 307 = utilised horse-power. In this case we find 1,550 horse-power. The indicated power will probably be more than 3,000.

The vagueness of our knowledge as to the probable loss of power by friction makes any attempt to calculate R for the above purpose rather useless, and the better use of the tank would therefore seem to lie in helping to improve a particular class of vessel.

The following great **simplification** has recently been tried by **Colonel English**. Suppose an existing vessel to be run at various speeds and its indicated horse-power noted. Now assume that the effective horse-power in a new ship will be the same fraction of the indicated, that we take it to be in the existing ship—say one-half. Find the resistance of the existing ship at the speed V_1. We wish to know the resistance of the new ship at the speed V_2. We only need to

compare the wave and eddy resistances, which we shall call W_1 and W_2. **Make two models,** one of the existing and one of the ship being designed. Let the values of V, D, S, L, W for the two ships and the two models be indicated by capital and small letters, the existing ship and its model having the affixes $_1$.

S is skin friction; D is displacement, which in similar ships is proportional to the cubes of the lengths.

Let $v_1 = V_1\left(\frac{d_1}{D_1}\right)^{\frac{1}{6}}$, $v_2 = V_2\left(\frac{d_2}{D_2}\right)^{\frac{1}{6}}$, and let $v_1 = v_2$; that is, make the second model of such a size that V_2 and v_2, as well as V_1 and v_1, are "corresponding speeds," and yet that the speeds of the two models shall be the same. In fact $\frac{d_2}{d_1} = \frac{D_2}{D_1}\left(\frac{V_1}{V_2}\right)^6$. Now let the two models be towed from the two arms of a lever whose fulcrum may be adjusted and the **ratio of the resistances**, n, may be measured. Note that we need only find this ratio—a much easier thing to do than to find either resistance. Show that the total resistance of the new ship is—

$$S_2 + \left(\frac{V_2}{V_1}\right)^6 \left\{ n W_1 + \frac{D_1}{d_1}(n s_1 - s_2) \right\}.$$

Mr. Froude's estimate of the disposal of the whole indicated power of a marine steam engine was:—

Friction of engine, 26 per cent.; power wasted in driving air, feed and other pumps, 7; loss of power due to slip of screw, 9·1; friction of screw, 3·8; loss due to the greater resistance of a vessel when the propeller is working than when the vessel is towed, 15·5; power really effective in propelling the vessel, 38·7.

It is usually stated (on what experimental authority I do not know) that in modern ships the effective horse-power is 53 per cent. of what is indicated. In the first edition of this book, after a long description of tests of propellers made in France, I stated that a well-arranged propeller utilised $\frac{2}{3}$rds of the work actually given out by the engine. The mechanical efficiency of a good modern engine is ·85, and $\frac{2}{3}$ of ·85 is 56 per cent. Froude's idea was that the useful power was the fraction $\frac{38{\cdot}7}{66}$ of the useful power of the engine: this would give 50 per cent. as the probable ratio of useful propelling power to indicated power in modern steam engines.

Students will do well to keep the following figures in mind.

EXERCISE. **In 1845** a ship with a total machinery and coal load of 500 tons (besides its cargo and hull load of 1,000 tons more) going at 8 knots, its indicated power being 335, used 1 ton of coal per hour.

what was the amount of coal used per hour per indicated horse-power? *Answer.* 6·7. The total weight of boilers, engines, and other machinery was 120 tons, leaving 380 tons available for coal. What was the **indicated horse-power per ton** of machinery? *Answer.* 2·8.

What was the locomotive performance? *Answer.* $D^{\frac{2}{3}}v^3 \div I$ is nearly 200, where D is 1,500 tons, v is 8 knots, I is 335.

The ship could run at full speed $380 \div 24$, or 15·8 days, without coaling, a distance of $15{\cdot}8 \times 24 \times 8$ or 3,040 nautical miles.

Now in 1898 a ship with the same loading to run at 10 knots, its indicated power being 524, has a locomotive performance of 250. The total weight of its machinery is 50 tons, leaving a weight of 450 tons available for coal. What is the indicated power per ton? *Answer.* 10·5. It uses 10 tons of coals in the 24 hours. This is at the rate of $1\frac{3}{4}$ lb. of coal per hour per indicated horse-power. It can run for 45 days at full speed without fresh coal, a distance of 10,800 nautical miles.

With forced draught the power per ton of machinery is 12 in battleships, 30 in torpedo catchers.

144. Brake and Indicated Power. The actual horse-power delivered from the crank shaft of a steam engine (usually called the brake-horse-power) is less than the indicated power, because of friction. In mechanical laboratories it is almost always found that when we give power I to any machine and receive power B from that machine, there is some such law as—

$$B = cI - a \quad . \quad . \quad . \quad . \quad . \quad . \quad . \quad . \quad . \quad . \quad (1)$$

where c and a are constants.

In my book on Applied Mechanics I have considered this matter carefully, describing the methods of measuring mechanical power when it is being transmitted through belts or along shafts, and also when it is consumed by a brake for the purpose of measurement. When we test steam, gas, oil, electric, hydraulic, or other motors, we usually consume all the power given out: but whether we consume it or not, we are in the habit of calling it the actual or brake-horse-power. The total horse-power given to the engine by the steam pressing on the piston is I, the indicated power. The following specimens of the sort of results obtained ought to be plotted on squared paper, and the student ought to try for himself if there are some such laws as—

$$B = 0{\cdot}95\ I - 10, \text{ condensing} \quad . \quad . \quad . \quad . \quad . \quad (2)$$

$$B = 0{\cdot}95\ I - 5, \text{ non-condensing} \quad . \quad . \quad . \quad . \quad (3)$$

The engine, when working as a condensing engine, was supposed to be at full power at the highest load shown in the table. When working as a non-condensing engine the highest figure is supposed to be its full power; in this case the pumps were not working, and presumably this is what made the difference in the character of the laws.

Condensing.				Non-Condensing.			
I.	*B.*	*B/I.*	*F.*	*I.*	*B.*	*B/I.*	*F.*
50·5	40	·80	10·5	42·5	35	·82	7·5
38·5	30	·78	8·5	31	25	·81	6
29	20	·69	9	24	17·5	·73	6·5
17	10	·58	7	15·5	10	·65	5·5
8	0	0	8	5·5	0	0	5·5

If we denote by F the power lost by friction, it is evidently greater at greater loads. Possibly there is some such law as—

$$F = \frac{1}{20} I + 10, \text{ in the condensing trials.}$$

$$F = \frac{1}{20} I + 5, \text{ in the non-condensing trials.}$$

The frictional loss is therefore by no means merely proportional to the indicated or brake-power, and we always find from our tests of engines that if we for speculative purposes assume the frictional loss constant for all loads, we are not greatly in error. This is really to assume that c in (1) is unity. It is the great dead load of all the parts of the machinery, the flywheel, for example, which causes this result. Also, at the same speed the loss by friction due to mere inertia of the parts of the engine must be much the same for all loads. In well-made condensing engines we may take the loss as about 20 per cent. of the indicated power at full load, and in non-condensing engines as about 15 per cent. For the largest engines we may perhaps subtract five from each of thesefigures. A certain triple expansion engine has given 122 indicated and 107 actual—a mechanical efficiency of 88 per cent. There is usually more loss by friction in single cylinder engines than in double or triple.

If the frictional loss were really constant, it would be completely represented by taking a **constant back pressure as representing**

friction. Thus in an engine of the size described in the exercises of Art. 35, I find that if a back pressure of about 14 lbs. per square inch for a condensing engine and 10 lbs. for a non-condensing engine be added to the usual back pressures 3 and 17 of the indicator diagrams, we may speak of the calculated work or power as *actual* or *brake* work or power, instead of *indicated*. Hence the remarks made in Art. 37.

For speculative calculation the following back pressures may be fairly well taken as representing the effect of friction in well-made engines. p_1 is supposed to be the initial pressure of the steam used when the engine works with its greatest load. These numbers ought only to be used in academic problems. I know of engines whose friction is represented by back pressures of only about half these.

Condensing.		Non-Condensing.	
Greatest p_1.	Back pressure to take as representing friction at any load of the engine.	Greatest p_1.	Back pressure to take as representing friction at any load of the engine.
50	10	50	5
75	11	75	8
100	13	100	10
150	15	150	13
200	18		

In making such calculations, the results of which are only to be employed in rapid speculative (but not altogether misleading) calculation, let p_3, the indicated back pressure, be taken as 3 in condensing and 17 in non-condensing engines.

It is only in calculations like those of Art. 35 that I venture to use back pressure as representing friction. It is quite a common practice in finding the power necessary to drive some machine to take the indicated power of the engine when driving and when not driving the machine, and take the difference as representing the power given to the machine. This method may have its practical value, but it does not measure the power given to the machine, unless we assume the same loss by friction in engine and shafting in both cases.

We have very few actual power tests of large steam engines. Captain Sankey published a set from a Willans' engine capable of

developing 150 indicated horse-power (*Proc. Inst. C. E.*, 1893, discussion on Mr. Willans' Paper). Measuring from the published diagram I find

I. H.-P.	B. H. P.
104·5	94·5
49	38
12·5	0

I find that $B = 1{\cdot}03\ I - 13$, or $F = 13 - 0{\cdot}03\ I$.

Here we find less power spent in friction at a large load than at a small one. It is in contradiction to the sort of law found in all machines which I have ever examined, and shows how important such trials on large engines might be. It gives a very good excuse for the common practice of assuming that a constant back pressure may represent the friction of an engine. It will be noticed that at the highest load published, which is only $\frac{3}{4}$ of the full load of the engine, the mechanical efficiency is over 90 per cent. At the average load the friction would seem to be represented by a back pressure of only $4\frac{1}{2}$ lbs. to the square inch on the low pressure piston.

EXERCISE. The following measurements were made on a compound condensing engine; find the law connecting I and B; also check B/I.

I	288	223	136
B	249	189	108
B/I	·86	·85	·80

Answer. $B = {\cdot}922\ I - 17$.

EXERCISE. The high pressure cylinder of the above engine was used alone as a condensing engine, and the following results were obtained; find the law and check B/I.

I	153	109	55
B	128	88	38
B/I	·84	·81	·69

Answer. $B = 0{\cdot}93\ I - 13$.

EXERCISE. The high pressure cylinder of the above engine was used alone as a non-condensing engine. Here are the results:—

I	146	104	51
B	128	88	38
B/I	·88	·85	·74

Answer. $B = 0{\cdot}95\ I - 10$.

The frictional loss of energy must be divided quite differently in different classes of engines. The following is a rough average division sometimes supposed to exist:—

Crank shaft bearings and eccentric sheaves 1; valve if unbalanced 0·6; valve if balanced 0·05; piston and rod 0·4; cross head and slides 0·2; crank pin 0·14: total mechanical loss because condensation is used 0·3 to 0·5.

145. We are always glad when related things, about which calculations have to be made, are linear functions of one another, and when experimental numbers show that such a relation is nearly true, we take it to be really true. This is so in the following cases.

From the following results of experiments with a **gas-engine,** show, by plotting on squared paper and correcting for errors of observation, that if I is the indicated horse-power, B the brake horse-power, G the cubic feet of gas per hour, including what is used for ignition, then

$$G = 20{\cdot}3\ I + 8,\ G = 20{\cdot}4\ B + 45,\ B = I - 1{\cdot}8.$$

I.	B.	G.	G/I.	G/B.	Efficiency.
13·4	11·6	280	20·9	24·1	·166
10·2	8·4	216	21·2	25·7	·155
7·3	5·4	156	21·4	28·9	·138
4·6	2·9	104	22·6	35·8	·112
1·8	0	45	25·0	—	0

When we plot the values of G and I and of G and B on squared paper, we find points lying (speaking roughly) in straight lines.

Let the student fill in the columns showing G/I and G/B. Also from the brake horse-power, and knowing that one cubic foot of gas per hour means an actual supply of energy of a quarter horse-power, let him fill in the column of efficiencies. (The calorific power of one cubic foot of average coal gas may be taken here to be 530,000 foot-pounds.)

Again, taking the following experimental results from an **oil-engine** (1 lb. of oil being taken to give out 11,700 centigrade heat units in burning), I being the indicated, B the brake horse-power, and O the pounds of oil used per hour.

I.	B.	O.	O/I.	O/B.	Efficiency.
7·41	6·77	6·4	·86	·95	·128
8·33	6·88	6·8	·82	·99	·122
4·71	3·62	5·0	1·06	1·38	·088
0·89	0	3·1	3·48	—	0

Let the student show that $O = 0{\cdot}505\ I + 2{\cdot}62$, $O = 0{\cdot}52\ B + 3{\cdot}1$ and $B = 0{\cdot}98\ I - {\cdot}89$. Let him also fill in the columns O/I and O/B.

Prove that 1 lb. of oil per hour means 8·27 horse-power actually supplied, and fill in the column of efficiency as brake-power divided by supplied power.

A steam engine employed in driving a **dynamo machine** delivering electric energy to customers, each load being kept steady for four hours, each measurement being the average of the results obtained during the four hours. I is indicated horse-power; B the brake horse-power measured by a transmission dynamometer; the electrical horse-power E is obtained by multiplying ampères and volts to get the power in watts and dividing by 746; C lb. is the coal used per hour; and W lb. is the weight of steam used by the engine per hour. The governor acted upon the throttle-valve and not upon the cut off, and the boiler pressure altered.

I.	B.	Ampères.	Volts.	E.	W.	C.
190	163	1050	100	143	4805	730
142	115	730	100	96	3770	544
108	86	506	100	68	3080	387
65	43	219	100	29	2155	218
19	0	—	—	—	1220	—

First plot the values of I and W, I and B, E and B, I and C on squared paper. It will be found that there is approximately a linear law in every case. See if you get some such laws as—

$$W = 800 + 21\ I$$
$$B = {\cdot}95\ I - 18$$
$$E = {\cdot}93\ B - 10$$
$$C = 4{\cdot}2\ I - 62$$

Now produce a few more columns of numbers and study them. Give $W \div I$ and $C \div I$. Give $W \div B$ and $C \div B$. Give $W \div E$ and $C \div E$. Also give $W \div C$. Observe that practical engineers use occasionally every one of these methods of stating the performance of their plant.

Students may compare the above results with the following average measurements made at an **electric supply station** using several engines and boilers in 1891 :—

	I.	E.	W.	C.
Average for 7 hours, 11 a.m. to 6 p.m. . . .	80·3	57·1	3268	552
Average for 6 hours, 6 p.m. to midnight . .	227·7	163·2	7122	742
Average for 11 hours, midnight to 11 a.m. .	37	23·64	2143	232
Twenty-four hours, 11 a.m. to 11 a.m. . . .	97·3	68·3	3718	453

Here it will be found that although the load was varying, even when the averages for the 24 hours are taken with the others we have linear laws between I, E and W, $W = 1150 + 26{\cdot}25\ I$, and $E = {\cdot}72\ I - 2$. But C does not follow a linear law with the others. The reason lies in the fact that a spare boiler was used during part of the time, and there is consequently a greater consumption of fuel than if one or two boilers had been used the whole time. Since we have considered fuel consumption in the above exercises, it may not be out of place to introduce here some figures from the testing of a **water-tube boiler.**

Steam per hour from and at 100° C. per lb. of coal.	Coal per square foot of grate per hour. f.	Water evaporated per square foot of total boiler heating surface per hour. This is not reduced to 100° C.	w.
13·40	7·74	1·24	103
12·48	18·6	3·20	233
12·00	29·8	4·70	357
10·29	66·8	8·50	686

If w = steam per hour per square foot of grate, f = fuel per hour

per square foot of grate. Plotting w and f on squared paper, we find a fair approach to a linear law,

$$w = 45 + 9{\cdot}78f$$

or
$$\frac{w}{f} = \frac{45}{f} + 9{\cdot}78$$

Evidently also, the total steam per hour is a linear function of total coal per hour.

146. Work the following EXERCISES :—

1. In a spinning and weaving factory suppose each spinning frame to need 1 actual horse-power for every sixty spindles in it, and that each loom needs 2 horse-power to be actually supplied. What is the actual horse-power to be supplied in the following cases? Check the numbers in the table.

2. Suppose a steam engine to have the law

$$B = 0{\cdot}95\ I - 52$$

where I is the indicated and B the brake horse-power, and that it drives a dynamo which feeds motors which give out mechanical power P, such that P is 0·90 B.

Find the indicated horse-power when driving the following loads. Check my answers.

3. The above steam engine drives ordinary shafting which delivers power, P, to the spinning frames and looms, the friction being such that,

$$P = {\cdot}93\ B - 160.$$

Find the indicated horse-power when driving the following loads and so check my answers.

Spindles.	Looms.	Actual horse-power needed.	Indicated horse-power, electrical driving.	Indicated horse-power by shaft driving.
12,000	95	390	511	692
6,000	48	196	283	459
3,000	24	98	169	347

147. Two engines each with the law $W = 370 + 21{\cdot}6\ B$, where W is weight of steam per hour and B is brake power, are required to give out 70 brake horse-power. If x is the brake power given out by the first, and $70 - x$ by the second, find x that the total expenditure of steam may be a minimum.

Answer. The expenditure is $370 + 21{\cdot}6\,x + 370 + 21{\cdot}6\,(70 - x = 740 + 1{,}510 = 2{,}250$ lbs. per hour.

It is therefore of no consequence what proportion of the load comes from each if both must work. Of course if one alone can do all the work it only uses 1,882 lbs. per hour.

It is evident that if there are many engines, the best arrangement at any time is for all that are working (but one) to be working at full power, one at less than full power, the others at rest.

148. The following results of the numerous tests made by **Mr. Willans** on his condensing central valve engine (see Art. 236), which he used as a simple or a compound or as a triple expansion engine, are interesting. In every case he found that the plotted points representing W and I lay in a straight line, r and n being constant and p_1 variable. W is water per hour, I indicated horse-power, r the total ratio of expansion (intended by the valve setting; in the tables published by Mr. Willans the true values of r are given as measured on the diagram taking clearance into account). I find that, using the following values of r, all the compound trials fairly well satisfy the law:—

$$W = \beta + a\,I$$

$$\text{Where } \beta = 40 + \cdot0058\,(n - 100)\,(r + 3{\cdot}4)$$

$$a = 12{\cdot}34 + \frac{n}{10\,r} - 0{\cdot}0105\,n$$

CONDENSING TRIALS.

n.	r.	Value of W in terms of I.	Highest and lowest values of I in the trial.	
400	2	$70 + 23{\cdot}4\,I$	31·6 and 9·1	Simple.
400	3·45	$90 + 20\,I$	33·2 and 6·9	Simple.
400	2	$29 + 23{\cdot}8\,I$	33·6 and 11·8	Simple; steam much wire drawn before admission.
400	4·8	$54 + 15{\cdot}3\,I$	40 and 11	Compound.
300	4·8	$49 + 14{\cdot}7\,I$	31 and 7 6	Compound.
200	4·8	$45 + 15{\cdot}1\,I$	20 and 5·3	Compound.
100	4·8	$27{\cdot}5 + 16{\cdot}1\,I$	9 and 3	Compound.
400	10	$62 + 12{\cdot}8\,I$	33 and 12	Compound.
400	15·5	$75 + 11{\cdot}5\,I$	27·5 and 13	Compound.
300	15·5	$60 + 12{\cdot}2\,I$	20 and 10·6	Compound.
200	15·5	$50 + 13{\cdot}2\,I$	13·5 and 6	Compound.
400	12·3	$37{\cdot}5 + 11{\cdot}5\,I$	29·5 and 8·3	Triple.
300	12·3	$37{\cdot}5 + 11{\cdot}4\,I$	23 and 6·7	Triple.
400	20·6	$41 + 10{\cdot}9\,I$	22 and 9	Triple.

149. In an **electric light central station** it was found that when a steady load was maintained for 12 hours, all the engines and boilers at their full load, the total electric energy given out was 4,600 units (a unit is 1,000 watt hours, and one horse-power is 746 watts) and the total coal consumed was 6 tons. In regular working during each month of 720 hours, 44,200 units (on the average for a year) were given out for a consumption of 138 tons. Assume a linear law connecting coal and power and that it holds for average power as well as steady power (see my *Applied Mechanics*, Art. 77). What is the load factor of the station? *Answer.* $\frac{44200 \times 12}{4600 \times 720} = 0{\cdot}16$ or 16 per cent. What is the law connecting pounds of coal per hour C, and watts given out P? *Answer.* We have $P = \frac{4600 \times 1000}{12}$ or 383,000 watts for $C = \frac{6 \times 2240}{12}$ or 1,120 lbs. of coal per hour and $P = \frac{44200 \times 1000}{720}$ or 61,400 watts for $C = \frac{138 \times 2240}{720}$ or 430 lbs. per hour, and if there is a linear law it is easy to see that it is $C = 298 + {\cdot}00215\ P$.

EXERCISE. If the power factor sank to 10 per cent., or rose to 20 or 30 per cent. find the coal per unit. *Answer.* The full power is $\frac{4600 \times 1000}{12}$ or 383,000 watts. The above percentages would give 38,300, 76,700, 115,000 watts, as the average powers. Applying these in the formula we get the coal consumed. The other numbers in the following table are easily found. One unit means 1,000 watt hours.

	Power in watts. P.	lbs. of coal per hour. C.	lbs. of coal per hour per unit.
Full load	383,000	1120	2·9
Load factor 10% .	38,300	380	9·93
,, ,, 16% .	61,400	430	7·00
,, ,, 20% .	76,700	463	6·03
,, ,, 30% .	115,000	546	4·74

Since the above figures were given, all the steam-pipe arrangements have been simplified. More steam separators have been introduced. More precautions taken in regard to priming and leakage, and chimney draught has been greatly increased. The total output of the station has been increased, but there is about the same load factor, 16 per cent., as before. The full power of the station is now

520,000 watts, with an expenditure of 1,352 lbs. of coal per hour, and an average load of 83,000 watts, the coal is 482 lbs. per hour. Work out a table like the above one for the reformed conditions.

	Power in watts.	lbs. of coal per hour.	lbs. of coal per unit.
Full load	520,000	1352	2·6
Load factor 10% .	52,000	420	8·1
,, ,, 16% .	83,000	482	5·8
,, ,, 20% .	104,000	524	5·0
,, ,, 30% .	156,000	626	4·0

The law is now $C = 316 + \cdot 002\ P$.

150. In an **electric light** station the load varies greatly, but the change of load is so gradual that we can shut down one engine and boiler after another in an installation of many units; one engine only need be on light load at any time and we can gradually decrease the pressure in its boiler. Thus (except for the loss of heat due to the boilers) the engines are working nearly always under their best conditions and the losses are mainly due to the boilers. In an **electric traction** station or factory where the load is often changing greatly and quickly, in a few minutes or seconds, it is evident that we must keep the pressure in the boiler or boilers nearly constant unless the boilers are of very small capacity. Assuming any ordinary kind of boiler the pressure is nearly constant. The engine ought to be most efficient when working at its average load.

In the following case the law is not linear.

EXERCISE. The specification of an engine for an electric traction station, after a clause stating that three-quarters of the whole load might be thrown off or on suddenly without a greater fluctuation of speed than 5 per cent. above or below the normal speed, went on to say that at 30 per cent. of the full load not more than 25·3 lbs. of steam (at 165 lbs. absolute per sq. inch) was to be used per actual horse-power hour. At full load, or 400 actual horse-power, the consumption was not to be more than 16·5 lbs. of steam per horse-power hour. Now if the engine satisfied these conditions exactly, and was governed by the cut off, it would in all probability be working most economically when giving out 280 brake horse-power, using 15·73 lbs. of steam per hour per actual horse-power.

Suppose these three points given: draw approximately the curve showing steam per hour and actual horse-power. Suppose the

electrical power to be given out at a varying rate, which for the sake of simplicity I shall take to be shown by the sine law. Electrical power $= 250 + 150\ \sin qt$; and that the electrical power is 90 per cent. of the actual power, find the average weight of steam used per hour per electrical horse-power. *Answer.* 19·38.

Taking it that $8\frac{1}{2}$ lbs. of such steam is evaporated by 1 lb. of coal (this is the figure usually taken as true in London), what is the average amount of coal per hour per electrical horse-power? *Answer.* 2·28.

The average electrical power is 250. If this were steadily given out, the consumption of steam would be 16·2 lbs. per hour per electrical horse-power; whereas the two answers would be the same if the Willans law were true.

151. The tests at the small electric lighting station at Leyton in 1897 showed the following results, for E, the electrical horse-power, and C, the coal per hour for one **gas engine** and dynamo. Assuming a linear law, and that 45 electrical horse-power was the full load, find the efficiency with load factors of 40, 60, 80, and 100 per cent. on this

E	C
44	49
29	41

one engine and dynamo. (For experimental results on a whole station with many such engines, we have still to wait: they would, of course, be higher than these.)

The numbers give the law—

$$C = \frac{8}{15}E + 25{\cdot}5$$

We calculate the following values of C from the assumed values of E.

E	45	36	27	18
C	49·5	44·7	39·9	35·1
C/E	1·1	1·24	1·48	1·95
C per unit	1·47	1·66	1·98	2·61

152. When, as in most cases of **hydraulic work,** change of load means change of speed, there is quite a different connection than a linear law between useful and indicated power. In working with an engine, and pump, and accumulator at Marseilles, the energy given to the accumulator being called useful power, it was found that the frictional loss of engine and pump was 20 per cent. at slow speeds, and 30 per cent. at high speeds. In the lifting machines used, the useful work was 21 per cent. of the indicated work of the engine, or 44 per cent. of that of the pressure water. In a hoist with variable load, the useful work was 15 per cent. of the pressure water energy with a load of half a ton, and 60 per cent. with a load of 2 tons. This is of course mainly due to the dead weight of the cradle. The practical efficiency of any general system of hydraulic supply in towns is probably less than 50 per cent. for useful work ÷ indicated work.

153. EXERCISE. If H horse-power is supplied at one end of a line of pipes in a system of **hydraulic transmission,** the useful power coming out of the other end is—

$$U = H - aH^3,$$

where for a straight line $a = \cdot00374l/p^3d^5$, where l = length of pipe in feet, d the diameter in feet, and p the pressure in lbs. per square inch at entrance.

If $l = 10{,}000$ feet; pipes 6 inches diameter, or $d = 0{\cdot}5, p = 700$ lbs. per square inch. If the useful power H of the pump is—

$$H = 0{\cdot}7I - 25,$$

and if

$$C = 1{\cdot}25I + 225,$$

where I is the indicated power of the engine and C is the coal used per hour; find U for the following values of H, and also C, and calculate the efficiency in the form C/U. Plot C and U on squared paper.

Here $U = H - 3{\cdot}49 \times 10^{-6}H^3$.

C	I	H	U	C/U
448	178	100	96·5	4·65
537	250	150	138	3·90
626	321	200	172	3·65
716	393	250	196	3·65
811	469	300	206	3·94

It is noticeable here that the economy does not greatly alter when the useful load alters very much.

154. Exercise. If H is the horse-power given to an **electric conductor,** the useful power given out is—

$$U = H - aH^2,$$

where $a = 746R/v^2$, R ohms being resistance of the mains, and v the potential difference at the receiving end. Take $R = 0{\cdot}64$ (this is the resistance of about 4 miles of copper rod of one quarter of a square inch in section). Take $v = 1{,}000$ volts.

Then $a = 746 \times {\cdot}64/1000^2 = 4{\cdot}77 \times 10^{-4}$.

If the above values of H be taken and the same formulæ for C and H, we get another table interesting to compare with the above one.

It is easy to frame many other exercises showing how the economy of a system alters when the useful load is altered.

155. Mechanical Transmission. In transmitting power through contrivances in which there is approximately the solid friction law, as through successive machines of the same kind, or wire ropes and pulleys, &c., if we take the system as a continuous one; on the length δl let there be a loss of horse-power δP, and let $-\frac{dP}{dl} = a(P + b)$, where a and b are constants.

The rate of loss ab would exist if no power P were being transmitted, being due to the weight of parts of the transmission mechanism; due to the bending of ropes or belts, &c. Solving this, and letting U be the useful power transmitted to the distance l,

$$U = H - (H + b)(1 - e^{-al}) \quad . \quad . \quad .$$

or if $H - U$ is called F, the power lost,

$$F = (H + b)(1 - e^{-al}).$$

Exercise. Taking l to mean the number of the usual spans in a certain line of wire rope transmission, I find that $a = {\cdot}03$, $b = 60$, so that if we take $l = 12$ spans, that is, there is transmission for a distance of about 3,000 feet, we find $e^{-al} = 0{\cdot}6977$, which I shall call ·7.

$$U = H - (H + 60) \times {\cdot}3 = {\cdot}7H - 18,$$

whereas if there is transmission for 24 spans, $e^{-al} = \cdot 487$, which I shall call ·5, and we have—

$$U = \cdot 5\, H - 30.$$

It is interesting to imagine the above engine working one of these two systems, and then the other, and finding in each case the coal per useful horse-power delivered when it varies as in the other cases.

CHAPTER XVII.

THE HYPOTHETICAL DIAGRAM.

166. In Art. 32 I used the rough and ready rule of expansion pv constant. If a gas such as air is kept *at constant temperature* when it expands, it follows very nearly the law, pv constant. But the stuff we deal with is steam with water present, and even if it were air, it is not by any means at constant temperature. Indeed it is an astonishing thing that the rule, pv constant, should be so nearly true, and yet I have heard men speak of this law as "the theoretical law of expansion." What meaning can they attach to the word *theoretical?*

Exercise. Calculate the numbers in the second, third and fourth columns of the following table. When found, plot v and p on squared paper, or in some other way try to get an idea of the sort of departure we may sometimes expect from our rough and ready rule.

The pressures in the third column are calculated according to the formulæ $pv^{1\cdot130}$ constant, and in the fourth column $pv^{0\cdot9}$ constant.

Volume.	Pressure according to our roughly correct rule.	Pressure in a badly clothed cylinder, piston leaking.	Pressure in a steam-jacketed cylinder.
1	100	100	100
$1\frac{1}{2}$	66·7	63·2	69·4
2	50	45·7	53·6
$2\frac{1}{2}$	40	35·5	43·8
3	33·3	28·9	37·2
$3\frac{1}{2}$	28·6	24·3	32·4
4	25	20·9	28·7

In hypothetical calculations I use θ for temperature, p for pressure (absolute) in pounds per square inch, u for the volume in cubic feet of one pound of steam, v for volume in cubic feet in general, r for

the ratio of cut off; we cut off at $\frac{1}{r}$th of the stroke. I use affixes to letters, 1 to indicate admission, 2 to indicate the end of expansion, 3 the exhaust. Thus p_2 means the pressure at the end of the expansion, u_1 means the volume of 1 lb. of steam at the initial pressure, as given in the table, Art. 180.

In Art. 33 I asked the student to find graphically the mean forward pressure during admission and expansion to the end of the stroke, the back pressure being taken as 0. I call this p_m, **the effective pressure** being $p_e = p_m - p_3$, if p_3 is the back pressure. Instead of taking so much trouble, the student might have found the answer as—

$$p_m = p_1 \frac{1 + \log_e r}{r} \quad . \quad . \quad . \quad . \quad . \quad (1)$$

But if the law of expansion is pv^s constant,

$$p_m = p_1 \frac{s r^{-1} - r^{-s}}{s - 1} \quad . \quad . \quad . \quad . \quad . \quad . \quad (2)$$

EXERCISE. Comparison between the rules for the following values of s. It is a pity that one formula like (2) will not serve us for all values of s. But there is one case in which (2) is of no use to us, namely the most common case, where $s = 1$; let the student try for himself. He ought to calculate every one of the following numbers, taking $p_1 = 1$.

VALUES OF p_m FOR THE FOLLOWING VALUES OF s.

r	0·8	0·9	1·0	1·0646	1·1111	1·135	1·2
1·333	·972	·970	·965	·964	·961	·960	·959
1·5	·948	·941	·937	·934	·931	·930	·926
2	·872	·859	·846	·838	·833	·830	·823
3	·743	·721	·700	·687	·678	·674	·662
5	·580	·549	·522	·505	·496	·489	·475
8	·447	·414	·385	·369	·356	·352	·337
12	·351	·318	·290	·274	·265	·259	·246
20	·257	·225	·200	·186	·177	·173	·162

Proofs of the above Rules.

1. The student who knows a little calculus—surely it ought to be taught to mere beginners—knows that when a fluid of volume v and pressure p increases in volume by the very small amount δv, the work done by it is $p \,.\, \delta v$. If, then, fluid at v_1 and p_1 increases in volume to v_2, and if its law of expansion is $pv = p_1 v_1$, the total work done is

$$\int_{v_1}^{v_2} p \; dv, \text{ or } p_1 v_1 \int_{v_1}^{v_2} \frac{1}{v} dv, \text{ or } p_1 v_1 \log_e \frac{v_2}{v_1}.$$

If the pressure p_1 kept constant when the volume was increasing from 0 to v_1 the work done was $v_1 p_1$. If the back pressure is p_3 being constant, when the volume diminishes from v_2 to 0 the negative work done by the fluid is $p_3 v_2$ and hence the total amount in all is, if we indicate v_2/v_1 by the letter r,

$$p_1 v_1 + p_1 v_1 \log_e r - p_3 v_2.$$

Now if this is to be the same as the work done under a constant effective pressure p_e from volume 0 to volume v_2 and no back pressure, it ought to be equal to $p_e v_2$. Putting it equal and dividing by v_2, we find

$$p_e = p_1\left(\frac{1 + \log_e r}{r}\right) - p_3 \ldots\ldots (1)$$

II. If pv^s remains constant during expansion and s is not 1.
In the above proof,

$\int_{v_1}^{v_2} p.\,dv$ is $p_1 v_1^s \int_{v_1}^{v_2} v^{-s}.\,dv$, or $p_1 v_1^s (v_2^{1-s} - v_1^{1-s})/(1 - s)$, and hence

$$p_e = p_1(s r^{-1} - r^{-s})/(s - 1) - p_3 \ldots (2)$$

I nearly always use the first rule, but if I want to be more general I use $p_e = p_1 R - p_3$, where R stands for any of the numbers in the above table.

In hypothetical calculations nearly everybody uses the rough and ready rule pv constant. To help in calculating p_m, and indeed for other reasons, I give the table on the following page.

If the area of the piston is A square inches, l the length of the stroke in feet (twice the length of the crank), the steam supplied for one stroke is $\frac{A}{144}\frac{l}{r}$ cubic feet, or $\frac{Al}{144 r u_1}$ lbs. The work done in one stroke is $p_e Al$, and hence the **work done per cubic foot of steam** is, if expansion is according to the law pv constant,

$$144\{p_1(1 + \log. r) - p_3 r\}$$

It is easy to show that this is a maximum for given values of p_1 and p_3 when $r = p_1/p_3$.

The student must bear in mind that we are dealing with the hypothetical diagram. It is usually found that wire drawing, cushioning, and the effects of clearance, cause the real p_e of an indicator diagram to be smaller than our hypothetical p_e by, roughly, the fraction cr of itself, where c is the clearance as a fraction of the whole volume. Mr. Willans generally tabulated the ratio of his real p_e to the hypothetical p_e, and he called this ratio his *plant efficiency*, a name of which I do not approve. The plant efficiency would probably have been about 97 per cent. or more, only for clearance. He usually found it less than 90 per cent., often much less.

157. *Important Exercises on* **Regulation and Economy.**— The student will in the following cases (Art. 158) calculate p_e or

TABLE OF NAPIERIAN LOGARITHMS.

The Napierian or Hyperbolic Logarithm of a number may be obtained from the ordinary Logarithm of the number by multiplying by 2·3026.

n	log. n	n	log. n	n	log. n	n	log. n	n	log. n
1·05	·049	3·05	1·115	5·05	1·619	7·05	1·953	9·05	2·203
1·1	·095	3·1	1·131	5·1	1·629	7·1	1·960	9·1	2·208
1·15	·140	3·15	1·147	5·15	1·639	7·15	1·967	9·15	2·214
1·2	·182	3·2	1·163	5·2	1·649	7·2	1·974	9·2	2·219
1·25	·223	3·25	1·179	5·25	1·658	7·25	1·981	9·25	2·225
1·3	·262	3·3	1·194	5·3	1·668	7·3	1·988	9·3	2·230
1·35	·300	3·35	1·209	5·35	1·677	7·35	1·995	9·35	2·235
1·4	·336	3·4	1·224	5·4	1·686	7·4	2·001	9·4	2·241
1·45	·372	3·45	1·238	5·45	1·696	7·45	2·008	9·45	2·246
1·5	·405	3·5	1·253	5·5	1·705	7·5	2·015	9·5	2·251
1·55	·438	3·55	1·267	5·55	1·714	7·55	2·022	9·55	2·257
1·6	·470	3·6	1·281	5·6	1·723	7·6	2·028	9·6	2·262
1·65	·500	3·65	1·295	5·65	1·732	7·65	2·035	9·65	2·267
1·7	·531	3·7	1·308	5·7	1·740	7·7	2·041	9·7	2·272
1·75	·560	3·75	1·322	5·75	1·749	7·75	2·048	9·75	2·277
1·8	·588	3·8	1·335	5·8	1·758	7·8	2·054	9·8	2·282
1·85	·615	3·85	1·348	5·85	1·766	7·85	2·061	9·85	2·287
1·9	·642	3·9	1·361	5·9	1·775	7·9	2·067	9·9	2·293
1·95	·668	3·95	1·374	5·95	1·783	7·95	2·073	9·95	2·298
2·0	·693	4·0	1·386	6·0	1·792	8·0	2·079	10·0	2·303
2·05	·718	4·05	1·399	6·05	1·800	8·05	2·086	15	2·708
2·1	·742	4·1	1·411	6·1	1·808	8·1	2·092	20	2·996
2·15	·765	4·15	1·423	6·15	1·816	8·15	2·098	25	3·219
2·2	·788	4·2	1·435	6·2	1·824	8·2	2·104	30	3·401
2·25	·811	4·25	1·447	6·25	1·833	8·25	2·110	35	3·555
2·3	·833	4·3	1·459	6·3	1·841	8·3	2·116	40	3·689
2·35	·854	4·35	1·470	6·35	1·848	8·35	2·122	45	3·807
2·4	·875	4·4	1·482	6·4	1·856	8·4	2·128	50	3·912
2·45	·896	4·45	1·493	6·45	1·864	8·45	2·134	55	4·007
2·5	·916	4·5	1·504	6·5	1·872	8·5	2·140	60	4·094
2·55	·936	4·55	1·515	6·55	1·879	8·55	2·146	65	4·174
2·6	·956	4·6	1·526	6·6	1·887	8·6	2·152	70	4·248
2·65	·975	4·65	1·537	6·65	1·895	8·65	2·158	75	4·317
2·7	·993	4·7	1·548	6·7	1·902	8·7	2·163	80	4·382
2·75	1·012	4·75	1·558	6·75	1·910	8·75	2·169	85	4·443
2·8	1·030	4·8	1·569	6·8	1·917	8·8	2·175	90	4·500
2·85	1·047	4·85	1·579	6·85	1·924	8·85	2·180	95	4·504
2·9	1·065	4·9	1·589	6·9	1·931	8·9	2·186	100	4·605
2·95	1·082	4·95	1·599	6·95	1·939	8·95	2·192	1,000	6·908
3·0	1·099	5·0	1·609	7·0	1·946	9·0	2·197	10,000	9·210

$p_1 \dfrac{1 + \log_e r}{r} - p_3$ and the work done per stroke, multiplying by the number of strokes per minute and dividing by 33,000, to get the hypothetical horse-power. He will also calculate the weight of steam indicated per stroke (neglecting clearance) $Al/144rv_1$, and from this the weight per hour.

Missing Water. In working out the following important exercises on a **non-condensing engine,** the student will assume that the steam which is not indicated, that is, which is *missing* because of condensation in the cylinder or through leakage past valve or piston, is to be found by the following rule:—

$$y = \frac{\text{Missing steam}}{\text{Indicated steam}} = 15\,\frac{1+r}{d\sqrt{n^1}} \quad . \quad . \quad . \quad . \quad (1)$$

where r is the ratio of cut off, n^1 is the number of strokes per minute, d is the diameter of the cylinder in inches. Instead of 15 we might have as small a number as five in a well-jacketed, well-drained cylinder of good construction with four double beat valves, and we might have as great a number as 30 or even more in badly drained and unjacketed engines with slide valves.

I am not concerned just now with a **condensing engine,** but I may say that instead of (1) I am in the habit of using the rule (p_1 being the initial pressure)—

$$y = \frac{\text{Missing steam}}{\text{Indicated steam}} = \frac{120\,(1+r)}{d\sqrt{n^1 p_1}} \quad . \quad . \quad . \quad (2)$$

in academic problems on condensing engines. Instead of 120 I use numbers as small as 50 or as great as 300 or even more.

158. Non-Condensing Engine. n revolutions per minute means $n^1 = 2n$ strokes per minute in the following work, the engine being double acting; piston 12 inches diameter; crank 1 foot, so that $l = 2$, back pressure $p_3 = 17$ lbs. per square inch. Take u_1 from Table I., Art. 180. Calculate I the indicated horse-power, and W pounds the weight of steam used per hour. In Table II., Art. 180, I give the weight per hour of each kind of initial steam needed by a *perfect* non-condensing engine per horse-power. Look this up for each initial pressure and multiply by each horse-power to get W^1, which may be compared with W.

The student will plot W and I for all the cases on one sheet of squared paper. He will note that W is a linear function of I in two of the cases, and not in the other two (see Fig. 215). He ought to plot them on separate sheets of squared paper also, plotting W^1 (not done in Fig. 215) in each such case.

I. The pressure p_1 altering. 100 revolutions per minute, $r = 3$.

p_1	100	90	80	70	60	50	40	30
W	2200	1950	1743	1530	1350	1174	900	700
I.H.P.	71·9	62·3	52·9	43·4	33·9	24·4	14·9	5·42
W_1	1330	1220	1107	985	855	695	—	—

II. Cut off altering. $p_1 = 75$, $n = 100$.

r	6	5	4	$3\frac{1}{2}$	3	$2\frac{1}{2}$	2	$1\frac{1}{2}$
W	1030	1155	1340	1475	1650	1900	2270	2890
I.H.P.	24·2	30·5	37·9	41·8	48·0	54·8	62·8	72·0
W_1	530	665	830	910	1050	1200	1370	1570

III. Speed altering. $p_1 = 85$, $r = 3\frac{1}{2}$.

n	50	60	70	80	90	100	110	120	130	140	150
W	947	1090	1230	1370	1510	1650	1780	1910	2040	2170	2310
I.H.P.	25·9	31·1	36·3	41·5	46·7	51·8	57·0	62·3	67·2	72·6	77·7
W_1	525	630	735	840	945	1050	1150	1260	1360	1470	1570

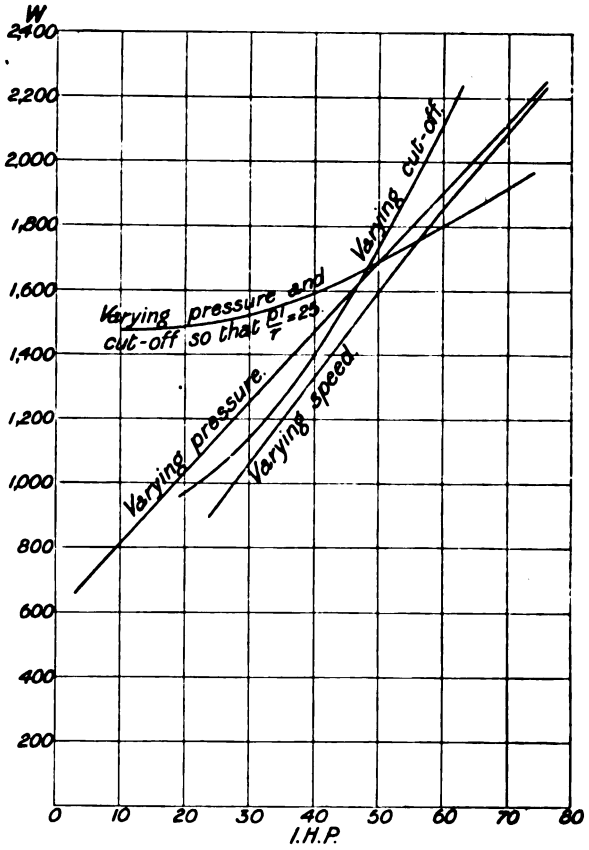

FIG. 215.

IV. Speed constant 100. The pressure and cut off altering both at the same time so as to keep $p_1 \div r = 25$.

p_1	25	50	75	100	125	150
r	1	2	3	4	5	6
W	1489	1537	1598	1675	1756	1836
I.H.P.	10·8	34·4	48·2	57·9	64·8	74·6
W_1	—	970	1050	1070	1080	1100

The student will note that if any point in any of these diagrams be joined to 0 the origin, the *slope* (or tangent of the angle of inclination) of the line represents water per hour per indicated horse-power. For any engine it always gets great with the smaller loads. It is only in the case of varying cut-off that there is a particular load giving maximum efficiency, and it is for this reason that whereas for central-station electric lighting work where the load alters slowly, many small engines are recommended, working most of them at full power; for electric traction central-station work where the load is constantly altering, only one or two engines are recommended, governing by the cut-off.

In a triple expansion engine even at full load there is much expansion; hence cutting off much earlier in the stroke will reduce the power without much gain of economy; in fact, there is a considerable range of load possible with much the same economy.

In a single cylinder engine, governing by the cut-off, at its greatest load there is a late cut-off; at small load, a very early cut-off; hence there is a very much greater gain in economy with less load than in compound or triple expansion engines. In all cases there is a great advantage in regulating by the cut-off, but it is more noticeable in single cylinder engines.

159. Condensing Engine. Sizes as in the last exercise, $p_3 = 3$.

$$y = \frac{\text{missing steam}}{\text{indicated steam}} = \frac{120\,(1+r)}{d\sqrt{np_1}}$$

If p_1 varies from 100 to 20, if $r = 3\frac{1}{2}$, $n = 100$, calculate W and I.

$$\frac{1+\log_e r}{r} = \cdot 644, \quad \frac{120\,(1+r)}{d\sqrt{np_1}} = \frac{4\cdot 5}{\sqrt{p_1}}.$$

$p_e = \cdot 644\, p_1 - 3$, so that $I = \cdot 874\, p_1 - 4$. Also steam W used per hour in pounds is $\frac{5333}{n_1}\left(1 + \frac{4\cdot 5}{\sqrt{p_1}}\right)$

p_1	W lbs.	I.
100	1775	83·4
80	1492	66·0
60	1199	48·4
40	887	31·0
20	542	13·5

160. We see various reasons for thinking that the following comparison is not altogether fair; but it is not altogether unfair. Anyhow, it is worth making.

Compare results from the above engine taken as a condensing and as a non-condensing engine; but instead of taking indicated power, which would be too unfair to the non-condensing engine, let us take actual or brake horse-power, assuming

$B = 0{\cdot}95\ I - 12$ in the condensing engine,
$B = 0{\cdot}95\ I - 7$ in the non-condensing engine.

p_1	Condensing. $r = 3\frac{1}{4}$.			Non-condensing. $r = 3$.		
	B.	W.	W/B.	B.	W.	W/B.
100	67·2	1775	26·4	61·3	2200	35·9
80	50·7	1492	29·5	43·3	1743	40·2
60	34·0	1199	35·2	25·2	1350	53·6
40	17·5	887	50·7	7·2	900	125
20	1·0	542	—	—	—	—

In pages 257–8 I give a number of characteristic results of engine tests. In each case the engine may be taken as working under its most favourable conditions.

In each case I compare the result with that of a *perfect* steam engine using the same kind of steam. It is right to distinguish between perfect non-condensing and condensing engines, because there are a great number of cases where a supply of water cannot be obtained for condensation purposes.

161. The Willans' Law. The calculations of Art. 158 for non-condensing engines lead to a linear law connecting indicated water per hour and indicated horse-power, if r is constant. We see the reason from the following algebra:—

$p_e = p_1 R - p_3$ where R stands for $\dfrac{1 + \log. r}{r}$ or the other function of r given in Art. 156.

n being strokes per minute, A area of piston in square inches, l being length of the stroke in feet, u_1 being volume in cubic feet of 1 lb. of the steam initially. If the actual total steam is z times the indicated steam, I being the indicated horse-power, and W lb. the weight of steam per hour—

$$I = (p_1 R - p_3)\frac{Aln}{33000} \quad \ldots\ldots\ldots\ldots \quad (1)$$

$$W = \frac{60 \,.\, Aln\, z}{144 r u_1} \quad \ldots\ldots\ldots\ldots\ldots\ldots \quad (2)$$

From $p_1 = 50$ to $p_1 = 200$ I find that with small error

$$\frac{1}{u_1} = \cdot 0171 + \cdot 0021\, p_1 \quad \ldots\ldots\ldots\ldots \quad (3)$$

(The student ought to try this as an exercise. He will find that it is not more than 1·3 per cent. in error for any pressure between 60 and 300 lbs. per square inch. See Ex. 10, Art. 128.)

Inserting this value of $\frac{1}{u_1}$, in the expression for W, and using, instead of p_1, its value from the first equation

$$p_1 = \frac{1}{R}\left(\frac{33000I}{Aln} + p_3\right) \quad \ldots\ldots\ldots\ldots\ldots \quad (4)$$

we find

$$W = \frac{29z}{nR}\left\{\cdot 00003\ Alnp_3\left(1 + 8\cdot 14\frac{R}{p_3}\right) + I\right\} \quad \ldots\ldots \quad (5)$$

This is of the form

$$w = \beta + \alpha I \quad \ldots\ldots\ldots\ldots\ldots\ldots \quad (6)$$

I usually take z to be 1 + our old y of Art. 159 + c^1r where c^1 is the clearance volume as a fraction of the working volume of the cylinder. It is evident that if y is of the shape (1) of Art. 159, or if it has any shape independent of p_1, we have a reason for the Willans' rule. In condensing engines z certainly seems to depend upon p_1 ; if we had an exact law it would be worth while using it in the above work, although the elimination of p_1 might not be so easy as before.

It is obvious that the indicated steam per hour is a linear function of I, if r is constant, whether clearance is neglected or not. In Mr. Willans' non-condensing trials we see in Art. 235 that y is not a function of p_1 and therefore the whole water per hour W is a linear function of I, which is the Willans' rule. I have found by careful trial that the missing steam in Mr. Willans' condensing trials is only in one or two cases approximately a linear function of I, and as the indicated water is such a function, the whole cannot be. Of course, the Willans' rule is only an approximation to the truth ; but when the missing water is small in amount, the discrepance is small, as the above algebra makes obvious. I would here warn students of the danger of assuming an empirieal law to be true much beyond the limits of the experiments on which it is based. I have read mischievous discussions as to the *meaning* of the Willans' rule *when I is negative!*

162. Exercises on Clearance. To see what is the effect of clearance the student cannot do better than work one or more exercises like the following. In an actual indicator diagram, we have cushioning. The actual weight of the steam present just before admission ought to be found; and the volume of an equal weight at the initial pressure ought to be subtracted from the volume of the clearance space itself to get the clearance which has the same amount of evil effect that we find in these exercises. But, indeed, this is a small matter, and there are other small matters which I might refer to, but there is no use in trying to get a hypothetical indicator diagram which shall represent the general case better than ours of Art. 156.

When the piston passes through $\frac{1}{r}$-th of its stroke let cut-off take place.

Let c be the clearance volume in terms of displacement of piston. Steam is really cut off at $1/r^1$th of its final volume, if

$$r^1 = (l + c)/\left(\frac{l}{r} + c\right) = r(l + c)/(l + cr).$$

If p_m is the mean forward pressure

$$p_1\frac{1 + \log.\ r^1}{r^1}(l + c) - p_1c = p_m l$$

$$p_e = p_1\left\{\frac{1 + \log.\ r^1}{r^1}\left(1 + \frac{c}{l}\right) - \frac{c}{l}\right\} - p_3 \quad \ldots\ldots \quad (1)$$

The work done in one stroke is p_eAl.

The volume of steam used in one stroke is $\frac{Al}{144r}\left(1+\frac{c}{l}r\right)$

Thus, taking $p_3 = 17$, $A = 112$ sq. in., $l = 2$ feet, $n = 100$, clearance 8 per cent., or $c/l = 08$, the student ought to find for many values of the cut-off, the indicated horse-power, I, and the weight, W lbs., of steam per hour—First, when $p_1 = 200$; second, when $p_1 = 150$; third, when $p_1 = 100$; fourth, when $p_1 = 75$; fifth, when $p_1 = 50$. For each case he ought to plot the curve connecting I and W with and without clearance. These tables of numbers will enable him also for a particular value of r, and letting p_1 alter, to plot I and W. Such curves carefully studied will give much useful information. We are neglecting all missing steam. Here is a sample table, $p_1 = 100$:—

r.	No clearance.		Clearance 8 per cent.	
	I.	W.	I.	W.
6	40	715	49	1060
5	48	860	56	1200
4	58	1070	64	1420
3·5	64	1230	70	1580
3	72	1430	76	1770
2·5	81	1720	84	2060
2	92	2140	94	2480
1·5	104	2860	105	3 00

EXERCISE.—In a triple expansion engine where the low pressure cylinder is nine times the volume of the "high," and where the clearance in the "high" is ·15 of its volume, what is the true fraction to take for clearance in comparison with a one-cylinder engine? *Answer.* ·0167.

The effect of clearance is probably sufficiently well illustrated, unless when r is large, by the simpler assumption that the clearance volume of steam is quite wasted, doing no work.

Thus, $p_e = p_1 \frac{1+\log r}{r} - p_3$,

and the volume of steam used per stroke is

$$\frac{Al}{144r}\left(1+\frac{c}{l}r\right)$$

I usually employ y to mean $\frac{\text{missing steam}}{\text{indicated steam}}$. It is evident that in hypothetical calculations, the effect of clearance is very nearly (except when r is large) to add a quantity $c'r$ to y, c' being the clearance volume as a fraction of the whole volume to which the steam expands.

163. The Best Cut-off. In putting before beginners the considerations which limit the value of expansion, I represent both Friction and Missing water by a back pressure. It is quite easy to see that if we might do so, then p_3 being the total back pressure, the best value of r is p_1 / p_3, and when this value of the expansion is used, the work done per pound of steam is $144u_1 p_1 \log. \frac{p_1}{p_3}$. A consideration of this, or of tabulated figures, such as a beginner can

work out for himself as in Chap. III., shows easily the great inherent advantages of using a small back pressure, and, consequently, of using condensation. It is easy now to understand my remarks in Art. 38. In the case of that engine, I took a back pressure of 10 lbs. per square inch to represent the effect of the missing water when one calculates work per pound or cubic foot of steam. As we then used steam of 100 lbs. per square inch, initial pressure, we ought to use the following values of r:—

CONDENSING ENGINE.

To get the most	per pound of	r ought to be
Indicated work	Indicated steam	$100 \div 3 = 33.$
Brake work	Indicated steam	$100 \div 17 = 6.$
Brake work	Actual steam	$100 \div 27 = 3{\cdot}7.$

NON-CONDENSING ENGINE.

To get the most	per pound of	r ought to be
Indicated work	Indicated steam	$100 \div 17 = 6.$
Brake work	Indicated steam	$100 \div 27 = 3{\cdot}7.$
Brake work	Actual steam	$100 \div 37 = 2{\cdot}7.$

If such exercises as those of Chap. III. are worked, and the results carefully studied, the beginner will learn a lesson which ought to be impressed almost more than any other on Steam Engine Engineers. The virtue of great expansion seems obvious to everybody at first sight. But it is evident that even if we only consider indicated power and indicated steam, we ought not to let expansion continue till the pressure falls below the back pressure p_3. It will be found that this will just not occur if $r = p_1 / p_3$. When we consider brake power and indicated steam, we ought not to let expansion continue till the pressure falls below $p_3 + f$, if f is the frictional back pressure, that is, $r = p_1 / (p_3 + f)$. When we consider indicated power and actual steam, we ought not to let expansion continue till the pressure falls below $p_3 + c$, if c is the number which to represent condensation enters into the calculation as if it were a back pressure. That is $r = p_1 / (p_3 + c)$.

When we consider actual power and actual steam,—and although we constantly forget it, this is more important than any of the others,—we ought not to let expansion continue till the pressure falls below $p_3 + f + c$, that is $r = p_1 / (p_3 + f + c.)$

In all cases we must cut off later if we want true economy rather than if we merely consider indicated power.

In fact, in the above example, to cut off very early, say at $\frac{1}{33}$rd of the stroke, is to the man who uses his mathematics in a foolish way, to get wonderful economy: we now see that we get the best results if we cut off at from $\frac{1}{3}$rd to $\frac{1}{4}$th of the stroke if the engine is condensing, and at from $\frac{1}{2}$ to $\frac{1}{3}$rd of the stroke if the engine is non-condensing.

There are many other matters forgotten by these men, who speak of their absurd notions as 'theory,' and so get true theory into disrepute—the most important is this;—even if by cutting off very early we did get greater work per pound of steam, this is only one kind of economy. There are other kinds to be considered, for instance, the interest and depreciation on the cost of a large engine, which one is using at much less than its full power: this is another consideration to make us cut off still later in the stroke.

164. I want to show now that it is not necessary to assume a constant back pressure as representing the friction of an engine when we calculate the best r; it is practically as easy to do the work when we take any usual linear law (Art. 144) as connecting B and I. I shall take the most general case.

If the **useful power** is to be delivered at the end of a **long line of shafting**, and especially if it is such that there is nearly as much friction whatever be the power transmitted, this friction of the shafting may be represented by a back pressure, and if we desire to get maximum useful power per pound of steam we must use a later cut-off in consequence.

Generally, if useful power $U = aI - b$ where I is the indicated power, a being less than unity—

$$\text{we had } I = \frac{p_e Al2n}{33{,}000} \text{ so that } U = a\frac{p_e Al2n}{33{,}000} - b$$

$$= a\frac{Al2n}{33{,}000}\left(p_e - b\frac{33{,}000}{aAl2n}\right)$$

so that the back pressure to employ in the calculation is $\frac{33{,}000b}{aAl2n}$, there being n revolutions per minute.

EXERCISE. In the engine of Art. 42, piston 12 inches, stroke 2 feet, 100 revolutions per minute, back pressure 17 lbs., initial pressure 100 lbs. per square inch, if we may venture to say, as we did in Art. 38, that missing water may be represented in economy calculations as a back pressure of $C = 10$ lbs. per square inch, and if, U being the power given out at the end of a transmission system,

$$U = \cdot 6I - 15 \quad \ldots\ldots\ldots\ldots\ldots\ldots \quad (1)$$

As $\frac{33{,}000}{2Aln}$ is 0·7366, (1) may be written

$$U = \cdot 6\frac{Al2n}{33{,}000}\left(p_e - \frac{15 \times 33{,}000}{\cdot 6 \times Al2n}\right)$$

$$U = \cdot 6\frac{2Aln}{33{,}000}(p_e - 18{\cdot}4).$$

The back pressure to use as representing friction is then 18·4. And we have the rules—

To get the most	per pound of	r ought to be
Indicated work	Indicated steam	$100 \div 17 = 5{\cdot}88$
Indicated work	Actual steam	$100 \div 27 = 3{\cdot}70$
Useful work	Indicated steam	$100 \div 35{\cdot}4 = 2{\cdot}82$
Useful work	Actual steam	$100 \div 45{\cdot}4 = 2{\cdot}20$

We see, in fact, that if x is any quantity such as "useful power," or "electrical power," or "yards of stuff woven" per hour, or any other which is a linear function of I so that $x = aI - b$, where a and b are constants; and if p_3 is the back pressure of the indicator diagram, and p_1 the initial pressure, and if β is $33{,}000 \times \frac{b}{2aAln}$, the cut-off which will give maximum x per pound of *indicated* steam is given by

$$r = p_1 \div (p_3 + \beta).$$

and per pound of actual steam $r = p_1/(p_3 + c + \beta)$.

165. In calculating the work done per pound of steam, my excuse for using a **back pressure** term (c) **to represent condensation** is this, that it represents known facts not much more unfairly than any other method, and it lends itself at once to an easy way of putting before a beginner the evil effects of attempting to get too much expansion. Even the student who takes up the subject in the more correct way of Art. 168 will be glad to use this c in thinking about practical problems.

I was led to its use in the following way. The late Mr. Willans, as the result of his great observation and experience, arrived at this rule for his own non-condensing engines, whether single cylinder or compound or triple expansion; —The indicated work done per actual cubic foot of steam is greatest when $r = \frac{p_1}{25}$. Mr. Willans gave a theory to explain the reasonableness of this rule, which was not correct in my opinion. The following way of looking at the matter is, I think, reasonable.

$$p_e \text{ being } p_1 \frac{1 + \log. r}{r} - p_3 \quad \ldots\ldots\ldots\ldots \quad (1)$$

p_1 being initial pressure, p_3 the indicated back pressure, say 17 lbs. per square inch in a non-condensing engine, r the ratio of cut-off; the work done in one stroke of length l feet, piston A square inches in area is $p_e A l$; the cubic feet of steam supplied to do this work being $\frac{l}{r}\frac{A}{144}$, we have w the indicated work done per cubic foot of steam as

$$w = 144 r p_e \quad \ldots\ldots\ldots\ldots\ldots\ldots \quad (2)$$

Now, because of condensation, we get less than this amount. Let the amount of work lacking per cubic foot of steam be x and write p_e as in (1), and we get

$$w = 144 p_1 (1 + \log. r) - 144\, r p_3 - x \quad \ldots\ldots\ldots \quad (3)$$

To make w a maximum by obtaining the best value of r we put $\frac{dw}{dr} = 0$, or

$$0 = \frac{144p_1}{r} - 144p_3 - \frac{dx}{dr} \quad \ldots\ldots\ldots\ldots\ldots (4)$$

But if the practical rule is correct this will agree with $r = \frac{p_1}{25}$ and inserting this value of r in (4) we are led to

$$144 \times 25 - 144p_3 - \frac{dx}{dr} = 0$$

$$\text{or } \frac{dx}{dr} = 144\,(25 - p_3)$$

or as $p_3 = 17$, $\frac{dx}{dr} = 1152$, $x = 1152r$ + constant. That is, the lacking work per cubic foot of steam is a linear function of r, the ratio of cut-off, a rule which cannot be said to be contradicted by experimental facts if we say that it can only apply within reasonable limits.

If there is no condensation, that is, if x is 0, (4) gives us the rule $r = p_1/p_3$, and it is obvious that our new rule is exactly as if instead of the ordinary back pressure $p_3 = 17$, we had an additional back pressure of 8 lbs. per square inch.

166. Since, then, my idea is in agreement with the practical rule adopted by Willans in his single-acting engine, it is worth while to see if it agrees with actual experiments on condensation in cylinders. I found that it did agree very well indeed with the results of Messrs. **Gateley and Kletch,** which I tried first because I thought them much more to be relied upon than any others ever made on the cylinder of a double-acting engine.

Thus taking condensation to be represented by a back pressure c we have, if w = work done per cubic foot of steam as above

$$w = 144\{p_1(1 + \text{log. } r) - r(p_3 + c)\} \quad \ldots\ldots\ldots\ldots (1)$$

But what an experimenter usually measures is x, the part of a whole cubic foot of steam which is missing at cut-off.

From this point of view, not using c,

$$w = (1 - x)144\{p_1(1 + \text{log. } r) - p_3 r\} \quad \ldots\ldots\ldots\ldots (2)$$

Putting (1) and (2) equal to one another we get, if $p_c = p_1 \frac{1 + \text{log. } r}{r} - p_3$,

$$c = p_c x \quad \ldots\ldots\ldots\ldots\ldots\ldots\ldots\ldots (3)$$

To test therefore the worth of my assumption, we must try under what circumstances we may consider $p_c x$ to be constant.

Gateley and Kletch (in 1884) testing an engine with a single unjacketed cylinder and Corliss' valve gear, d (the diameter of cylinder) being 18 inches; l (or twice the length of the crank) being 3·5 feet, obtained the following results. There was not much variation of speed.

On plotting the values of $p_c x$ for the engine when used as a condensing engine, on squared paper with p_1 as the abscissa, I found so fair an approximation to a straight line that I am convinced that there is almost no better way of representing these results than to take c as

$c = 0{\cdot}19p_1$ when condensing.
$c = 0{\cdot}08p_1$ when non-condensing.

Thus, therefore, to subject my notion to a rather severe test, I have calculated $p_e x \div p_1$.

p_1	p_3	r	n	p_e	x	c or $p_e x$.	$\frac{p_e x}{p_1}$
61·5	4·2	1·70	34	51·20	·227	11·6	·19
68·3	3·9	2·26	34	50·94	·271	13·8	·20
62·1	4·5	3·03	34	38·72	·339	13·1	·21
49·1	3·7	7·63	34	15·82	·501	7·9	·16
78·8	3·2	4·81	35	38·92	·352	13·7	·18
66·9	3·8	4·85	35	31·77	·478	15·2	·23
53·2	3·2	4·10	36	28·08	·369	10·4	·20
39·8	3·6	4·76	34	17·82	·414	7·4	·19
26·7	3·5	4·13	34	11·76	·412	4·9	·18
65·4	14·7	2·43	34	36·09	·109	3·9	·06
50·4	14·8	2·38	34	24·71	·235	5·8	·11
40·5	14·9	2·49	34	16·20	·159	2·6	·06
28·4	14·8	2·15	33	8·51	·273	2·3	·08

Any one accustomed to deal with such experimental results will say that the discrepancies in $p_e x/p_1$ from constancy are surprisingly small.

Messrs. **Emery and Loring** in their famous experiments in 1874–5 found that the best value of the cut-off was given by $r = 1 + \frac{p_1}{22}$. It will be found that for all values of p_1 above 35, this really corresponds to our using in the above method of calculation, a total back pressure

$$12\tfrac{1}{2} + \frac{1}{16}p_1.$$

167. As I have already said, **Mr. Willans** used a practical rule for best expansion in non-condensing engines (single, compound, and triple), which really comes to using a total back pressure of 25. I am sorry to say that I cannot test the rule by his non-condensing experiments, as in very few of them did he let p_1 and r vary independently. His single-cylinder results would point to using a c whose value is $42\frac{p_1 - 25}{d\sqrt{n}}$ (where $d = 14''$), only that we may just as well write $1050\frac{r-1}{d\sqrt{n}}$, since he varied r as well as p_1 and this last rule would upset my scheme. All his compound non-condensing results might point to some such rule as $c \propto \frac{p_1 r}{n}$.

I have not tried his condensing results, and I mention these facts here merely to warn a student that although the idea of a back pressure (independent of r) as representing for some purposes the effect of condensation and leakage, is exceedingly valuable when one is showing beginners the limitations in the value of much expansion; yet it is not sufficiently well established for us to use it for much more than this at present.

168. When we thought that the missing water might be regarded as if it were represented by a back pressure c, we saw that **the best cut-off** was given by

$$r = \frac{p_1}{p_2 + c},$$

and the maximum work that could be done per pound of steam was

$$144 u_1 p_1 \log. \frac{p_1}{p_2 + c}.$$

It seems more correct, and for some kinds of engine it must, I think, be more correct to calculate from the value of y, where

$$y = \frac{\text{missing steam}}{\text{indicated steam}}$$

If the total steam is z times the indicated steam, the work done per pound of steam is

$$144\, u_1 \{p_1(1 + \log. r) - p_3 r\} \div z \quad \ldots\ldots\ldots\ldots \quad (1)$$

This is a maximum when

$$z\left(p_1 \frac{1}{r} - p_3\right) = \{p_1(1 + \log. r) - p_3 r\} \frac{dz}{dr} \quad \ldots\ldots\ldots \quad (2)$$

Now let $z = \alpha + \beta r$, say, where α and β may be functions of p_1 and n, and we find

$$p_3/p_1 = \frac{1}{r} - \frac{\beta}{\alpha} \log. r \ldots\ldots\ldots\ldots\ldots\ldots \quad (3)$$

For given values of p_1 and p_3, α and β, it is easy to find by trial the best value of r. If this best value be used it is easy to see by inserting this value of p_3/p_1 in the work expression, that the work per pound $= \frac{144\, u_1 p_1}{\alpha} \log. r.$

I. When there is no missing water the work per pound is $144\, u_1 p_1 \log. r$. The value of r being p_1/p_3.

II. Non-condensing engine, probably $z = 1 + br$. The work per pound is $144\, u_1 p_1 \log. r$, and the value of r is given by

$$\frac{p_3}{p_1} = \frac{1}{r} - b \log. r.$$

This may be applied to the case where there is no condensed or leaking water, but there is a clearance volume, which is the fraction c^1 of the working volume of the cylinder, and we simply use c^1 instead of b.

If, again, y of Art. 157 is $\frac{Cr}{\sqrt{n}}$ we merely use $\frac{C}{\sqrt{n}} + c^1$ for b.

III. Condensing engine $z = 1 + \frac{br - a}{p_1^{\frac{1}{2}}}$ so that $\alpha = 1 - a p_1^{-\frac{1}{2}}$

$$\text{Work per pound} = \frac{144\, u_1 p_1 \log. r}{1 - a p_1^{-\frac{1}{2}}}$$

and the best value of α is given by

$$\frac{p_3}{p_1} = \frac{1}{r} + \frac{br}{\sqrt{p_1} - a}.$$

EXERCISE. In a non-condensing engine of a certain size at a certain speed, $z = 1\frac{1}{8} + \frac{1}{8}r$. Find r to give the best actual work per pound of steam, letting the friction of the engine be represented by a back pressure. Take $p_3 = 27$, $p_1 = 100$, find the best value of r, and the work per pound when this best value is used. For the best r,

$$\frac{1}{r} - \frac{1}{9}\log. r - \frac{27}{100} = 0.$$

Taking various values of r, and calculating the value of this expression, and using squared paper, I find that $r = 2{\cdot}646$ satisfies it nearly, and the work per pound is $128\ u_1p_1$ log. $2{\cdot}646$ or $124{\cdot}5\ u_1p_1$, or 54200 foot-pounds. Now if there were no condensed water the best value of r would be $3{\cdot}703$, and the work per pound of steam would be 82,000 foot-pounds.

By drawing a curve showing $\frac{1}{r} - \frac{1}{9}\log. r$ for various values of r on squared paper, it is easy to find those values of r which give to this the value $27/r$, and so we find the following other most economical values of the cut-off. I tabulate also r^1 as giving *indicated* work most economically, and it is interesting to compare them both with the Willans' rule. This shows why Case IV., p. 290, was so uneconomical with light loads.

p_1 . . .	200	150	100	75	50
r . . .	3·59	3·20	2·65	2·21	1·68
r^1 . . .	4·13	3·80	3·28	2·88	2·28
Willans' r	8	6	4	3	2

CHAPTER XVIII.

TEMPERATURE AND HEAT.

169. In the first part of this work I have usually expressed temperature on the Fahrenheit scale because all practical engineers use that scale. I am sorry that this should be so, as *scientific* men both of the English and other races, calculate in and think according to the Centigrade scale. To the average practical engineer, this is of no consequence because he cares nothing about Physical Science, and as he never calculates (except in that sense in which any shopkeeper may be said to calculate) he rather welcomes artificial obstructions to calculation, and it is astonishing how much obstruction is caused by that obnoxious 32°.

To the one or two engineers who are interested in science it does not matter either, because they use both scales readily; but it is of enormous consequence to young men trained scientifically, because even a small thing like this will gradually create a disinclination to keep up their acquaintance with physical science.

It is imperative that the young engineer should think in the scale which he practically uses, but the disadvantages of the use of either scale by itself are so great that during the writing of this book, all temperature measurements have been altered from one scale to the other four times. I have therefore come to the conclusion that in general heat problems I will use either scale indifferently and in practical steam engine problems I will incline rather to the use of Fahrenheit. I would use only the Fahrenheit scale if it were not that I want no readers who are ignorant of chemistry and physics, and they must have used only the Centigrade scale when studying those subjects. I am glad to say that I know of no science class

or text book on these subjects in which the Fahrenheit scale is used.

Steam from water boiling under atmospheric pressure is at a temperature called 100° C. or 212° F. The temperature of melting ice is called 0 °C. or 32° F. These two points being marked on a mercurial thermometer (and every beginner ought to make a thermometer for himself and graduate it and compare it at various temperatures with a good standard one), the volume between is divided into 180 equal Fahrenheit or 100 Centigrade degrees. Hence it is that if f is a Fahrenheit reading and c is a Centigrade reading for the same temperature

$$\frac{f-32}{180} = \frac{c}{100}$$

If this equation is remembered there is no difficulty in changing at once from one kind of reading to another. It may be written

$$c = \frac{5}{9}(f - 32) \text{ or } f = 32 + \frac{9}{5}c$$

Or, in words, 32° F. and 0° C. correspond; 212° F. and 100° C. correspond. Therefore subtract 32 from the Fahrenheit reading, multiply by 5, and divide by 9, and we have Centigrade reading. Or multiply Centigrade reading by 9, divide by 5, add 32, and we have Fahrenheit reading.

Any change in a reading Fahrenheit multiplied by 5 and divided by 9 gives the same change in the reading Centigrade.

To get absolute temperature Fahrenheit, add 460·7 to the ordinary reading. To get **absolute temperature** Centigrade, add 273·7 to the ordinary reading.

1. Convert the following readings to Fahrenheit. At atmospheric pressure mercury freezes − 39·4° C., ice melts 0° C., greatest density of water 4° C., blood heat 36·6° C., water boils 100° C., red heat 526° C., cast iron melts 1530° C.

Answers. − 38·9° F., 32° F., 39·2° F., 97·9° F., 212° F., 969° F., 2786° F.

2. What is the C. equivalent to a difference of temperature of 15 on the F. scale? *Answer.* 8·33.°

Change the following readings:—Polished steel is of a deep blue colour at 580° F., pale straw colour at 460° F.; sea water freezes at 28° F. *Answers.* 304·5° C., 237·75° C., −2·2° C.

Change the following Centigrade temperatures and quantities of heat (see Art. 175) to the Fahrenheit scale.

	Boiling points at atmospheric pressure.	Latent heat of vapour, above atmospheric pressure.	Ratio of volume of vapour to volume of liquid per pound.
		Centigrade heat units.	
Sulphur	444·5° C.	—	—
Mercury	350	62	—
Oil of turpentine	159·3	74	193
Water	100	536	1696
Alcohol	77·9	202	528
Bromine	58	45·6	—
Bisulphide of carbon	46·2	86·7	—
Ether	34·9	90·4	298

170. The **latent heat** of fusion of ice is 79 Centigrade heat units or 142 Fahrenheit. I would give a table of the latent heats of fusion of some other substances, but inasmuch as good authorities give quite different numbers it seems on the whole better to leave them out altogether. Rankine gives 500 as the latent heat of fusion of tin and Box gives 26·6. Rankine gives 148 for spermaceti, Box 46·4. M. Person gives the empirical formula for substances generally

$$L = (K_2 - K_1)\,(\theta°\text{C} + 160)$$
$$\text{or } L = (K_2 - K_1)\,(\theta°\text{F} + 256)$$

where K_1 and K_2 are the specific heats in the solid and liquid states and θ the temperature of fusion at atmospheric pressure, L, the latent heat of fusion. Regnault's latent heat of steam is in Centigrade units

$$L = 605{\cdot}6 - 0{\cdot}695\,\theta - 3{\cdot}3 \times 10^{-7}\,(\theta - 4)^3$$

change this to Fahrenheit. *Answer.* $L = 1091{\cdot}7 - 0{\cdot}695\,(\theta - 32) - 1{\cdot}03 \times 10^{-7}\,(\theta - 39)^3$.

Commonly we use in Fahrenheit units

$$L = 966 - 0{\cdot}7\,(\theta - 212) \text{ or } 1092 - 0{\cdot}7\,(\theta - 32) \text{ or } 1114{\cdot}4 - 0{\cdot}7\,\theta \text{ or } 1436{\cdot}8 - 0{\cdot}7\,t$$

change these to Centigrade units and also to foot-pounds.

Rankine's formula for saturated steam, p being in lbs. per square foot, and t the absolute temperature Fahrenheit ($t = \theta°\text{ F.} + 460{\cdot}7$), is

$$\log_{\cdot 10} p = 8{\cdot}28203 - \frac{B}{t} - \frac{C}{t^2}$$

$$\text{where } \log_{\cdot 10} B = 3{\cdot}441474, \quad \log_{\cdot 10} C = 5{\cdot}583973$$

alter these to Centigrade and pounds per square inch.

Many temperatures are stated in this book, sometimes on the Fahrenheit, sometimes on the Centigrade scale; convert them into the other scale. For example test the numbers given for temperatures in the Tables, Art. 180. It will be observed that I use θ for the ordinary and t for the absolute temperature on either scale.

171. Expansion of Solids and Liquids. The linear expansion of bodies by heat is practically proportional to the rise of temperature. The values of a, the co-efficient for linear expansion (the fractional increase in length for a rise in temperature of 1° Centigrade), are supposed, I have no doubt quite incorrectly, to be the following numbers divided by 10^5:—Aluminium, 2·34; copper, 1·79; gold, 1·45; iron, 1·2; lead, 2·95; platinum, 0·9; silver, 1·94; tin, 2·27; zinc, 2·9; brass (71 copper to 29 zinc), 1·87; bronze (86 copper to 10 tin to 4 zinc), 1·8; German silver, 1·8; steel, 1·11; brick, 0·5; glass, 0·9; granite, 0·9; sandstone, 1·2; slate, 1·04; boxwood (across the fibre), 6·1; boxwood (along the fibre), 0·3; oak (across), 5·4; oak (along), 0·5; pine (across), 3·4; pine (along), 0·5.

The co-efficient, k, of cubical expansion is three times the co-efficient of linear expansion, because $(1+a)^3 = 1+3a$, is practically correct for these small values of a. The average values of k between 0° and 100° C. are the following numbers divided by 10^3:—Alcohol, 1·26; mercury, 0·18; olive oil, 0·8; petroleum, 1·04; pure water, 0·43; sea water, 0·5. Column 7 of the table, Art. 180, gives more exactly the volume of water when subjected to the pressure corresponding to its temperature.

The student is supposed to have worked many exercises like the following ones:—

1. Steel rails at 0° C. have an aggregate length of 1 mile. What is the length at 33° C.? *Answer.* 1 mile 23·2 inches.

2. A vertical column of water 12 feet high is heated from 4° C. to 210° C. under steam pressure. If its section remains constant, what is its increase in length? *Answer.* 2·06 feet.

3. A cylindric plug of copper just fits into a hole 4″ diameter in a piece of cast iron. After heating the mass to 1240° C. by how much is the diameter of the hole too small for the plug? *Answer.* ·0293 inches.

4. A bar of iron is 70 centimètres long at 0° C. What is its length in boiling water (100° C.)? What is its length at 50° C.? *Answer.* 70·084, 70·042.

5. Two rods, one of copper, the other of iron, measure 98 centimètres each at 0° C.; what is the difference in their lengths at 57° C.? *Answer.* ·033 *cm.*

6. Rails of wrought iron each 30 feet long are laid down at the temperature of 10° C. What space is left between every two, if they are intended to close up completely at 40° C.? *Answer.* 0·13 inch.

7. A wrought iron connecting rod is 12 feet long at 10° C. What is its increase in length at 80° C.? *Answer.* 0·121 inch.

8. An iron Cornish boiler 33 feet long, the shell at 0° C., the flue at 100° C.; what would the difference of length be if the flue were not prevented from expansion? *Answer.* 0·475 inch.

9. A steel pump rod 1,000 feet long, what is its change of length for a change of 10 Centigrade degrees? *Answer.* 1·33 inch.

10. In a thermometer ·01 cubic inch of mercury at 10° C. is raised to 15° C., and rises 1 inch in the tube. What is the cross-section of the tube? *Answer.* 9×10^{-6} square inch.

11. The volume of a mass of iron being 5 cubic feet at 10° C., find its volume at 80° C. *Answer.* 5·0126 cubic feet.

172. Expansion of Gases. Many gases follow closely a law which is said to be the law for a perfect gas, namely, that if a quantity of gas at the volume v_0, pressure (absolute, that is, a vacuum is the zero), p_0, and absolute temperature, t_0, changes to v, p, and t, then

$$\frac{vp}{t} = \frac{v_0 p_0}{t_0}$$

When we deal with 1 lb. of gas, the constant quantity, vp/t, is called R, and it has the values given in Art. 187 for various gases, v being in cubic feet, p being in lbs. per sq. foot, and t being absolute Centigrade temperature. When we deal with any other quantity than 1 lb. of stuff, or any other units of pressure and volume, pv/t remains constant, but this constant is no longer the R of the table.

EXERCISES.

1. A cubic foot of gas at 27° C. is heated to 137° C., and an invariable pressure is maintained by using a movable piston in a tube from the containing vessel; what is the new volume? *Answer.* 1·367 cubic feet.

2. If in the last question the pressure becomes half what it was before (shown by using the proper weights in loading the piston); if it becomes twice as great, or if its new pressure is to its old as 4 : 3, what are the corresponding volumes? *Answer.* 2·734, 0·683, 1·0252.

3. Air goes into a furnace at 16° C., and reaches the chimney at 903° C. The chimney contains 2,200 cubic feet of this hot air: what

is the difference between the weight of this hot air and of an equal bulk of cold air? A cubic foot of air at 0° C., and at the ordinary pressure, weighs ·0807 lb. *Answer.* 126·5 lbs.

4. 500 litres of hydrogen at 60 C., and a pressure of 750 millimètres, being cooled to 20° C. under 840· mm., what is the new volume? *Answer.* 392 litres.

5. 100 cubic feet of steam at 100° C., and 15 lbs. pressure, is heated to 160° C. at 17 lbs. pressure: what is its volume? *Answer* 102·4 cubic feet. The student will notice that the steam is superheated.

173. The following measurements of pressure and volume were made upon a **gas engine diagram** in 1883 from the beginning of the compression until the exhaust opened. Assuming that the amount of stuff remained constant, and that it behaved like a perfect gas throughout, find the temperatures.

The actual scales of v and p are unimportant. The temperature, 120° C., where $v = 25$ before compression began, is the only temperature known beforehand; calculate the temperature at every other point. One of my students found the following answers:—

Compression			Ignition and expansion.	
v.	p.	θ° C.	p.	θ° C.
10	45·2	210	45·2	210
10·4	—	—	123·2	1096
10·6	—	—	157·7	1515
10·8	—	—	181·7	1825
11	39·7	194	188·2	1943
12	35·7	185	166·2	1860
13	32·2	175	146·2	1759
14	29·7	171	129·7	1669
16	24·7	150	105·7	1536
18	21	131	87·2	1406
20	19·5	144	74·2	1308
23	—	—	58·7	1171
25	14·7	120	—	—

Plot the values of p and v to scale on squared paper.

Plot also the values of the temperature and of v.

Plot also log. p and log. v on squared paper to see if the expansion curve follows any such law as pv^s = constant. Also see if the compression curve follows some such law. Some of my students plot also temperature and time, assuming simple harmonic motion and 150 revolutions per minute.

174. EXERCISE. It is sometimes said that the weight of a cubic foot of steam is about §th of the weight of a cubic foot of air at the same temperature and pressure. This is fairly true except with high pressure saturated steam. But for high pressure steam, if we want an easy rule of this kind we had better use ·6546 instead of §. Calculate the volume of 1 lb. of air at each of the following pressures and temperatures; divide by ·6546, or multiply by 1·528 and compare with the values for steam taken from the table, Art. 180. If we use p in lbs. per square inch we must divide 95·67 (the R given for air in Art. 187) by 144; multiplying by 1·528 we get the volume of ·6546 lb. of air as $v = 1{\cdot}015\ t/p$. Use $t = \theta + 273{\cdot}7$.

Temp. θ° C.	Pressure in lbs. per sq. inch.	Volume of 1 lb. of steam from Table 180.	Volume of 1·528 lb. of air.
100° C.	14·70	26·43	25·8
120° C.	28·83	14·04	13·9
140° C.	52·52	7·993	7·99
160° C.	89·86	4·828	4·90
180° C.	145·8	3·065	3·16
200° C.	225·9	2·030	2·12

175. The Measurement of Heat. This subject must remain quite unknown to all students who get their information by mere reading. What I write is merely to remind students of some of the facts learnt by them in their study of heat.

Heat which is measured by C units on the Centigrade scale is F units on the Fahrenheit scale if $\frac{C}{100} = \frac{F}{180}$. To convert heat into foot-pounds we multiply by Joule's equivalent, which is 774 or 1,393.

EXERCISE 1. A unit of heat is the heat given to 1 lb. of water to raise its temperature 1° Centigrade; what is the heat required to raise 3 lbs. of water through 30 of the F. degrees?

Answer. 50 centigrade heat units.

EXERCISE 2. The latent heats of 1 lb. of water and 1 lb. of steam (at atmospheric pressure) are respectively 79 and 537 Centigrade units; convert these into Fahrenheit heat units.

Answer. 142 and 967 units.

EXERCISE 3. How many Fahrenheit and Centigrade heat units (as used by Regnault) per second and per minute correspond to 1 horse-power?

Answer. 0·712, 42·75 Fahr.; 0·396, 23·75 Cent.

For academic exercise work the student may use the following

numbers. The heat energy required to raise m lb. of any solid or liquid substance n degrees in temperature is mns units of heat if s is **the specific heat** of the substance as given in this table.

Substance.	Specific heat	Substance.	Specific heat.
Brass or bronze	0·088	Aluminium	0·214
89 copper + 11 aluminium	0·104	Copper	0·092
German silver	0·095	Gold	0·030
Rose's and Wood's alloys	0·036	Cast steel, hard	0·119
Glass (crown)	0·161	,, soft	0·117
,, (flint)	0·117	Rolled steel	0·116
Wood	·5 to ·7	Iron (wrought)	0·11
Ice	0·5	,, (white cast)	0·13
Carbon	·25	,, (grey cast)	0·122
Coal	·2 to ·25	Lead	0·03
Olive oil	0·471	Mercury	0·033
Petroleum	0·511	Platinum, 0° to 1000° C.	0·032
Sea water	0·938		

GASES AT CONSTANT PRESSURE.

Air	·238
Oxygen	·218
Hydrogen	3·406
Superheated steam (doubtful)	·37 to ·48
Carbonic oxide	0·245
Carbonic acid	0·216

The specific heats of some other gases are given in Art. 187. In the case of very expansible bodies like gases it is very important to note that heat given during a change of state depends on something more than on the change of temperature. C_p of Art. 187 means the specific heat if the pressure is constant, C_v if the volume is constant during the rise of temperature.

Example. 3 lbs. of mercury at 96° C. is thrown into 2 lbs. of water at 5° C.; what is the temperature of the mixture?

Let x° C. be the common temperature. The water rises through $x-5$° and therefore receives $2(x-5)$ units of heat. The mercury falls $96-x$° and therefore gives out $3(96-x)\times\cdot033$ units of heat. Putting these quantities equal we have $2(x-5)=3(96-x)\times\cdot033$, and we find $x=9°\cdot33$ C.

Example. 1 lb. of iron at its welding-point, 1,500° C., is thrown into 100 lbs. of water at 0° C.; find the temperature of the mixture. Let x° be the temperature of the mixture, and since about ·122 is the mean specific heat of iron $(1,500-x)\times\cdot122=x\times100$, from which $x=1°\cdot83$ the answer.

EXERCISES.

1. A ton of air at 630° C. at the ordinary pressure is passed through oil originally at 7° C. The air is allowed to sink to 58° C. How much oil will it raise to the temperature of 28° C.?

Answer. 30,800 lbs.

2. How much wrought iron will be raised from 18° C. to 30° C. with the heat given out by 3 tons of water sinking from 60° C. to 30° C. ?

Answer. 68·3 tons.

3. While 1 lb. of air at 700° C. is passing round a superheater, it sinks to 430° C. What weight of dry steam will this raise from 100° C. to 140° C., at the pressure of one atmosphere ? And what will be the new volume of the steam, supposing steam to have $\frac{5}{8}$th of air at the density of air at the same temperature and pressure ?

Answer. 3·346 lbs.; 100·4 cubic feet.

4. Twenty grammes of carbonic oxide at 680 °C., and at the ordinary pressure, is passed through a kilogramme of water at 0° C., and escapes at the temperature of 30° C.; what will be the temperature of the water ?

Answer. 3·185°.

5. How many units of heat are required to raise the temperature of 1 lb. of air from 20° C. to 600° C. ? What will be the volume of the heated air ?

Answer. 138·04; 39·6 cubic feet.

6. What will be the relative capacities for heat of the same volumes of air, carbonic oxide, steam, and hydrogen, at the same pressures, if their densities are 14·4, 14, 9, and 1 respectively ?

Answer. All equal.

7. What is the capacity for heat of a cubic foot of air, and hence (Exercise 6) of a cubic foot of any other gas at the ordinary temperature and pressure ?

Answer. ·0192 heat units.

From the answers to Exercises 6 and 7 just preceding, it is seen *that a cubic foot of any gas requires the same amount of heat to raise its temperature one degree as a cubic foot of air requires, provided we have the same pressure at all times in both cases.* This amount of heat is expressed by the decimal ·0192, when the air is at the ordinary pressure and temperature.

176. Latent Heat. The work done by heat in the molecules of a body is not always measurable as a rise of temperature, for heat may enter into a body doing work among the molecules without raising the temperature. A mass of ice may absorb much heat, its temperature never rising above 0°. In fact, heat may enter into ice, doing work among its molecules, converting it into water, the melting being the only indication of the entrance of heat.

Latent heat is the heat which enters into a body without increasing its temperature, being necessary for its condition, or in producing a change in the state of aggregation of its molecules.

When we say that the latent heat of water is 79 we mean that to melt a quantity of ice at 0° C. without raising it in temperature, requires as much heat as would raise the temperature of an equal weight of water 79 degrees.

1 lb. of water at 0° and 1 lb. of water at 79° C., when mixed, form 2 lbs. of water at 39°·5 C.; but 1 lb. of ice at 0° and 1 lb. of water at 79° C. form 2 lbs. of water at 0° C., the water having fallen in temperature 79 degrees to melt the ice.

In the same way we say that the latent heat of 1 lb. of steam is 536. If we measure the amount of heat necessary to raise 1 lb. of water from 0° to 100°, it will take about 5·36 times this measured heat to convert the whole of the water into steam under atmospheric pressure.

If we condense all the steam from 1 lb. of water boiling at the ordinary pressure of the atmosphere, by passing it into a large vessel of cold water, it will be found that the steam has given up 536 units of heat on condensation, besides a certain amount of heat in passing as water from 100° to the new temperature of the water in the cistern.

Regnault found that the total quantity of heat in 1 lb. of steam—that is, the number of units of heat which it is capable of giving out if liquefied at constant temperature, and then cooled to 0°: — was $H = 606{\cdot}5 + {\cdot}305\,\theta$, where θ° C. is the temperature of the steam. The latent heat and other properties of steam not at atmospheric pressure are more fully considered in Arts. 180—1.

In working exercises, it will be remembered that the number of units of heat received must be equal to the number of units of heat given out by the parts of a system.

Example. How many pounds of ice at 0° C. will be melted and raised in temperature to 9° C. by 90 lbs. of water at 87° C. falling in temperature to 9° C.? Let there be x lb. of ice, then the heat received by the ice is

$$\underbrace{79x}_{\text{latent heat}} + \underbrace{9x}_{\text{to raise to 9° C.}}$$

The heat given out is 90×78, hence $90 \times 78 = 79x + 9x$, from which $x = 79{\cdot}77$ lbs.

Exercises.

1. How much ice will be converted into water at 4° C. by 6 lbs. of water at 70° C.?

Answer. 4·77 lbs.

2. When 10 lbs. of water is converted into steam at atmospheric pressure, how many units of heat does it take from the source of heat and surrounding bodies?

Answer. 5,360 units.

3. 6 lbs. of superheated steam at 122° and atmospheric pressure is passed into 1,250 lbs. of water at 4° and 20 lbs. of floating ice at 0°; to what height will the water be raised in temperature?

Answer. 5°·7 C.

4. 20 lbs. of saturated steam at 144° is converted into water at 30°; how many heat units has it given out?

Answer. 1,241.

5. 20 lbs. of steam from a boiler at the pressure of 1½ atmospheres condenses in passing into 1,735 lbs. of water originally at the temperature of 16°; what is the new temperature of the water?

Answer. 23°·2 C.

6. 600 lbs. of mercury at 130° C., and 723 lbs. of olive oil at 110° C., are poured into a vessel containing 165 lbs. of water at 0° C., and 20 lbs. of floating ice; what will be the temperature of the mixture?

Answer. 70°·5 C.

177. The **specific heat** of a substance is usually not at all constant. Thus ice from − 78° C. to 0° C. has an average specific heat ·463, but from − 21° to 0° C. it is 0·502. Of aluminium at about 20° C. it is 0·2135, whereas about 300 °C. it is ·2401. Copper about 0° C. is ·090, whereas about 300° C. it is ·0985. The best wrought iron about 15° C. is ·1091, whereas about 200° C. it is ·1249; about 850° C. it is ·218, about 1,100° C. it is ·200, and it has the extraordinarily high value of ·3243 about 700° C.

All the values of the specific heats of substances quoted by me are vitiated by uncertainty as to their chemical purity and the specific heat of the water with which they were compared. I give the received values, knowing their untrustworthiness, which, however, is not very important in ordinary steam engine calculations.

The heat required to raise a pound of water one degree may be taken to be $1 + 10^{-6}\,\theta^2$ in Centigrade units and on the Centigrade scale; $1 + 3{\cdot}09 \times 10^{-7}\,(\theta - 39)^2$ in Fahrenheit units and on the Fahrenheit scale. These empirical formulæ may be taken as according with Regnault's measurements. It is difficult to say exactly what these units of heat mean, because Regnault did not pay much attention to the variation in the specific heat of water below 100° C.

The latest determination of the average heat energy required to raise one pound of water one degree (called **Joule's Equivalent**) from 0° C. to 100° C., is by Professor O. Reynolds, and is 1,399 foot-pounds; or for 1 gramme it is 0·995 calorie. One calorie, the heat required to raise 1 gramme from 10° C. to 11° C., is 4·2 Joules or $4{\cdot}2 \times 10^7$ Ergs. The heat from 20° C. to 21° C. is $\frac{1}{5}$th of one per cent. less. Regnault's value of h in the table, Art. 180, shows the heat given to one pound of water to raise it to θ° C. under the constant pressure corresponding to that temperature. The best thing in my power is to notice that Regnault's heat given to water from 0° to 100° C. is 100·5 units. According

to Reynolds, this is 139,900 foot-pounds, and so I shall take one of what I call Regnault's units to be 1,393 (or 774 on the Fahr. scale) foot-pounds. There is no present possibility of comparing the Reynolds's measurement with those so carefully made between 10° C. and 25° C. by Rowland and Griffiths.

178. I must warn students that the tables of numbers given in engineering books as the heat properties of water and steam and other substances are generally wrong ; often very greatly wrong. The tables, pages 320—3, have given me and one of my assistants (Mr. D. Baxandall) an enormous amount of trouble, because we ventured once or twice to assume numbers to be correct which we found published in treatises and scientific papers by the most noted of English and American and other writers. It is particularly annoying when a result of this dependence on others is the necessity of altering some hundreds of scattered calculations. I am sorry to say that one writer on whom I usually place great reliance has increased Rankine's u of the table, Art. 180, in the ratio 778/772. I have just shown that the ratio ought to be 774/772, and this is what I have used.

It may be remarked that almost all calorimetric measurements made until quite recently are open to suspicion, if for nothing else than the **errors of the thermometers.** Now that the German Reichsanstallt is improving the glass manufacture, it may be hoped that in time thermometers of mercury in glass may be depended on to give always the same reading at the same temperature. For all temperatures and for the most exact readings, practical men will find the "Electrical Resistance of Platinum" thermometer better than any other. A handy "Thermal Junction" thermometer reading in degrees of the hydrogen thermometer is greatly wanted. There is a German glass mercury thermometer of the ordinary kind which reads to 1022° F., or 550° C., with considerable accuracy, using a zero correction.

In time our measurement of temperature will probably be, not by marks on an instrument showing expansion due to heat, but by the pressure of some vapour or vapours. The melting points of various substances in degrees on the air thermometer, furnish the best standards for practical men at the present time.

Rowland has shown that when 0° C. and 100° C. are the same on the air and mercury (in glass) thermometers, the readings t° C. (air) and T° C. (mercury) are connected by

$$t = T - a\,t\,(100 - t)(b - t)$$

where a and b are constants. Thus, with some kinds of glass,

$$a = 44 \times 10^{-8},\ b = 260.$$

It is to be remembered that a mercury thermometer has its stem between the 0° C. and 100° C. marks divided into parts of equal volume.

A mercury thermometer kept for five hours at a high temperature will often have its freezing point of water depressed one to two degrees, but it will recover. After forty years of use a mercury thermometer may read 1° C., instead of 0° C. In fairly exact work the stem is supposed immersed to the level of the top of the mercury ; in the most exact work the whole thermometer is supposed to be at the same temperature.

But, indeed, remarks like this are misleading. The errors of English thermometers are very great, and must remain great until we have a physical laboratory which will do for our heat measurements what Whitworth did for our measurements of length. The glasses used differ greatly, and even the best thermometers at Paris and Berlin show remarkable secular changes of behaviour.

Rises of 7°, or more, occur after exposure to high temperatures, so that all readings have to be checked by taking an ice reading afterwards. That pressure coefficients must be used is obvious, if one remembers that even the effect of the pressure of the mercury column itself is very evident when we change a thermometer from its vertical to a horizontal position; and barometric pressure alters sometimes in these islands by 3½ inches. It is true that at the Bureau International they are able, with a *verre dur* glass mercury thermometer, and possibly at Berlin, to get readings which approach those of the hydrogen thermometer with errors ± ·002° C.; but it is absurd for any experimenters using English glass mercury thermometers to pretend to a greater accuracy than a tenth of a degree.

CHAPTER XIX.

PROPERTIES OF STEAM.

179. Squared paper is now in very common use to show how one thing depends upon another. I assume that students have already used it to express the results of experiments in a mechanics or heat laboratory.

The following **experiment** must be made by every student who hopes to understand the steam engine.

Get a little boiler with some water in it and a gas flame to heat it with. Most of the air must have been driven out by escaping steam before the following observations are made. There must be a safety valve. A thermometer (its bulb protected so that pressure shall not alter its readings) measures the temperature of the steam. It is worth while to have two thermometers, one reading Centigrade, the other Fahrenheit. A Bourdon's pressure gauge, whose construction is described in Art. 110, may be used for the roughly correct measurement of pressure. I use also a mercury gauge which may be graduated so as to measure the absolute pressure; the outer end of the tube being closed and containing air kept at constant temperature by a bath. It is an ordinary part of the work in a mechanical laboratory to test the readings of pressure gauges by the use of a column of mercury and cistern gauge, and in accurate work a barometer must be observed for the atmospheric pressure at the time. I shall quote only the absolute pressure. The first thing which the student ought to note is that when the temperature is 120° C. the pressure is 28·8 lbs. per square inch, and if the temperature alters and comes back again to 120° C. the pressure returns to 28·8. He will make out a table showing what the pressures are for many temperatures, so that by means of it he knows the pressure of steam for any temperature if the steam is in the presence of water or what we call saturated steam. This is a very important fact, and

shows that a thermometer may be used on a boiler instead of a pressure gauge to tell what the pressure is, but of course a table of the corresponding numbers is needed. The student ought to verify columns 1 and 2 of Table I. or of Table II. These tables are due to the very careful measurements of Regnault.

Now, having his table of numbers, let a student get a sheet of squared paper. Such sheets in which the length is 17 inches and the breadth is 10 inches, divided into tenths of an inch so that there are horizontal and vertical lines forming little squares each one-tenth of an inch in side, may be bought for sevenpence a quire. Mark off a scale of temperatures horizontally and another of pressures vertically. Any scales will do, depending upon the ranges of values in our experimental numbers. Now plot a point for the temperature 120° C. and the pressure 28·8 lbs. per square inch; and each point in the curve marked P and θ, Fig. 216, represents one pair of observed numbers. Having plotted all such points use a thin batten of wood to help in drawing the curve which passes through all the points. If there are errors of observation, their probable values will be seen when we have drawn the curve which lies *most evenly* among the points. The curve not only represents the observed numbers, but corresponding values of temperatures and pressures lying between the observed ones.

There are some men who keep curves of this kind hanging up on the walls of their rooms for ready reference, not merely to show how pressure and temperature of steam depend upon one another, but many other corresponding quantities. Every morning you will find in the newspaper, curves showing the heights of the barometer and of atmospheric temperature, &c., at various times. A merchant plots the price of silk or cotton yarn or copper, showing by curves how it varies from day to day.

Squared paper is peculiarly valuable to the engineer. A curve shows at a glance the general nature of the relationship of one thing to another, and if it is drawn to a large enough scale, there is often as much accuracy as with a table of numbers. Besides, a table does not give one the intermediate values, and it is troublesome sometimes to interpolate. The curve shows to the eye the rate of increase also, of one quantity relatively to the other.

180. In a laboratory for the use of students of the steam engine there is supposed to be simple apparatus for measuring, not merely pressures above that of the atmosphere, but less pressures, and also some of the other columns of numbers shown in Tables I. and II., Art. 180, and it is only by such measurement that a student gets a good

working knowledge of the **properties of steam.** Of course there are men of genius, one in a century, who may know of things through mere reading; but the engineering world is getting too much filled up by men whose knowledge, or rather ignorance, of practical physics is due merely to reading. One cannot in a few words describe why actual observation should be so necessary for true knowledge; pro-

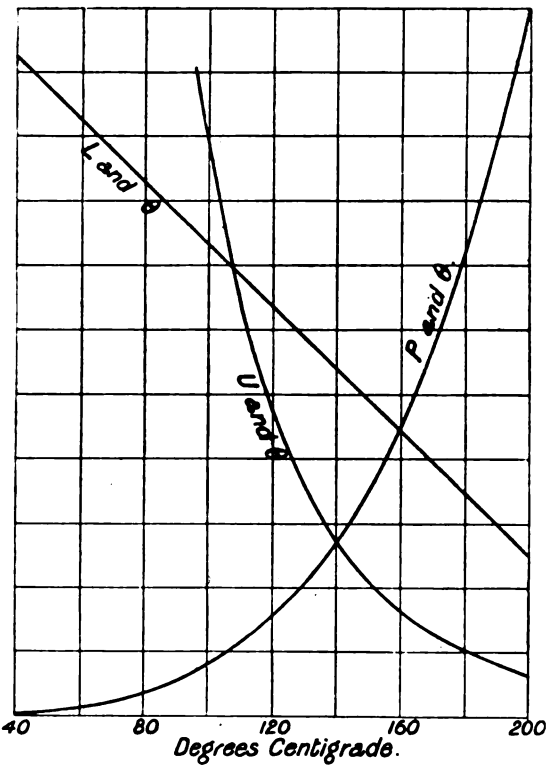

FIG. 216.

bably a lying witness after a simple cross-examination by a skilful barrister would be able to describe it easily enough.

There is no better practice for the student than to plot the various columns of numbers given in the following table, so that one may find the value of p, u, H, l, ϕ for water or ϕ for steam, rapidly, for any value of the temperature or for any value of the pressure. Some of these are shown in Figs. 216 and 217. Notice how P increases more and more rapidiy as θ increases, and how L regularly diminishes as θ increases. Table II. is obtained from Table I. by

interpolation. Very often it is a definite pressure that is given and we wish to find the other properties, and then such a table will be found valuable.

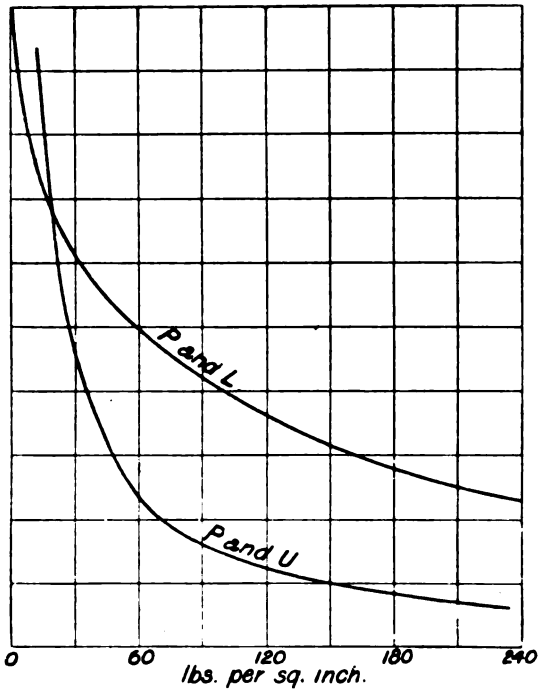

FIG. 217.

Water-Steam.

Although the properties of water-steam used in the steam engine are tabulated, it sometimes saves trouble to use Regnault's formulæ in many calculations. These are :—

Total heat of a pound of steam H at $\theta°$ C. or $\theta°$ F., absolute temperature being t

$$(1) \quad \left.\begin{aligned} H &= 606{\cdot}5 + {\cdot}305\,\theta \\ H &= 522{\cdot}5 + {\cdot}305\,t \end{aligned}\right\} \text{in Centigrade units.}$$

$$\left.\begin{aligned} H &= 1082 + {\cdot}305\,\theta \\ H &= 941{\cdot}4 + {\cdot}305\,t \end{aligned}\right\} \text{in Fahrenheit units.}$$

The heat for water from 0° C. to $\theta°$ C. may be taken to be

$$h = t + {\cdot}00002\,t^2 + {\cdot}0000003\,t^3 \quad . \quad . \quad . \quad . \quad (2)$$

The latent heat l is

$$l = H - h \quad . \quad . \quad . \quad . \quad (3)$$

In almost all calculations on the steam engine we may take h as equal to θ on the Centigrade scale or to $\theta - 32$ on the Fahrenheit scale, so that

$$(4) \quad \left.\begin{aligned} l &= 606{\cdot}5 - {\cdot}695\,\theta \\ l &= 796{\cdot}2 - {\cdot}695\,t \end{aligned}\right\} \text{Centigrade.} \qquad \left.\begin{aligned} l &= 1114 - {\cdot}695\,\theta \\ l &= 1433 - {\cdot}695\,t \end{aligned}\right\} \text{Fahrenheit.}$$

It is convenient in this place to give other formulæ which we are likely to employ in our heat calculations.

Rankine's formula, probably the most accurate, is

$$\log_{\cdot 10} p = A - \frac{B}{t} - \frac{C}{t^2} \quad . \quad . \quad . \quad . \quad (5)$$

Where, if p is in pounds per square inch, and t is absolute temperature Fahrenheit, we have

	A	Log. 10 B.	Log. 10 C.
Water and steam	6·1007	3·43642	5·59873
Alcohol	5·8123	3·31233	5·75323
Ether	5·4148	3·31492	5·21706
Bisulphide of carbon . . .	5·1854	3·30728	5·21839

With Centigrade temperature subtract ·25527 from *log. B*, and ·51054 from *log. C.*

A fairly accurate formula, of easy application, is that of Professor Unwin: p is in pounds per square inch,

$$\log_{\cdot 10} p = 5{\cdot}8031 - \frac{15900}{t^{1\cdot 25}} \quad . \quad . \quad . \quad . \quad . \quad . \quad (6)$$

if t is absolute temperature Fahrenheit;

$$\text{or } \log_{\cdot 10} p = 5{\cdot}8031 - \frac{7625}{t^{1\cdot 25}} \quad . \quad . \quad . \quad . \quad . \quad (6)$$

if t is absolute temperature Centigrade.

A formula sometimes used is this, p being in atmospheres,

$$\log_{\cdot 10} p = 5\,\frac{\theta^\circ \text{F.} - 212}{\theta^\circ \text{F.} + 365} = 5\,\frac{\theta^\circ \text{C} - 100}{\theta^\circ \text{C} + 221{\cdot}7} \quad . \quad . \quad . \quad (7)$$

There are formulæ often used which are of the type

$$p = a\,(\theta + b)^c \quad . \quad . \quad . \quad . \quad . \quad . \quad . \quad . \quad (8)$$

where a, b and c may be found from the table by a class of students. In many cases c is taken as 5. But any value of c between 5·7 and 4·7 may be taken, and values of b and a are easily found which will give a useful formula. It is,

I. PROPERTIES OF WATER-STEAM.

0 C.	p lbs. per sq. inch.	p per sq foot.	$\frac{dp}{dt}$ lbs. per sq. foot per degree Centigrade.	u volume of 1 lb. in cubic feet.	v volume of 1 lb. of gaseous H_2O in cubic feet.	Percentage increase in volume of water from volume at 4° C.	Centigrade Heat Units. H	h	$H-h$ or l	External work during evaporation.	Intrinsic energy 1 lb. of steam. $H-pu/1393$.	Entropy (in Ranks) per pound. Water. Φ_w	Steam. Φ_s
0	0·085	12·27	·9	3398	3436	0	606·5	0·00	606·5	29·92	576·6	0	2·214
5	0·122	17·62	1·3	2412	2435	—	608·0	5·00	603·0	30·51	577·5	·018	2·181
10	0·173	24·92	1·6	1736	1752	·03	609·5	10·00	599·5	31·06	578·4	·036	2·149
15	0·241	34·77	2·27	1268	1278	·08	611·1	15·00	596·0	31·65	579·4	·054	2·119
20	0·333	47·87	3·00	936·9	944·8	·17	612·6	20·01	592·6	32·19	580·4	·071	2·089
25	0·452	65·06	3·98	700·8	706·8	·29	614·1	25·02	589·1	32·73	581·4	·088	2·061
30	0·607	87·40	5·07	530·7	535·0	·42	615·6	30·03	585·6	33·30	582·3	·104	2·033
35	0·806	116·1	6·50	405·9	409·3	—	617·2	35·04	582·1	33·84	583·4	·121	2·007
40	1·06	152·6	8·18	313·6	316·4	·77	618·7	40·05	587·6	34·34	584·4	·137	1·982
45	1·38	198·6	10·2	244·6	247·0	—	620·2	45·07	575·1	34·87	585·3	·153	1·957
50	1·78	256·0	12·7	192·5	194·7	1·20	621·7	50·09	571·7	35·37	586·3	·169	1·935
55	2·27	327·0	15·7	152·8	154·7	—	623·3	55·11	568·2	35·85	587·4	·184	1·912
60	2·88	414·3	19·2	122·3	124·0	1·69	624·8	60·13	564·7	36·37	588·4	·199	1·890
65	3·62	520·6	23·3	98·7	100 1	—	626·3	65·17	561·1	36·88	589·4	·214	1·870
70	4·51	649·1	28·0	80·23	81·51	2·26	627·8	70·20	557·6	37·39	590·4	·229	1·850
75	5·58	803·3	33·6	65·64	66·82	—	629·4	75·24	554·1	37·85	591·5	·244	1·832
80	6·86	987·6	39·9	54·06	55·12	2·89	630·9	80·28	550·6	38·32	592·6	·258	1·814
85	8·38	1206	47·3	44·81	45·78	—	632·4	85·33	547·1	38·79	593·6	·272	1·797
90	10·16	1463	55·5	37·36	38·25	3·57	633·9	90·38	543·6	39·23	594·7	·286	1·780

95	12·26	1765	64·8	31·34	32·16	—	635·5	95·44	540·0	39·70	595·8	·300	1·764
100	14·70	2116·4	75·4	26·43	27·17	4·3	637·0	100·5	536·5	40·15	596·8	·314	1·748
105	17·53	2524	87·6	22·40	23·10	—	638·5	105·6	533·0	40·58	597·9	·327	1·733
110	20·80	2994	100·4	19·08	19·72	5·1	640·9	110·6	529·4	41·02	599·0	·341	1·719
115	24·54	3534	115·0	16·32	16·92	—	641·6	115·7	525·8	41·40	600·2	·354	1·705
120	28·83	4152	131·5	14·04	14·60	6·0	643·1	120·8	522·3	41·83	601·3	·367	1·692
125	33·71	4854	149·4	12·12	12·64	—	644·6	125·9	518·7	42·23	602·4	·380	1·680
130	39·25	5652	169·0	10·51	10·99	7·0	646·1	131·0	515·1	42·64	603·5	·393	1·667
135	45·49	6551	190·0	9·147	9·603	—	647·7	136·1	511·6	43·00	604·7	·406	1·655
140	52·52	7563	214·0	7·995	8·420	8·1	649·2	141·2	508·0	43·40	605·8	·419	1·644
145	60·40	8698	240·0	7·009	7·409	—	650·7	146·3	504·4	43·76	606·9	·430	1·634
150	69·21	9966	268	6·168	6·548	9·2	652·2	151·5	500·8	44·14	608·1	·442	1·623
155	79·03	11380	297	5·446	5·798	—	653·8	156·5	497·2	44·48	609·3	·454	1·613
160	89·86	12940	329	4·827	5·158	10·3	655·3	161·7	493·5	44·83	610·5	·466	1·604
165	101·9	14680	363	4·290	4·598	—	656·8	166·9	489·9	45·20	611·6	·478	1·595
170	115·1	16580	400	3·823	4·120	11·6	658·3	172·0	486·3	45·50	612·8	·490	1·585
175	129·8	18690	439	3·419	3·695	—	659·9	177·2	482·7	45·86	614·0	·501	1·576
180	145·8	20990	482	3·065	3·327	12·9	661·4	182·4	479·0	46·17	615·2	·513	1·568
185	163·3	23520	528	2·756	3·001	—	662·9	187·6	475·3	46·52	616·4	·524	1·560
190	182·4	26270	575	2·482	2·717	14·3	664·4	192·8	471·7	46·80	617·6	·535	1·551
195	203·3	29270	625	2·242	2·464	—	666·0	198·0	468·0	47·10	618·9	·546	1·543
200	225·9	32520	677	2·031	2·242	15·7	667·5	203·2	464·3	47·42	620·1	·558	1·536
205	250·3	36050	—	1·843	2·046	—	669·0	208·4	460·6	47·68	621·3	·569	1·529
210	276·9	39870	—	1·676	1·866	17·2	670·6	213·7	456·9	47·97	622·6	·579	1·522
215	305·5	43990	—	1·529	1·670	—	672·1	218·9	453·2	48·27	623·8	·589	1·515

II. PROPERTIES OF WATER-STEAM.

Pressure in pounds per square inch p	Temperature. θ° F.	Pounds per square foot per degree Fahrenheit. dp/dt.	u	Fahrenheit Heat Units.			Entropy (in Ranks) per pound.		Pounds of steam per hour per h.-p. (Rankine Cycle).	
				H	h	l	Water. ϕ_w	Steam. ϕ_s	Condensing. w	Non-condensing. w'
1	102	4·28	334·2	1113·0	70·1	1043	·134	1·987		
2	126·3	7·8	173·2	1120·4	94·4	1026	·175	1·924		
3	141·6	10·8	118·0	1127·0	109·9	1011	·201	1·887		
4	153·1	14·1	89·80	1128·6	121·4	1007	·220	1·861		
5	162·3	17·0	72·50	1131·4	130·7	1001	·235	1·841		
6	170·1	19·8	61·10	1133·8	138·6	995·2	·247	1·825		
7	176·9	22·1	53·00	1135·9	145·4	990·5	·257	1·814		
8	182·9	25·3	46·60	1137·7	151·5	986·2	·268	1·800		
9	188·3	27·9	41·82	1139·4	156·9	982·4	·277	1·790		
10	193·2	30·5	37·80	1140·9	161·9	979·0	·285	1·781		
15	213·0	42·5	25·87	1146·9	181·9	965·0	·315	1·747		
20	227·9	54·2	19·72	1151·4	197·0	954·4	·338	1·722		
25	240·0	64·8	15·99	1155·1	209·3	945·8	·356	1·704		
30	250·2	75·5	13·48	1158·3	219·7	938·5	·370	1·689		
35	259·2	85·5	11·66	1161·0	228·8	932·1	·384	1·677		
40	267·1	95·0	10·29	1163·4	236·9	926·5	·395	1·666		
45	274·3	105·0	9·21	1165·6	244·3	921·3	·405	1·657		
50	280·8	114·4	8·34	1167·6	251·0	916·6	·415	1·649	10·33	28·4
55	286·9	124	7·63	1169·4	257·1	912·3	·423	1·641	10·09	26·8
60	292·5	133	7·03	1171·2	262·9	908·2	·431	1·634	9·87	25·2
65	297·8	142	6·52	1172·8	268·3	904·5	·438	1·628	9·68	23·8
70	302·7	150	6·09	1174·3	273·4	900·9	·444	1·623	9·52	22·7
75	307·4	158	5·70	1175·7	278·2	897·5	·450	1·617	9·36	21·8

80	311·8	167	5·37	1177·0	282·7	894·3	·455	1·612	9·23	20·95
85	316·0	175	5·07	1178·3	287·0	891·3	·461	1·608	9·10	20·25
90	320·0	183	4·81	1179·5	291·2	888·4	·466	1·604	8·99	19·62
95	323·9	191	4·57	1180·7	295·1	885·6	·471	1·600	8·88	19·05
100	327·6	199	4·356	1181·8	298·9	882·9	·476	1·596	8·77	18·54
105	331·1	206	4·161	1182·9	302·6	880·3	·480	1·593	8·68	18·06
110	334·5	214	3·984	1184·0	306·1	877·9	·485	1·590	8·60	17·65
115	337·8	222	3·821	1185·0	309·5	875·5	·490	1·586	8·51	17·25
120	341·0	229	3·671	1185·9	312·8	873·2	·494	1·583	8·44	16·90
125	344·1	237	3·534	1186·9	316·0	870·9	·498	1·580	8·37	16·58
130	347·1	244	3·406	1187·8	319·0	868·7	·501	1·577	8·30	16·29
135	349·9	252	3·287	1188·7	322·1	866·6	·505	1·574	8·24	16·02
140	352·8	259	3·177	1189·5	325·0	864·6	·508	1·571	8·18	15·75
145	355·5	266	3·074	1190·4	327·8	862·6	·512	1·569	8·12	15·51
150	358·2	274	2·978	1191·2	330·6	860·6	·515	1·566	8·06	15·28
155	360·7	281	2·888	1192·0	333·2	858·7	·518	1·563	8·01	15·07
160	363·3	288	2·803	1192·7	335·9	856·9	·521	1·561	7·96	14·88
165	365·7	295	2·724	1193·5	338·4	855·1	·524	1·559	7·91	14·69
170	368·2	302	2·649	1194·2	340·9	853·3	·527	1·557	7·86	14·50
175	370·5	309	2·578	1194·9	343·4	851·6	·530	1·555	7·81	14·33
180	372·8	316	2·510	1195·6	345·8	849·9	·533	1·552	7·77	14·17
185	375·1	323	2·447	1196·3	348·1	848·2	·536	1·550	7·73	14·02
190	377·3	329	2·386	1197·0	350·4	846·6	·539	1·548	7·69	13·88
195	379·4	336	2·328	1197·7	352·7	845·0	·542	1·546	7·66	13·74
200	381·6	343	2·273	1198·3	354·9	843·4	·544	1·545	7·63	13·61
205	383·7	349	2·221	1199·0	357·1	841·9	·547	1·543	7·59	13·48
210	385·7	356	2·171	1199·6	359·2	840·4	·549	1·541	7·56	13·35
215	387·7	362	2·124	1200·2	361·3	838·9	·551	1·540	7·53	13·22
220	390·0	369	2·07	1200·8	—	—	·554	1·538	7·49	13·10
230	394	382	1·99	1201·9	—	—	·559	1·535	7·43	12·90
240	397·5	—	1·91	1203·0	—	—	·563	1·532	7·38	12·70
250	401	—	1·84	1204·0	—	—	·567	1·529	7·32	12·51
260	404·5	—	1·77	1205·0	—	—	·571	1·526	7·27	12·35
270	408	—	1·71	1206·0	—	—	·575	1·523	7·21	12·20
280	411	—	1·65	1207·0	—	—	·579	1·520	7·16	12·05
290	414·4	—	1·60	1207·9	—	—	·583	1·518	7·10	11·91
300	417·5	—	1·55	1208·9	—	—	·587	1·515	7·04	11·77

however, easy to show that no such formula can be satisfactory ; for, if it were true, then $p\frac{d\theta}{dp}$ ought to be a linear function of θ. Now, my students have calculated $\frac{dp}{d\theta}$ very carefully from Regnault's values, using the method of Ex. 7, Art. 128, and they have plotted the values of $p\frac{d\theta}{dp}$ and θ on squared paper, and they do not get a straight line: the departure from a linear law is very marked. I therefore use (8) only when I wish to interpolate, but when I wish to actually calculate p from θ, or θ from p, I use the Rankine formula, or in less accurate work I use (6) or (7).

In Art. 366 we see how to calculate u the volume in cubic feet of a pound of steam at the pressure p lbs. per square inch. The values so calculated are given in our table. We find that these numbers satisfy the rule

$$pu^{1\cdot0646}=479 \quad . \quad . \quad . \quad . \quad (9)$$

181. Imagine A (Fig. 218) to be a cylinder of one square foot in cross section with a piston, containing **one pound of water**

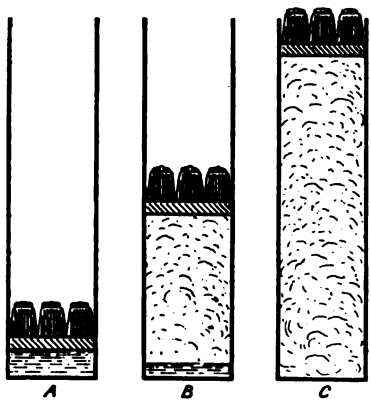

FIG. 218.

stuff, and let us suppose it to be surrounded by a bath which keeps it at any known temperature.

The total load on the piston, including its own weight, being 2737·6 lbs., I know that the normal atmospheric pressure being 2116·4 lbs. per square foot there is a total downward pressure on the water of 4,854 lbs. per square foot, or 33·71 lbs. per square inch. Now, if the bath and water were originally at 0° C., the water stuff being liquid, if the water is raised gradually in temperature to 125° C., it

gets a little larger in volume, but this small change of volume, and indeed, the whole volume of the water I shall neglect. The heat given to the water is called h in the table, and is 125·6 units, or 125·6 × 1,393 foot-pounds. The bath is supposed to keep the temperature of the stuff exactly at 125° C. in all that follows, and therefore our changes must proceed very slowly. The slightest lessening of the load will cause the piston to rise and part of the water becomes steam, and, although the temperature remains constant, the bath must give heat, called **latent heat** to the stuff. When as shown in C. the stuff is all steam, it has received from 0° C. the total heat 644·5 units, called H in the table. That is, it has received the additional heat called latent heat, 519 units, called l in the table, being $H - h$. The smallest increase of pressure will cause the piston to fall, and as the bath keeps the temperature constant at 125° C. the steam becomes water again, giving up its latent heat. In the state B, suppose that there is 0·4 lb. of water and 0·6 lb. of steam at 125° C., the water has received the total heat $h \times \cdot 4$, and the steam $H \times \cdot 6$, so that the total heat of the pound of stuff is easily calculated, and if we start in the condition A, all water at 0° C., and get to the condition B at 125° C., it is this total amount $\cdot 4\,h + \cdot 6\,H$, which has been given to the stuff from the bath.

It is well to remember that the steam has not this total amount of energy in it, for although it has received this or $(\cdot 4\,h + \cdot 6\,H)$ 1,393 foot-pounds, it has done work on the piston, whose amount is 4,854 × the change of volume. Now, I shall neglect the volume of the water, and the volume of one pound of this kind of steam is 12·12 cubic feet, so that the increase of volume has been 0·6 × 12·12. Hence to get the actual energy in our pound of stuff we must subtract 4,854 × 0·6 × 12·12, or 35,300 foot-pounds.

182. I have sometimes had tables printed giving the values of H and h and l in foot-pounds; every H and h and l of Table I., Art. 180, being multiplied by 1393, Joule's Equivalent; but in practice I find that everybody prefers to use heat units. The value of u was calculated by Rankine from the thermodynamic formula—

Art. 366. The values of $\frac{dp}{dt}$ have been worked out by my students as in Ex. 7, Art. 128, and tabulated after correction by a curve. The external work done by the steam in its formation is pu foot-pounds, if p is in pounds per square foot; I have converted it into heat units b dividing by Joule's Equivalent. I have subtracted this from H to find the intrinsic energy E, or energy actually possessed by a

pound of steam in excess of the energy possessed by a pound of water at 0° C.

183. In Chap. XXIII. I endeavour to describe the use of ϕ_w and ϕ_s. ϕ_w is the **entropy** of a pound of water calculated as in Art. 208; ϕ_s is the entropy of a pound of steam. It will be seen that

$$\phi_s = \phi_w + \frac{\text{latent heat}}{\text{absolute temperature}}$$

The student must understand that ϕ_w and ϕ_s are properties possessed by a pound of water and by a pound of steam, respectively.

Example. What is the entropy of 1 lb. of water-steam containing 0·4 lb. of water, and 0·6 lb. of steam at 125° C.? *Answer* (see Table I.). One way of working is to say 0·4 × ·380 + 0·6 × 1·680 = 1·160

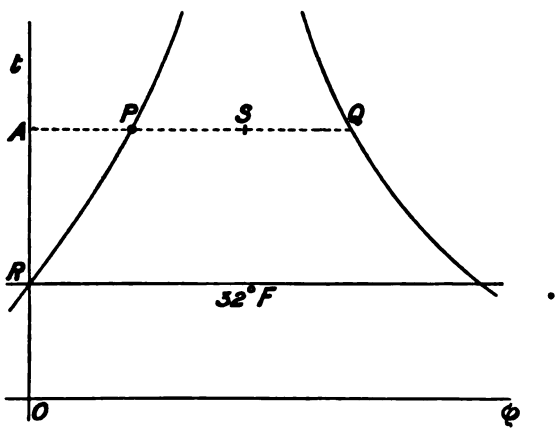

FIG. 219.

ranks. Another equally good is to say:—There is the entropy of 1 lb. of water at 125° C., or 0·380, and addition of entropy due to the formation of 0·6 lb. of steam, or 0·6 × the latent heat 519 divided by the absolute temperature 399.

Curves P and Q, showing the values of ϕ_w and ϕ_s for every temperature in the table, are usually drawn by my students (see Fig. 219) upon somewhat larger and more expensive squared paper than what they use for ordinary calculation.

Intermediate curves are also drawn, dividing every horizontal distance between P and Q into ten equal parts. Indeed, some of my students who use the θ ϕ diagram for many practical purposes, divide the spaces into many more parts than ten, so that for example

in the above case they have only to look for the line APQ which corresponds to 125° C.; they take SQ as 0·4 of QP, so that the point S represents the state of the pound of water stuff given above.

A carefully prepared $\theta\phi$ diagram will also have drawn upon it curves of constant volume for a pound of mixed steam and water. It will also have curves of constant volume and pressure of superheated steam as described in Art. 205. I find that a blackboard with all these lines upon it is very useful. The lines of the squared paper are especially useful as the area of each square represents energy (see Art. 203).

184. The numbers in the last two columns of Table II. are described in Art. 214, 1st case. For example take 100 lbs. pressure. A **perfect** non-condensing engine using the Rankine cycle would use 18·54 lbs. of this steam per hour to produce one horse-power, and this number serves as a standard. Thus, suppose some non-condensing engine to give one horse-power for 25 lbs. of such steam, we should say that its efficiency as compared with the most perfect non-condensing engine using such steam is 18·54 ÷ 25, or 0·7416, or 74·16 per cent.

It is the fashion just now to use this kind of standard. A better one is illustrated in the following exercise:—

EXERCISE. Feed water is supplied to the boiler at 60° F.; 30 lbs. of steam at 100 lbs. pressure are used per hour per brake horse-power. What is the efficiency?

The total heat of 1 lb. of such steam is 1,182 in Fah. units. Subtracting 60 − 32, or 28, we get 1,154 units as the heat given to form each pound of steam, or 1,154 × 30, or 34,620 units per hour. Now one horse-power is 33,000 × 60 ÷ 774, or 2,558 heat units per hour, so that the efficiency is 2,558 ÷ 34,620, or ·0739, or 7·39 per cent., a very different sort of answer from the last.

The student will find it well at this point to work the exercises given in Arts. 248 and 249.

In my steam-water calculations, I almost always neglect the **volume of water** present. In other calculations we need to know the volume of a pound of water (see Table I.). At ordinary temperatures, about 60° F., we take ·016 cubic feet. At the following temperatures we multiply ·016 by the following numbers:—

212° F. or 100° C.	multiply by	1·04
284° F. or 140° C.	,,	1·08
356° F. or 180° C.	,,	1·13
392° F. or 200 C.	,,	1·16

Rankine gives the following formula for the volume in cubic feet of one pound of liquid water at any absolute Fahrenheit temperature t:—

$$V_w = 0{\cdot}0080 \left(\frac{t}{500} + \frac{500}{t}\right)$$

EXERCISE. A cylinder is 12 inches diameter. The area of bounding surface of the clearance space, including the area of the piston, is 350 square inches. What is the total area exposed when cut off takes place: if the crank is 1 foot and cut off takes place at one-third of the stroke? If the initial steam is 120 lbs. pressure, what is the weight of indicated steam? If 35 per cent. of the steam admitted is condensed, what is the weight of condensed steam?

Take twice this quantity of water, and imagine it spread over all the surface exposed at cut off, what would be the thickness of the water? What thickness of cast iron would have the same capacity for heat as this thickness of water? If the exhaust pressure was 4 lbs. per square inch, what thickness of iron would be changed from the exhaust to the admission temperature by the same amount of heat as the difference in total heat of the condensed steam?

EXERCISE. In one stroke 0·7 cubic feet of steam at 150° C. is supplied to a cylinder during $\frac{1}{15}$th of a second. Half of it is condensed. The exposed area of metal is 450 square inches, and its temperature is nearly constant 110° C. How much heat enters the metal per second, per square $c\ m$ of surface, per degree difference of temperature?

This steam is 6·17 cubic feet to the pound, so that ·057 lb. is condensed. In condensing each pound gives out the heat

$$606{\cdot}5 + {\cdot}305\ (150) - 110, \text{ or } 542 \text{ units},$$

so that the heat given to the metal is 30·9 units. The area exposed is $450 \times 6{\cdot}45$ square $c\ m$, and the answer is evidently $\frac{30{\cdot}9 \times 15}{450 \times 6{\cdot}45 \times 40}$ or ·004 units of heat per second per square centimètre per degree difference of temperature. This is twenty times the greatest emissivity observed between a small polished copper ball and the atmosphere, and such a ball owes half its emissivity to having a great curvature of surface, so that the above number is about forty times what we might have expected the emissivity to be between air and polished metal.

185. If a point P is given, to draw through it a curve PP^1N^1 representing the pressure and volume of a quantity of saturated

steam where PB represents pressure and PA represents volume, to any scale.

Find the pressure represented by PB: let it be, say 89·86 lbs. per square inch; PA is given in inches as the linear representation of the volume. Let F^1F represent the pressure 69·21 to find OF. We note that

$$\frac{OF}{OB} = \frac{\text{vol. of 1 lb. of steam at } 69{\cdot}21}{\text{vol. of 1 lb. of steam at } 89{\cdot}86} = \frac{6{\cdot}153}{4{\cdot}816}$$ by the table, so that as OB is known, OF can be found.

In this way, using the tables, we can find OF for any pressure and plot the point F^1 and so get the saturation curve PF^1N^1. I prefer this method of drawing the curve. It may be more tedious than some other, but it keeps one in touch with necessary ideas concerning the properties of steam.

I do not know to what extent the following exercises are worth doing by students.

Expansion curves in Steam and Gas Engine Cylinders.

It often happens that we are asked to draw a p, v curve through the point P such that pv^k is constant, where, for any point F^1 on the curve, the distance OF represents v to some scale, and the distance FF^1 represents p to some scale. It is not necessary to pay any attention to these scales.

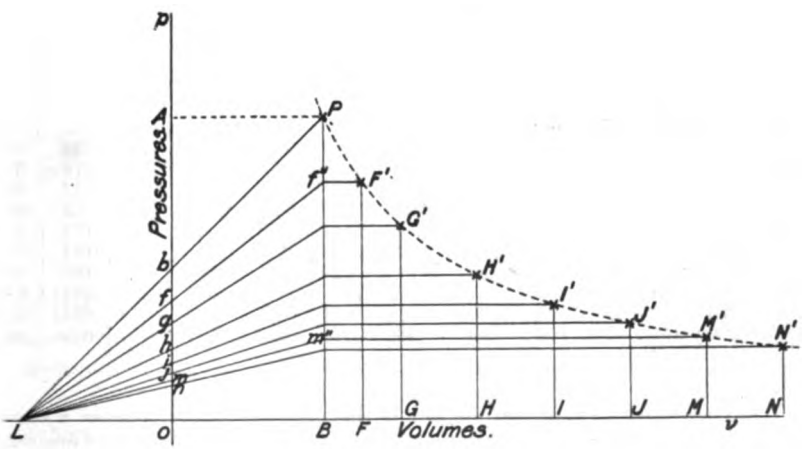

FIG. 220.

Given P. Draw PB at right angles to ov.

Take points F, G, H, I, J, M, N, &c., at distances from O, 1¼, 1½, 2, 2½, 3, 3½, 4, or &c. times OB.

Thus, suppose OM is 3½ times OB,

To find M^1 the corresponding point in the curve,

Set off $ob = 1$ along OP, to any convenient scale, say $ob = 1$ inch.

Join Pb and produce to L.

Choose the column of numbers on the following table under any particular value of k that may be given. Thus, if k is 0·9, then as $\frac{OM}{OB}$ is $3\frac{1}{2}$, we find $\frac{om}{ob} = 0{\cdot}324$, and hence we set up om as 0·324 inch if ob is 1 inch.

Join Lm and produce to m''. Project horizontally and vertically from m'' and M to find the point M' which is on the curve.

A number of points like M ought to be set off at starting, so that the points like m may be set off rapidly.

In Fig. 220 we wanted o draw the curve $pv^{0\cdot9}$ constant through the given point P.

We made $ob = 1$, $of = {\cdot}818$, $og = {\cdot}694$, $oh = {\cdot}536$, $oi = {\cdot}438$, and so on, the numbers in the column headed ·9 in our table, and so found all the points quickly on any scale whatever.

We give, among other values of k in our table, $k = 1{\cdot}0646$, that steam saturation curves may be easily drawn : $k = 1{\cdot}130$, because this gives a fair approximation to many adiabatic curves (see Art. 211), when little water is present at the beginning of the expansion. We give $k = 1{\cdot}3$ and $k = 1{\cdot}414$, because they are the adiabatics for superheated steam (?) and for air ; also we give $k = 1{\cdot}37$, because it is the adiabatic for the usual mixture found in gas and oil engine cylinders.

$k = 1$ gives the rectangular hyperbola ; the curve of expansion of perfect gases at constant temperature, easily drawn in other ways.

It is a good exercise for the student to draw all these curves to a large scale from the same point P, so that he may have a working notion of the differences between them.

	·7	·8	·9	1·0	1·0646	1·1	1·130	1·2	1·3	1·37	1·4	1·414
$1\frac{1}{4}$	·855	·837	·818	·800	·789	·782	·777	·765	·748	·737	·732	·729
$1\frac{1}{2}$	·753	·723	·694	·667	·649	·640	·632	·615	·590	·574	·567	·564
2	·616	·574	·536	·500	·478	·467	·457	·435	·407	·387	·379	·375
$2\frac{1}{2}$	·527	·481	·438	·400	·377	·365	·355	·333	·304	·285	·277	·274
3	·463	·415	·372	·333	·311	·299	·289	·268	·240	·222	·215	·212
$3\frac{1}{2}$	·416	·367	·324	·286	·263	·252	·243	·222	·196	·180	·173	·170
4	·379	·330	·287	·250	·229	·218	·209	·189	·166	·149	·144	·141
5	·324	·276	·235	·200	·180	·170	·162	·145	·124	·113	·105	·103
6	·285	·238	·199	·167	·148	·139	·132	·116	·0974	·0859	·0814	·0794
8	·233	·189	·154	·125	·109	·102	·0954	·0825	·0670	·0579	·0544	·0529
10	·200	·158	·126	·100	·0862	·0794	·0741	·0631	·0501	·0427	·0398	·0394

Let the student notice the sort of difference that exists between a curve pv = constant, and $pv^{1\cdot0646}$ = constant, and remember that there are some practical men who treat pv = constant, as if it were the saturation curve ; some people treat it as if it were an adiabatic curve for steam, and some others call it vaguely "the theoretical curve for expansion."

CHAPTER XX.

PROPERTIES OF GASEOUS FLUIDS.

186. A pound of fluid stuff has three qualities, its pressure assumed to be the same everywhere in it, its temperature assumed to be the same everywhere in it, and its volume. Thus a pound of air at 0° C. (or $t=274$) and at atmospheric pressure (or $p=2{,}116$ lbs. per square foot) has a volume v of 12·39 cubic feet, and it is very nearly true that for all values of p, v and t

$$\frac{pv}{t}=95{\cdot}7 \quad . \quad . \quad . \quad . \quad . \quad . \quad (1)$$

Hence if we know any two of p, v and t we can calculate the other. And so we say that if any two are known, the state of the stuff is known.

Again, a pound of any of the following gases has a law like

$$\frac{pv}{t}=R \quad . \quad . \quad . \quad . \quad . \quad . \quad (2)$$

Where R is given in the following table. The law is not strictly true for any gas, but it is so nearly true that (2) may be used in all engineering calculations. The law connecting p, v and t for any substance is called its **characteristic.**

In Art. 172 I give some exercises on the calculation of p or v or t when the other two are given. I give here a table of such properties and laws of the gases with which engineers concern themselves, as are necessary in engineering calculations. The reasoning which has led us from experimental facts to these laws or rules will be found in Chap. XXXI. The student will find his knowledge of the subject and security in thinking about it greatly increased by reading Chap. XXX. on the Kinetic theory.

187. Properties of Gases. The unit of heat is what is equivalent to 774 or 1,393 foot-pounds. C_v and k are the specific heats at constant volume in heat units and foot-pounds. C_p and K are the specific heats at constant pressure in heat units and foot-pounds.

p is pressure in pounds per square foot at London.

v volume in cubic feet of 1 lb. of stuff.

t absolute temperature centigrade.

$$\frac{pv}{t} = R = K - k, \quad \frac{K}{k} = \gamma$$

Substance.	C_v	C_p	k	K	R	γ
Air	·169	·238	234·5	330·1	95·67	1·407
Oxygen	·156	·218	216·3	302·9	86·60	1·466
Hydrogen	2·416	3·406	3354	4729	1375·0	1·410
A	·1802	·250	252·3	349·4	97·16	1·385
B	·1889	·258	264·5	361·3	96·88	1·367
D	·1803	·250	252·4	349·4	97·01	1·387
E	·1902	·260	266·3	363·2	96·88	1·364
F	—	·25	—	—	—	—
Carbonic acid [1]	—	·216	—	—	62·58	—
Carbonic oxide	·173	·243	241	338	98·9	1·403

Superheated steam. C_p is usually supposed to be 0·475, but this is more than doubtful. Mr. McFarlane Gray thinks C_p to be $0{\cdot}3864 + 9 \times 10^6 pt^{-3{\cdot}5}$. In Chapter XXXI. I show that if Regnault's results are to be relied upon, then C_p is ·305 at 0° C., ·36 at 100° C., ·43 at 150° C.

I give a characteristic for steam in (2) Art. 371, which is however probably untrue except near saturation. This seems the best result at present available, and yet there is a consensus of opinion among physicists that vapours tend to become more and more nearly constant in their specific heat at constant pressure as the temperature increases.

A is the usual mixture in gas or oil engine cylinders using coal gas, before ignition; and B is the mixture after ignition.

D is the usual mixture in gas engine cylinders using Dowson gas, before ignition; and E is the mixture after ignition.

F is the usual mixture of furnace gases from boilers when 24 lbs. of air is admitted per pound of coal.

[1] Carbonic acid is so far from being a perfect gas that we can only say that C_p from 15° C. to 100° C. is ·2025, and from 11° C. to 214° C. it is ·2169, the mean ratio of its specific heats being 1·30. It is my opinion that there is no possible explanation of the increasing values of C_p both for carbonic acid and steam except that of dissociation, although chemists ridicule the idea of possible dissociation at these low temperatures.

188. Formulæ for Gases. All energy in foot-pounds. One pound of gas. Only true for gases which satisfy (2).

$$\begin{aligned} dH &= k\,.\,dt + p\,.\,dv \\ &= K\,.\,dt - v\,.\,dp \\ &= \frac{1}{\gamma - 1}\,d(pv) + p\,.\,dv \\ H_{12} &= \frac{1}{\gamma - 1}\,(p_2v_2 - p_1v_1) + \text{work done} \end{aligned}$$

H_{12} is the total heat given in any kind of change from the state p_1, v_1, t_1 to p_2, v_2, t_2.

Expansion according to the law $pv^s = c$, a constant, the work done is $\frac{c}{1-s}\left(v_2^{1-s} - v_1^{1-s}\right)$ and the heat given to the gas during expansion $= \frac{\gamma - s}{\gamma - 1} \times$ work done.

Expansion according to the law $pv = c$, a constant, the work done is $c\ log._e \frac{v_2}{v_1}$ and the heat given to the gas during expansion is equal to the work done.

In gases the entropy $\phi = k\ log.\ t + R\ log.\ v +$ constant.

The intrinsic energy $E = kt +$ constant.

EXERCISE. If H_2O can be in the state of a perfect gas, its density relatively to hydrogen is in the proportion of 2 + 15·88, or 17·88 to 2, or 8·94. Hence if the R of hydrogen is 1375·0, the R of gaseous H_2O is 154.

For the various values of the pressure and temperature of Table I., Art. 180, calculate v if $pv/t = 154$. The answers are headed v in the table.

EXERCISE. The fractional difference between the volume of a pound of saturated steam u, and of gaseous H_2O, or $\frac{v - u}{v}$ being called x; plot log. x and log. p on squared paper and see if there is such a law connecting them as

$$x = \cdot 000101\ p^{0 \cdot 443}$$

which has been found by one of my students.

189. To find the specific heats, K and k, of a mixture of gases. If we have w_1, w_2, w_3, &c., lb. of gases whose specific heats are K_1, K_2, &c. ; k_1, k_2, &c. Then

$K = (w_1K_1 + w_2K_2 + \&c.)/(w_1 + w_2 + \&c.)$ and $k = (w_1k_1 + w_2k_2 + \&c.)/(w_1 + w_2 + \&c.)$

Important Results to be Checked by Students.

Table I.—One cubic foot of coal gas with the following composition (by volume), and 5·76 cubic feet of air, and 4·5 cubic feet of the products of a previous

combustion. What I call c_p and c_v for each kind of gas, are capacities for heat per cubic foot. q is the amount of each constituent in cubic feet to one cubic foot of coal gas.

COAL GAS ENGINE MIXTURE BEFORE COMBUSTION.

	cubic ft. q	c_p	c_v	qc_p	qc_v
Hydrogen	0·46	·2359	·99 × ·168	·1085	·4554 × ·168
Carbon monoxide.	0·075	·237	1 ,,	·0178	·0750 ,,
Marsh gas . . .	0·3950	·3277	1·54 ,,	·1294	·6082 ,,
Olefiant gas . . .	0·0380	·4106	2·03 ,,	·0156	·0771 ,,
Nitrogen	0·0050	·237	1 ,,	·0012	·0050 ,,
H_2O vapour . . .	0·0200	·2984	1·36 ,,	·0060	·0272 ,,
Air	5·76	·2374	1 ,,	1·3680	5·760 ,,
Products	4·5	·2581	1·124 ,,	1·1614	5·058 ,,
Total	11·253	—	—	2·8079	12·066 × ·168

Hence for the mixture $c_p = 0·2496$, $c_v = 0·1802$; ratio 1·385; difference ·0694.

COAL GAS ENGINE MIXTURE AFTER COMBUSTION.

	cubic ft. q	c_p	c_v	qc_p	qc_v
H_2O vapour .	1·3714	·2984	1·36 × ·168	·4092	1·865 × ·168
Carbon dioxide .	0·5714	·3307	1·55 ,,	·1889	·8855 ,,
Nitrogen . . .	4·5554	·2370	1 ,,	1·0790	4·5554 ,,
Total	6·4982	—	—	1·6771	7·3059 × ·168

Or for the mixture $c_p = 0·2581$, $c_v = 0·1889$; ratio 1·367; difference ·0692.

DOWSON GAS ENGINE MIXTURE BEFORE COMBUSTION.

	cubic ft. q	c_p	c_v	qc_p	qc_v
Hydrogen	·1873	·2359	·99 × ·168	·0442	·1854 × ·168
Carbon monoxide	·2507	·237	1 ,,	·0594	·2507 ,,
Marsh gas	·0031	·3277	1·54 ,,	·0010	·0048 ,,
Olefiant gas . . .	·0031	·4106	2·03 ,,	·0013	·0063 ,,
Nitrogen	·4898	·237	1 ,,	·1161	·4898 ,,
Carbon dioxide	·0657	·3307	1·55 ,,	·0217	·1018 ,,
Air	1·1325	·2374	1 ,,	·2689	1·1325 ,,
Products	2	·2594	1·1323 ,,	·5188	2·2646 ,,
Total	4·1322	—	—	1·0314	4·4359 × ·168

$c_p = ·2496$, $c_v = ·1803$; ratio 1·385; difference ·0693.

DOWSON GAS ENGINE MIXTURE AFTER COMBUSTION.

	cubic ft. q	c_p	c_v	qc_p	qc_v
Water vapour . .	0·2019	·2984	1·36 × ·168	·0602	·2746 × ·168
Carbon dioxide .	0·3279	·3307	1·55 ,,	·1084	·5083 ,,
Nitrogen	1·3845	·2370	1 ,,	·3281	1·3845 ,,
Total	1·9143	—	—	·4967	2·1674 × ·168

c_p = ·2594, c_v = ·1902 ; ratio 1·3637 ; difference ·0692.

190. When we develop thermodynamic rules (Chap. XXX.) for all kinds of stuff, it is an excellent exercise to apply them to the case of a gas which approximately satisfies (2), Art. 186. But the student must remember that (2) is only approximately true for any substance. It is very nearly true in air, nitrogen, oxygen, and hydrogen. In nitrogen and air, $\frac{pv}{t}$ decreases slightly as p increases. For hydrogen, $\frac{pv}{t}$ increases as p increases. An examination of the more correct characteristic for carbonic acid will show that (2) is nearly true at the temperatures and pressures which exist in ordinary chimneys and flues. It is not very wrong to assume, as I shall do in exercise work, that (2) is true for superheated steam ; our knowledge of water in this state is described in Chap. XXXII.

The important fact to remember is this, that there is some law (called its *characteristic*) connecting the p, v and t of a pound of any kind of stuff, although our knowledge of it may be quite defective.

Again, the state of a pound of water stuff consisting of x lb. of steam, and $1 - x$ lb. of water is supposed to be completely known to us (it is well to recollect that we suppose the temperature the same everywhere in the stuff) if we know its v and its p, or its v and its t. It is a peculiar case this of change of state, because there is a discontinuity, a sudden change from water to steam, and if the pressure is known the temperature is already known, so that there must be a second independent thing given, such as v or x. If v is known, x can be found (or indeed if x is known, v may be found). For in the tables of Art. 180 if we know p or t, we know u, the volume of a pound of steam ; here we have x lb. of steam, so that its volume is xu, and as the volume of the water is very small, we neglect it in our steam engine calculations, so that $v = xu$.

CHAPTER XXI.

WORK AND HEAT.

191. THERE are many forms of energy which may be given to or given out by bodies in Nature, but in our study of thermodynamics we recognise only two:—

1. **Mechanical work** done by a fluid. If the volume increases from v to $v + \delta v$, we say that the work done by the fluid is more and more nearly $p \,.\, \delta v$ foot-pounds, as the change of volume δv is considered to be smaller and smaller. Indeed, I am not sure that the best definition of pressure is not this: If fluid has already done work W, and if in the increase of volume δv the extra work δW is done, then $p \,.\, \delta v = \delta W$, or rather

$$p = \frac{dW}{dv}$$

That is, pressure is the rate at which work is done per cubic foot of expansion.

Of course if δv is negative; if the volume gets less, the work done *by* the fluid is negative; that is, work is done *upon* it.

Observe that the most immediate way of finding δW is through the infinitely small change of volume δv. We could calculate δW in more laborious ways from knowing infinitely small changes in pressure p and the temperature δt.

2. **Heat** δH given to the fluid when it changes its state in any way.

If the change of state is an infinitely small one we can calculate δH from our knowing any two of the changes δt or δv or δp. The changes being infinitely small we can say that

$$\begin{aligned} \delta H &= k \,.\, \delta t + l \,.\, \delta v \quad \ldots\ldots\ldots\ldots (1) \\ &= K \,.\, \delta t + L \,.\, \delta p \quad \ldots\ldots\ldots\ldots (2) \\ &= P \,.\, \delta p + V \,.\, \delta v \quad \ldots\ldots\ldots\ldots (3) \end{aligned}$$

where k, l, K, L, P and V are numbers which we know if we know all the properties of the stuff. These numbers are called specific heats or latent heats or capacities, and they may be quite different in one

state of the stuff from what they are in another. We might have expressed δW in some similar way, but how cumbrous and unnecessary it would have been! Now, just as $\delta W = p . \delta v$, so there is a much quicker way of calculating δH than by either (1), (2) or (3). There is a property of the stuff called its **entropy** ϕ, which is such that any change in it, $\delta\phi$, if multiplied by t the absolute temperature, gives δH or

$$\delta H = t . \delta\phi \quad . \quad . \quad . \quad . \quad . \quad . \quad . \quad . \quad (4)$$

When stuff changes in state we can use either (1) or (2) or (3) to calculate the amount of heat given to it, but if we only know the change in ϕ, the rule (4) is of all ways the easiest for calculation.

The most general statement of the laws of thermodynamics is this:

When a body changes its state and has heat energy δH given to it, and it gives out mechanical energy δW, the intrinsic gain of energy is $\delta H - \delta W$; call this δE and use the name "intrinsic energy" for E. This is the total energy actually in the stuff.

1st Law. The E in the stuff is always the same when the stuff returns to the same state; in fact, E can be calculated if we know p and v, or p and t, or v and t.

2nd Law. The ϕ of the stuff is always the same when the stuff returns to the same state; in fact, ϕ can be calculated if we know the state.

192. First Law. A great number of practical problems are solved at once if we remember the first law, and if we know how to calculate the intrinsic energy.

Now we do not know the real intrinsic energy of any stuff, but we do know in many cases how much greater it is in one state than in another. For example: In air, oxygen, nitrogen, hydrogen, and other gases we find it nearly true that the intrinsic energy depends only on the temperature. Thus, when the temperature keeps constant, if the stuff expands doing work, the amount of heat given is exactly equal to the work done, that is, there is no gain or loss of intrinsic energy. When no work is done (volume constant) the heat given to a gas is all stored as intrinsic energy. Now it is found that the heat given to a gas at constant volume to raise it from t_0 to t is $k\ (t - t_o)$ where k is a constant quantity called the specific heat at constant volume. As we are only concerned with differences we may say that the intrinsic energy in a pound of stuff is kt, although we can attach no meaning to such a statement at such low temperatures that the stuff no longer behaves like the mathematical substance called a perfect gas.

EXERCISE 1. What heat must be given to a pound of gas when it changes in volume from v_1 to v_2, its pressure p remaining constant?

Answer. Heat = gain of intrinsic energy + work done. The work done = $p(v_2 - v_1)$. To find the gain of intrinsic energy we must find the change of temperature. The stuff follows the law $pv = Rt$. Hence $t_1 = \frac{pv_1}{R}$, $t_2 = \frac{pv_2}{R}$; gain of intrinsic energy = $k(t_2 - t_1) = \frac{k}{R}p(v_2 - v_1)$.

Hence heat = $\frac{k}{R}p(v_2 - v_1) + p(v_2 - v_1)$

$$= p\left(\frac{k}{R} + 1\right)(v_2 - v_1).$$

This may be put in many shapes. Thus $pv_2 = Rt_2$, $pv_1 = Rt_1$ and the above becomes $(k + R)(t_2 - t_1)$. Now, if we say "Heat given = specific heat K at constant pressure, multiplied by change of temperature" we see that $k + R = K$.

EXERCISE 2. When a pound of gas changes in any way, what is the heat given to it? *Answer.* Heat = $k(t_2 - t_1)$ + work done.

We see therefore that the question cannot be answered in numbers unless we know the work done. Calling the work done W, and seeing that $t_2 = \frac{p_2v_2}{R}$, $t_1 = \frac{p_1v_1}{R}$.

$$\text{Heat} = \frac{k}{R}(p_2v_2 - p_1v_1) + W.$$

This formula is of great value in air engine, gas engine and oil engine work.

EXERCISE 3. A pound of gas at 400° C., $p = 10{,}000$ lbs. per square foot whose R is 95·67, what is its volume?

Answer. As $\frac{pv}{T} = 95{\cdot}67$. $v = 5{\cdot}729$.

It receives 7×10^5 foot-pounds of energy as heat at constant volume, find its new pressure and temperature.

Answer. The heat is all stored as intrinsic energy, and as $k = 252{\cdot}3$ (see Art. 187), the change of temperature is $7 \times 10^5 \div 252{\cdot}3$ or 2,775° C. It is easily seen that the new pressure is 3,300 lbs. per square inch.

EXERCISE 4. Given a p, v diagram for a pound of one of the gases of the table Art. 187, find the rate of reception of heat.

$$\delta H = k \cdot \delta t + p \cdot \delta v$$

or

$$\frac{dH}{dv} = k\frac{dt}{dv} + p \quad \ldots\ldots\ldots \quad (1)$$

We shall call this h.

It is evident then that our answer is just of the **same dimensions as a pressure;** the one being "mechanical energy given out

by the stuff per unit increase of volume," the other being "heat energy taken in by the stuff per unit increase of volume." Suppose we get an indicator diagram and we do not know the temperature anywhere, we only see p drawn to scale, we know not what scale, except that $\frac{dH}{dv}$ or h must be shown to the same scale.

It is convenient to change (1).

As $t = \frac{pv}{R}$, $\frac{dt}{dv} = \frac{1}{R}\left(p + v\frac{dp}{dv}\right)$. Hence (1) may be written, since $R = K - k$ and K/k is called γ

$$h = \frac{k}{R}\left(p + v\frac{dp}{dv}\right) + p$$

or

$$h = \frac{1}{\gamma - 1}\left(v\frac{dp}{dv} + \gamma p\right) \quad . \quad . \quad . \quad . \quad . \quad (2)$$

This is really the same as (1), but it will be observed that we can get h in terms of p without knowing how much stuff is present, and we need not care what are the scales of p or v.

193. The following numbers were measured on a **gas engine indicator** card of the stuff A of the table Art. 187, whose γ is 1·385. The stuff was in a cylinder whose clearance volume was known, and of course this is included. The student will do well to draw the diagram from the dimensions given. If he does so he will get much more accurate answers.

v.	p.	$\delta p/\delta v$.	average v.	average p.	h or $\frac{dH}{dv}$
Compression					
25	14·7				
20	19·5	- 0·96	22·5	17·1	5·92
14	29·7	- 1·70	17	24·6	13·8
10	45·2	- 3·88	12	37·5	14·6
Expansion					
10	45·2				
10·2	79·7	173	10·1	62·4	4760
10·4	123·2	218	10·3	101·5	6210
10·6	157·7	173	10·5	140·4	5230
10·8	181·7	120	10·7	169·7	3930
11·0	188·2	33	10·9	184·9	1590
12·0	166·2	- 22	11·5	177·2	- 20·8
13	146·2	- 20	12·5	156·2	- 85·8
15	116·7	- 14·8	14	131·5	- 64·9
17	95·7	- 10·5	16	106·2	- 54·5
19	80·7	- 7·5	18	88·2	- 33·8
21	68·7	- 6·0	20	74·7	- 41·5
23	58·7	- 5·0	22	63·7	- 57·1

It is to be noticed that during compression as v is diminishing or δv is negative, since $\frac{dH}{dv}$ is positive, it means that heat is being lost by the stuff. Until $v = 10{\cdot}9$ in the expansion, notice that the stuff first receives heat and thereafter loses heat. The student ought to draw h to the same scale as that to which pressure is drawn.

If it is required to know rate of reception of heat *per second*, $h \times$ *velocity of piston*, evidently represents what is wanted. For this purpose we may without much inaccuracy imagine the connecting rod to be infinitely long; therefore we describe a semicircle on the distance which represents to scale the length of the stroke, and we multiply the ordinate of our h diagram by the ordinate of the semicircle for any position in the stroke.

It is obvious that an exercise like this well carried out will teach students a great deal more than may be described here.

If an expansion curve follows the law $pv^s = c$ a constant, as $p = cv^{-s}$.

$$v\frac{dp}{dv} = -sp$$

Hence (2) becomes

$$h = \frac{1}{\gamma - 1}(-sp + \gamma p) = \frac{\gamma - s}{\gamma - 1}p$$

Thus in the latter part of the above *expansion*, if we plot log. p and log. v on squared paper, we shall find $pv^{1{\cdot}575} =$ constant, and hence $h = -0{\cdot}50\,p$.

Again, in the above *compression* it will be found that $pv^{1{\cdot}205}$ is constant, and therefore $\frac{dH}{dv} = 0{\cdot}47\,p$.

194. I give a little **thermodynamics** in Chap. XXXI., but I write for students who are supposed to know something of thermodynamics already, and especially the proof of the second law. Elementary students of heat and advanced students who wish to study the philosophy of this subject will find no great help here. I think that the mathematical basis of the second law as given in my book on the Calculus is well worth study. **The course of one's elementary study** is usually this:—1. The equivalence of mechanical and heat forms of energy. 2. When change of state of a body occurs; what is the heat given? what is the work done? how are these usually calculated? 3. The mathematical conception, a Carnot cycle, stuff taking in heat H when expanding at constant temperature T; giving out heat h when being compressed at constant temperature t; when change of temperature occurs it is due to

adiabatic expansion or compression. 4. An engine which could follow a Carnot cycle is reversible. The study of this section of the subject may break over the barriers of our mathematical assumptions in regard to the nature of matter and energy and become a study of the universe. Keeping to mathematics we are led to:—5. All reversible engines working between the same higher and lower temperatures are equally efficient, and therefore this efficiency depends upon the temperatures alone. 6. Define temperature to be such that in a reversible engine

$$\frac{\textit{Nett work}}{H} = \frac{T - t}{T}$$

7. Calculate what this scale of temperature must be by calculating nett work and H when some particular substance is used whose properties are known. 8. The scale of temperature so found is such that if we can imagine the substance to be one whose intrinsic energy depends only upon its temperature, and if it is also such a substance that its $p\left(\frac{dt}{dp}\right)_{v\ const}$ is a linear function of the scale of temperature employed, then the value of $p\left(\frac{dt}{dp}\right)_{v\ const}$ being called the absolute temperature, the above condition is satisfied. 9. The properties of air, nitrogen and hydrogen are such that we can approximate very closely to the scale of temperature required, and as a help to our recollection of our results we have invented an ideal substance, called a perfect gas, which is such that if t is our absolute temperature, and if v and p are its volume and pressure

$$vp/t = R$$

where R is constant and where t may be taken as $\theta°$ C.$+ 273{\cdot}7$. $\theta°$ C. being the reading on what we call sometimes an air thermometer and sometimes a nitrogen or hydrogen thermometer with delightful vagueness.

195. The fact most impressed upon the young engineer is this, that in trying to convert as much of the heat energy H as possible into the mechanical form, **the temperatures limit our power,** and we can only in the most perfect heat engine convert the fraction $\frac{T-t}{T}$ of the whole.

Carnot thought that when heat fell in temperature and work was done, it was like water falling down a height in a water-wheel. He was wrong. H at the higher temperature T becomes only h at the lower temperature t, the difference $H - h$ being converted into

work w in a perfect engine. Taking it that all energy is in the same units, we have $\frac{w}{H} = \frac{T-t}{T}$.

Instead of thinking of H as analogous with weight of water, let us take $\frac{H}{T}$ as analogous with weight of water.

A weight $\frac{H}{T}$ falling through the height $T-t$ would do the work $\frac{H}{T}(T-t)$, so that the analogy is complete.

196. Lord Kelvin put forward a **suggestion** once that may not probably be acted upon much, until coal is more expensive. It is this. Just as in a heat engine we take in heat H at T, give out heat h at t, converting only the small quantity $w = H - h$ or $H\frac{T-t}{T}$ into work; so in a reversed heat engine, we might take in h at the lower temperature t, do work w and deliver the large amount of heat $h + w$, or $w\frac{T}{T-t}$ at the higher temperature. Many refrigerating machines already work on the principle. Let us take a concrete example.

EXERCISE. Suppose that for 1 lb. of coal whose calorific energy is 8,300 centigrade units of heat, we get 1 brake power hour, using Dowson gas and a gas engine; that is, we get work equivalent to $\frac{1,980,000}{1,393}$ or 1,422 heat units. Suppose that this work is given to a reversed heat engine taking in heat h in air on a cold day at 10° C. the atmospheric temperature, and by compression giving it out at 20° C. Let us imagine this to be done with an efficiency of 90 per cent., which is quite practical. Then the work 1,422 will allow the heat $1,422\frac{274+20}{10} \times \cdot 9$ or 37,620 to be given to the air.

Here then is a comparison:

By direct heating, the usual way, all the heat of the coal being given to the air (it is unusual to give nearly so much), the air gets 8,300 units of heat.

By using a gas engine and reversed heat engine, the heat 37,620 is given to the air.

It looks at first sight like a creation of energy, but the student will see that the heat energy is not created; we have the work 1,422, this is changed into heat, and the extra heat 36,198 is raised in temperature. All that is disadvantageous in the heat engine

becomes advantageous in the reversed heat engine, whether it is used for heating or for refrigerating.

The comparison would be more striking if we assumed that by some electric battery method we could get more useful work from 1 lb. of coal than we can get by using Dowson gas in a gas engine.

197. The reversibility of a heat engine depends upon this, that when the stuff gains or loses heat it shall do so to a body of infinite capacity for heat at the same temperature. In the **Carnot cycle** heat H is taken in at the higher temperature T, heat h is given out at the lower temperature t; change of temperature occurs adiabatically.

Stirling's regenerator produces a reversible heat engine in the same way. Imagine air to be the stuff used. A pound of air expands from v_1 to v_2 at T, taking in the heat $H = RT \log. \frac{v_2}{v_1}$, and doing work equal to H. The air then goes through a passage whose walls have infinite capacity and gradually alter in temperature from T to t, so that the air gets lowered to t in passing through, its volume keeping constant.[1] The heat given up by the air and stored in the regenerator is $k\ (T-t)$ the pressure falling. The air is now compressed at the constant temperature t from v_2 to v_1, giving out the heat $h = Rt \log. \frac{v_2}{v_1}$, the work done upon it being equal to h. It is now passed in the reversed way through the regenerator, taking in the heat $k\ (T'-t)$ in reaching its initial condition, volume v_1, temperature T.

The regenerator gives out the same heat that it took in. At every point in the passage through it, the air gives up or takes heat from a part of the regenerator which is at the same temperature as itself. The heat taken in was H; the heat given out was h; the net work done was $H-h$, and we see that $\frac{H}{h} = \frac{T}{t}$, so we have the efficiency $\frac{T-t}{T}$ as before. The student can work out the Ericsson form for himself.

The **Joule air engine** is not reversible. The stuff takes in heat at constant pressure and gives it out at lower constant pressure, the other two parts of the cycle being adiabatics. It is specially interesting because in its reversed form it is the best known form of refrigerating machine.

[1] Ericsson let its pressure keep constant.

CHAPTER XXII.

WORK AND HEAT. ENTROPY.

198. I TAKE it that my readers know something of thermodynamics already. The application of the above notions to chemical and physical questions generally will lead to the study of the *availability* of the heat in a system of bodies whose temperatures are not the same. With this matter, so all-important in physical chemistry, the engineer need not concern himself; he is more concerned to study thermodynamics from the entropy point of view, because he has one stuff at the same temperature and pressure throughout. I have given the mathematics of the subject in Chap. XXXI.

199. If stuff is at the absolute temperature t and we give the small amount of heat δH to it, we say that we give it the **entropy** $\frac{\delta H}{t}$. Engineers seem to have great difficulty in understanding why we introduce the notion of this ghostly quantity, but they must get accustomed to it. The entropy of a body is said to be its ϕ. If a body has the entropy ϕ, the pressure p, the temperature t, the volume v, and the intrinsic energy E, and receives heat, does work, goes through all sorts of changes, and is brought back to the same p and v again, it will be found that it is also at its old t, that its E is the same, and also its ϕ is the same. The heat given to and taken from the body are by no means the same; the work done by and upon the body are by no means the same; but the entropy given to and taken from the body are exactly the same.

It is a mathematical idea which must be taken in, and it is almost impossible to get the idea without working exercises on heat engines. There is **no good analogy** to help the beginner, but I may try this one.

When a body changes its state by a small amount and we have

given to it the heat energy δH, and let it give out the mechanical energy δW, and if all sorts of such changes take place and the body comes back to its old state again, how do we take account of what has happened :—

1. If we reckon up all the work done *by*, and done *on* the stuff we do not find that the accounts balance.

2. If we reckon up all the heat given to, and given out by the stuff we do not find that the accounts balance.

3. If we look upon all the work and heat as energy and calculate it all in foot-pounds, we find that the account does balance.

Now, is there any way in which we can make the work account balance by itself? Yes; when the work δW is done, do not reckon it up directly, but divide by the p at the time, and *then* reckon up: what we really reckon up is $\delta W \div p$ or δv, the mere change of volume, and this *must* come back to the same value again.

Similarly, if we divide every δH by t, so that when 1,000 units of heat are taken in at the constant temperature 500, we say "the entropy added is $\frac{1000}{500}$ or 2," and again when we take out the heat 800 at the constant temperature 400 we say, "the entropy taken away is $\frac{800}{400}$ or 2"; if we take care to reckon in this fashion, every amount δH being divided by the t at the time, and if we call the δH divided by the t by the name, entropy, we shall find that when the stuff is brought back to its old state again, we have just given out as much entropy as we have taken in. The account balances exactly.

Is there any other good analogy? Many a time have I worried over this pedagogic difficulty. How to give this powerful idea in a simple way. What is the use of trying to prove this second law of thermodynamics unless one knows that one can comprehend it when one has proved it? And so many men prove it in books and talk glibly about it, to whom it is a mere bit of mathematics! Is it a name for its unit that is wanted—then here I give it a name for the first time. When 1,800 units of heat are given at the absolute temperature 600, I shall say that entropy of the amount $1{,}800 \div 600$ or 3 *Ranks* is given to the body. This will be 3 Ranks whether the heat is in Fahrenheit units at absolute Fahrenheit temperature, or Centigrade units at absolute Centigrade temperature. The name **Rank** I take from the name of **Rankine** who first used ϕ and gave it a name which I need not now

mention, as everybody uses another name '**entropy**.' In general equations entropy is measured as

$$\int \frac{d\text{heat received in work units}}{\text{absolute temperature of reception}}$$

so that Ranks must be multiplied by Joule's equivalent.

200. Latent heat is usually given to water kept at constant temperature, to convert it into steam; in this case the gain of entropy is easily calculated. It is the latent heat divided by the absolute temperature.

When the temperature of a body changes as it receives heat, we have to calculate the gain of entropy by small amounts and add up. The gain $\delta\phi$ is the gain of heat δH, divided by the absolute temperature t. Thus a pound of water receives heat δH, which in heat units is very nearly δt when being heated from t to $t + \delta t$ (see Art. 208). We say that it has gained the entropy $d\phi = \frac{dt}{t}$ and we must integrate this to get the total gain from the temperature t_0 or

$$\phi - \phi_0 = \text{log. } t - \text{log. } t_0$$

If t_0 is 461 + 32 Fahrenheit or 273·7 Centigrade, the freezing point of water, and ϕ is counted from this, so that ϕ_0 is 0, as I usually employ ϕ_w to denote **the entropy of a pound of water,**

$$\phi_w = \text{log. } \frac{t}{493} \text{ or log. } \frac{t}{273{\cdot}7}$$

Of course ϕ_s for **a pound of steam** is $\phi_w + \frac{l}{t}$. The ϕ of a pound of stuff made up of x lb. of steam and $1 - x$ lb. of water is evidently

$$\phi_w + x\frac{l}{t}$$

201. We shall see in Art. 362 that in **a pound of perfect gas** whose law is $\frac{pv}{t} = R$ where p is in pounds per square foot, and v in cubic feet, if the entropy was ϕ_0 when the stuff was in the state p_0, v_0 and t_0

$$\phi - \phi_0 = k \text{ log. } \frac{p}{p_0} + K \text{ log } \frac{v}{v_0} \quad \ldots\ldots\ldots \quad (1)$$

$$\text{or} = K \text{ log. } \frac{t}{t_0} - R \text{ log } \frac{p}{p_0} \quad \ldots\ldots\ldots \quad (2)$$

$$\text{or} = k \text{ log. } \frac{t}{t_0} + R \text{ log } \frac{v}{v_0} \quad \ldots\ldots\ldots \quad (3)$$

Here k, K and R are in foot-pound units. Or if we divide all across by Joule's equivalent, we get ϕ in Ranks, and we may still use k and K for the specific heat at constant volume, and constant pressure, respectively, in units equivalent to *Ranks*, and if R is known, it is easy to divide it by Joule's equivalent; thus for air, R/J becomes ·0687 ranks. Our numbers are now the same for either scale of temperature.

EXERCISE. One pound of air, $p_0 = 2116$ (one atmosphere), $v_0 = 12{\cdot}39$, $t_0 = 493$ (Fah.) and $R = 53{\cdot}15$, let ϕ_0 be called 0; find ϕ in ranks when $v = 3$, $t = 900$. We find that p would then be $\frac{Rt}{v}$ or 15,950 lbs. per square foot.

K for air in heat units is ·2375, $\frac{R}{774} = {\cdot}0687$, and as $K - k = R$ for any perfect gas when in foot-pound units

$$k = K - R = {\cdot}2375 - {\cdot}0687 = {\cdot}1688 \text{ in heat units.}$$

Hence (1), (2) and (3) become

$$\phi \text{ ranks} = {\cdot}1688 \log. \frac{15{,}950}{2116} + {\cdot}2375 \log. \frac{3}{12{\cdot}39} = 0{\cdot}0041$$

$$= {\cdot}2375 \log. \frac{900}{493} - {\cdot}0687 \log. \frac{15{,}950}{2116} = 0{\cdot}0041$$

$$= {\cdot}1688 \log. \frac{900}{493} + {\cdot}0687 \log. \frac{3}{12\,39} = 0{\cdot}0041$$

so that we see we get the same answer by all the ways of working.

202. The statement that ϕ depends on the state of the stuff, is often put in other ways.

Thus in classes in physics we are taught how Carnot conceived of stuff working in an engine under these conditions;—

1. Receiving heat H at constant temperature T, from a source of heat at the same temperature, expanding and doing work.

2. Expanding adiabatically in a non-conducting vessel, and doing further work, till it reaches the temperature t.

3. Being compressed (having work done upon it) at constant temperature t, and giving up heat h to a refrigerator at this lower temperature.

4. Being further compressed adiabatically so that it shall return to its first condition again.

Carnot showed that this engine is reversible, and that it is not possible to conceive of an engine taking the heat H at T, and giving

up heat at t, which would do more work. We know that the net work done by this perfect engine is $H - h$ (all our measurements of energy being mechanical).

The gain of ϕ in the first operation is $\frac{H}{T}$ and its loss in the third operation is $\frac{h}{t}$ and there is no gain or loss of ϕ in the second or fourth operations.

Our statement as to ϕ is that $\frac{H}{T} = \frac{h}{t}$

$$\text{or } \frac{H-h}{H} = \frac{T-t}{T}$$

That is, the efficiency of our perfect heat engine or of any reversible engine working between the absolute temperatures T and t is $(T - t)/T$. Perhaps the second law of thermodynamics may be better known to students in this form than in the form of Art. 191.

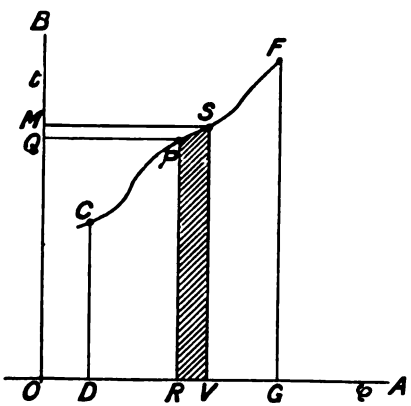

FIG. 221.

203. If we are given the values of any two of the qualities v, p, t, E, and ϕ for a pound of stuff, we are supposed to be able to find all the others.

This statement may be said to be the most general way of presenting the two laws of thermodynamics. Indicator diagrams show the state by the values of p and v, and areas represent work done. Many investigators have in a general way used other diagrams, and indeed a diagram connecting any two of the above properties may be used in studying the behaviour of a pound of stuff.

The $t\phi$ diagram is not particularly valuable in calculations on air or other gases, but for stuff which is in two forms, water and steam for example, the changes which Rankine and Clausius had so much difficulty in calculating, go on visibly on the diagram.

It is to Mr. MacFarlane Gray's persistence that we owe the now common use of the $t\phi$ diagram, so directly applicable to steam engine problems. Even when steam is superheated a good deal, we probably still have both steam and water always present in the cylinder of an engine.

If we make a $t\phi$ diagram for a pound of any kind of stuff. If the stuff changes in state (Fig. 221) from

$$\phi \text{ or } PQ \text{ and } t \text{ or } PR, \text{ to } \phi + \delta\phi \text{ or } MS \text{ and } t + \delta t \text{ or } SV$$

if the heat taken in is δH, the definition of entropy is that $\delta\phi = \frac{dH}{t}$ so that $t \cdot \delta\phi = \delta H$, and therefore the area $PSVR$ represents the heat taken in during the change. Hence in any great change, say from C to F, the total heat taken in is represented by the area $CPSFGDC$.

204. Thus the rectangle $DEFC$, Fig. 222, shows a **Carnot cycle**; heat H is taken in during the isothermal operation DE, at the absolute temperature t_1; heat H_3 is given out during the isothermal operation FC, at the absolute temperature t_3. Now, the distances DG and CG represent these absolute temperatures, and it is evident that as H_1 is represented to scale by the area $DEJG$, and H_3 by $CFJG$ then $H_1 - H_3$ or the area $DEFC$ is the work done.

We have $$\frac{\text{work done}}{H_1} = \frac{DEFC}{DEJG} \text{ or } \frac{DC}{DG}$$

or $$\frac{t_1 - t_3}{t_1}$$

It is worth while for the student to study the figure more carefully, writing 1, 2, 3, 4 for the operations, writing the value of the entropy at each corner and noting that

$$H_1 = t_1(\phi_2 - \phi_4),\ H_3 = t_3(\phi_2 - \phi_4)$$

It makes an excellent set of exercises—I hope that they will not be thought too tedious—to work out very carefully all that occurs in a Carnot cycle performed upon a pound of air; calculating both from the pv diagram point of view and the $\theta\phi$ point of view. The student had better illustrate the work with two figures, one like Fig. 222, the other a pv diagram, both drawn to scale.

We can find the values given in the following table in various ways. In these four exercises I take the most easy way for each operation, but the student ought to accustom himself to all the ways suggested in Art. 192.

EXERCISE 1. A pound of air $v = 3$ cubic feet, $p = 15{,}950$ lbs. per square foot, t (absolute Fahrenheit) $= 900$ (these agree with $R = 53{\cdot}15$ Art. 186) expands at constant temperature to $v = 12$, find the new

p, the heat taken in, the work done, the gain in E the intrinsic energy, and the gain in entropy.

Answer.

$$\frac{p \times 12}{900} = \frac{15{,}950 \times 3}{900} \text{ or } p = 3{,}988.$$

Work done $= pv$ log. 4 (see Art. 188), or 66,310 foot-pounds (or 85·68 in heat units). Gain in entropy = heat 85·68 ÷ temperature

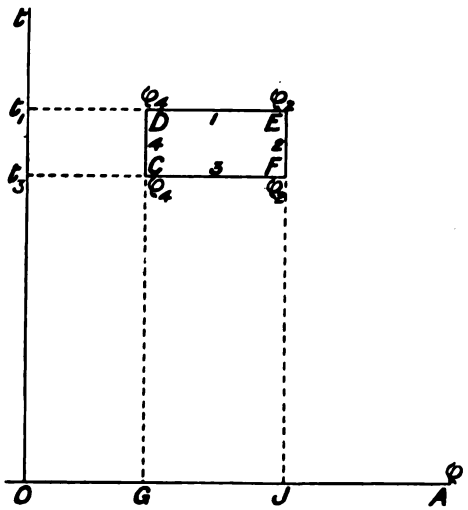

FIG. 222.

900 = 0·0952. Gain in $E = 0$. Let these results be written in the table.

We had better count entropy ϕ as 0 at atmospheric pressure, and 0° C. It is easy to show as in Art. 362 that $\phi = K \log. \frac{t}{493} - R \log. \frac{p}{p_0}$ so that at D, ϕ is 0·00415.

EXERCISE 2. A pound of air $v = 12$, $p = 3{,}988$, $t = 900$, expands adiabatically to $v = 42{\cdot}46$, find the new p and t, &c.

Answer. Expansion being according to the law $pv^{1{\cdot}405}$ constant $p\,(42{\cdot}46)^{1{\cdot}405} = 3{,}988\,(12)^{1{\cdot}405}$, so that $p = 676$. Hence $t = 539$.

EXERCISE 3. A pound of air at $v = 42{\cdot}46$, $p = 676$, $t = 539$, is compressed at constant temperature to the volume 10·62: what is its pressure, the work done upon it, the heat taken from it and the loss of entropy? *Answer.* Its pressure is 2,704. The work done upon it is $Rt \log. \frac{42{\cdot}46}{10{\cdot}62}$ or $53{\cdot}15 \times 539 \log. 4$ or 39,720. This is also the heat

taken from it, or dividing by 774 we have 51·32 units of heat. Dividing this by 539 we find ·0952 the loss of entropy.

EXERCISE 4. A pound of air at $v = 10{\cdot}62$, $p = 2{,}704$, $t = 539$, is compressed adiabatically to $t = 900$: find its v and p and the work done upon it. There is no loss or gain of heat or entropy. *Answer.* $v = 3$, $p = 15{,}950$, $w = -47{,}350$.

Points.	v.	p.	t	R.	ϕ.	Heat taken in (heat and work units).	Work done by stuff.
D	3	15950	900	38·21	·00415		
						47·40	66310
E	12	3988	900	38·21	·09935	66360	
							47350
F	42·46	676	540	5·099	·09935		
						−28·44	−39720
C	10·62	2704	540	5·099	·00415	−39820	
							−47350
D	—	—	—	—	—		

The student will notice that in the Carnot cycle of a perfect gas the works of the two adiabatic operations are equal. This becomes clearer when we recollect that work done in an adiabatic operation is at the expense of intrinsic energy and intrinsic energy of a perfect gas depends only upon temperature.

He is not likely to spend too much time in all kinds of study of the Carnot cycle of a perfect gas. All the calculations are of a nature likely to teach useful lessons, both when they are being carried out and in the study of their results.

205. Gases. *$t\phi$ diagrams.*

1. Take $R = 53{\cdot}15$, $t_0 = 493$, $p_0 = 2116$, $K = {\cdot}238$. Plot ϕ for values of $t = 493$, 550, 600, 650, 700, 750, 800, &c., if $\phi = K \log. \frac{t}{493}$; cut this curve out of a sheet of zinc as a template.

For the values of p, $1\frac{1}{2}$, 2, $2\frac{1}{2}$, 3, $3\frac{1}{2}$, &c., atmospheres, calculate the value of $R \log. \frac{p}{p_0}$.

Now draw $t\phi$ curves of equal pressure, sliding the template horizontally so that each shall represent

$$\phi = K \log. \frac{t}{t_0} - R \log. \frac{p}{p_0}.$$

2. In the same way make a template for $\phi = k \log. \frac{t}{t_0}$ and for $v = 1\frac{1}{2}, v_0, 2, v_0, 2\frac{1}{2}, v_0$, &c., $\frac{3}{4} v_0, \frac{1}{2} v_0, \frac{1}{4} v_0, \frac{1}{8} v_0$, &c., calculate $R \log. \frac{v}{v_0}$ the distance through which the template must slide horizontally.

In this way my students have obtained sheets of curves which they use for rapid calculation of difficult looking problems. Of course isothermal and adiabatic lines are straight horizontal and vertical lines. On such a diagram it is easy to lay out the $t\phi$ expansion curve of a given gas engine indicator diagram.

Superheated Steam.

If from the point of saturation we may imagine the stuff to behave as a perfect gas, the intrinsic energy of 1 lb. of superheated steam is the same as that of 1 lb. of saturated steam at the same temperature, because intrinsic energy of a gas depends upon temperature only. This assumption is good enough for many steam engine calculations. Hence then a $t\phi$ diagram for a perfect gas is also an $E\phi$ diagram. I think that to assume K to be ·475 in any important calculation is very wrong (see Chap. XXXI.), but until a proper measurement is made we may adopt it for academic purposes. The density of steam being taken as $\frac{5}{8}$ that of air, the R of a pound of superheated steam may be taken to be 153. Also $(K - k)\ 774 = R$ so that $k = 0\ 278$.

My students have added to the ordinary $t\phi$ diagram for water and steam, the $t\phi$ diagrams for constant pressure and volume of superheated steam to facilitate some exercise work that is really somewhat misleading. For example: If there is only a pound of dry steam in a cylinder, how does it receive heat if it expands according to the law pv constant, or pv^s constant, if s is less than 1·13 so that we know there is heat received during expansion. As I believe that there is always some water present in cylinders I look upon this as an academic exercise. If it must be worked, I say that we may take it as the case of a perfect gas and the rate of reception of heat per unit change of volume is $\frac{\gamma - s}{\gamma - 1} p$ where γ is 1·3.

In calculating the total heat required for the production of 1 lb. of superheated steam of pressure p and temperature θ_1, I usually assume that water at 0° C. is first converted into saturated steam at the pressure p and the temperature θ° C. receiving Regnault's H, and

that it then receives the further heat $(\theta_1 - \theta) \times 0{\cdot}48$, assuming 0·48 as the constant specific heat of superheated steam. This gives us $606{\cdot}5 + 0{\cdot}305\theta + {\cdot}48\ (\theta_1 - \theta)$. Rankine on the assumption of 0·48 being the constant specific heat of superheated steam from 0° C. gives another formula. But we know that it is wrong to assume 0·48 as the constant specific heat from θ to θ_1; Rankine assumed it correct from 0° C. to θ_1° C., and he is much more incorrect than we.

206. Intrinsic Energy *E of Water-Steam.*

The intrinsic energy of a pound of water at t° F. is the heat, h, of the table, Art. 180. We ought to subtract the work done in expansion, but this is evidently very small.

The intrinsic energy of a pound of steam at t° F. is the heat, H, of the table, (in foot pounds) minus the work done by it in its formation which is pu foot-pounds, or $H - pu$.

The intrinsic energy therefore of 1 lb. of stuff consisting of x lb. of steam, $1 - x$ lb. of water is

$$E = x\,(H - pu) + (1 - x)\,h, \text{ or}$$
$$E = h + x(l - pu) \quad . \quad . \quad . \quad . \quad (1)$$

h and l are in work units or pu is divided by Joule's equivalent 774 if E is to be in heat units. Notice that values of $l - pu$ (called E in the table) are given in heat units.

EXERCISE. A pound of stuff ·7 of steam, ·3 of water, at 95 lbs. per sq. in. (or 323°·9 F.) expands, becoming ·8 of steam, ·2 of water, at 50 lbs. per square in. (or 280°·8 F.); what heat has been given? Consulting the table we see that the gain of intrinsic energy is $251 + {\cdot}8\ (839) - (295{\cdot}1 + {\cdot}7 \times 804{\cdot}9)$ or 63·7 heat units: this is to be added to the work done and the work cannot be calculated without more data.

207. Exercises Illustrating Tests of Wetness of Steam.

1. *Condensing Method.* A **well-lagged tank** containing 200 lbs. of water at 60° F. increases 5 lbs. in weight by the reception of wet steam at 101·9 lbs. per sq. in. pressure, brought by a small connection from the steam pipe; the temperature at the end being 83° F. If no heat has been lost find the wetness of the steam.

Answer. x lb. of steam and $1 - x$ lb. of water cooling to 32° F. from 329° F. would give out the heat $1182{\cdot}2\ x + 299{\cdot}5\ (1 - x)$ heat units, and subtracting 83 − 32 or 51, because each pound of stuff is only reduced to 83° F., we have $5\ (882{\cdot}7\ x + 248{\cdot}5)$ as the total heat

given to the 200 lbs. of water, which being raised from 60° F. to 83°, receives 200 (83 − 60), or 200 × 23, or 4,600 units. Hence 5 (882·7 x + 248·5) = 4,600. Hence x = 0·761, or 76·1 per cent. of the stuff is steam, and 23·9 per cent. is water. The student will notice that the most important defect of this method lies in the difficulty of measuring accurately the increased weight of the tank.

2. *Condensing Method.* Some steam is continually being drawn off from the steam pipe into a **small surface condenser.** Suppose the pressure in the steam pipe to be 101·9 lbs. per sq. in. The water in one hour is weighed and found to be 5 lbs., its temperature being 110° F. The condensing water which passes during the hour is measured and found to be 300 lbs., its temperature upon entering being 60° F., and on leaving being 75° F. What is the wetness of the steam in the pipe?

Answer. Calculating as in the last exercise, if in each pound of stuff we have x lb. of steam, and 1 − x lb. of water: this at 329° F. cooling all to water at 110° F. gives out, per pound,

$$1{,}182\,x + 299{\cdot}5\,(1 - x) - (110 - 32)$$

units of heat. Five times this is equal to the heat given to 300 lbs. of water to raise it 15 Fahrenheit degrees, or 4,500 heat units. Solving the equation, x = 0·769, or 76·9 per cent. of the stuff is steam.

3. *Throttling Method.* A small supply of steam is drawn off from the steam pipe and **throttled** in passing through a well-lagged tap into a well-lagged chamber from which it can escape freely into the atmosphere. If the original steam does not contain much moisture it will be superheated after the throttling, and the temperature of it enables us to calculate the previous wetness.

Suppose the steam at 101·9 lbs. per square inch and 329° F., and that in the chamber at atmospheric pressure the temperature is found on a very accurate thermometer to be 218°·5 F. Very careful measurement of the actual pressure in the chamber must be made by a barometer; suppose that this is found to be 14·35 lbs. per square inch [prove that a barometric height of 29·14 inches corresponds to 14·35 lbs. per square inch.] Now find by the table, Art. 180, the energy in 1 lb. of superheated steam of the pressure 14·35 and temperature 218°·5 F. Saturated steam at this pressure would be at the temperature 210·8. For a pound of such saturated steam H of table would be 1145·4; add to this the heat required to superheat it from 210°·8 F. to 218°·5 or 0·48 × 7·7, or 3·7 units, so that the heat of formation of such superheated steam from 32° F. is 1149·1. Now x lb. of steam, and

$1 - x$ lbs. of water had the total heat $1182{\cdot}2\,x + 299{\cdot}5\,(1 - x)$. Putting this equal to 1149·1 we find $x = {\cdot}9626$ or 96·26 per cent. of the stuff is steam.

The thoughtful student must have met with some difficulty in working the above exercise, which will be cleared by the following.

EXERCISE. Steam at p_1, θ_1° F. and dryness x_1, is throttled, becoming steam at p_2, θ_2° F. and dryness x_2. If the other numbers are given, calculate x_2 on the assumption of a perfectly non-conducting pipe and valve.

Let us study what occurs at a cross-section where the steam is at p_1. Every pound that crosses this section carries with it its intrinsic energy which is

$$J(\theta_1 - 32) + x_1(l_1 J - u_1 p_1),$$

if J is Joule's equivalent, l the latent heat, u the volume of a pound of steam. But it also has the work done upon it, the pressure multiplied by the volume, which is $x_1 u_1 p_1$. Hence the energy entering at the section is $J(\theta_1 - 32 + x_1 l_1)$, or its total heat. Similarly coming out at a section where the pressure is p_2 we have per pound of stuff the energy

$$J(\theta_2 - 32 + x l_2).$$

And as we assume just as much energy to leave as to enter,

$$\theta_1 + x_1 l_1 = \theta_2 + x_2 l_2$$

and so x_2 may be calculated.

If at the lower pressure, it is at θ_2° F. but is superheated to θ_3° F., its intrinsic energy is

$$J(\theta_2 - 32 + l_2) + JK(\theta_3 - \theta_2) - p_2 v$$

if v is the volume of 1 lb. of it; but it does work $p_2 v$ in leaving the space, hence we take

$$\theta_1 + x_1 l_1 = \theta_2 + l_2 + K(\theta_3 - \theta_2).$$

Of course our want of exact knowledge of the value of K causes us in such measurements to reduce the amount of super-heating as much as we possibly can.

4. *Melting of ice method.* A well-lagged case contains 30 lbs. of broken ice separated by wire gauze partitions so that the ice exposes a very great surface. The case is exhausted of air, and steam is admitted in such a way as to melt the ice quickly. The total amount of water coming from the box is 36·8 lbs. at 100° F.

Each pound of ice received latent heat 142 units + (100 − 32) or

210 units. Hence the heat received by the ice is 30×210 or 6,300 units.

In each pound of fresh water stuff, if we have x lb. of steam and $1-x$ lb. of water, the total heat given out in cooling to 100° F. is

$$1{,}182{\cdot}2x + 299{\cdot}5\,(1 - x) - (100 - 32)$$

$$\text{or } 882{\cdot}7x + 231{\cdot}5$$

and as we have 6·8 lbs. of this fresh water stuff

$$6{\cdot}8\,(882{\cdot}7\,x + 231{\cdot}5) = 6{,}300,$$

so that $x = 0{\cdot}787$, or 78·7 per cent. of the stuff entering the box was steam.

5. Let W_1 lbs. of water stuff (each pound of which has x_1 lbs. of steam) enter a well-lagged vessel in which there is already W_2 lbs. of water stuff (each pound of which has x_2 lb. of steam) forming a mixture. What is the dryness of the mixture? Here we say:— The heat of formation of W_1 + the intrinsic energy of the W_2 = the intrinsic energy of the resulting mixture.

Example. The vessel, well-lagged, contains at first 11 lbs. of water (as noted on a gauge glass tube) and 6·64 cubic feet of steam (or 0·25 lb.) at 212° F. A part of the metal of the vessel is exposed to a flame which may be so regulated that for ten minutes there is no alteration in the visible height of the water, the pressure remaining constant: I assume that this flame just compensates for loss of heat by the vessel. Connection is now made with the steam pipe where the pressure is 101·9 lbs. per square inch so that the steam to be tested passes through a thin coil of pipes in the water without much disturbance. At the end of a convenient time the connection is shut off. The gauge glass now indicates that there are 11·6 lbs. of water in the vessel, the pressure being 28·83 lbs. per square inch. What was the dryness of the incoming steam?

Neglecting the volume of 0·6 lb. of water, there is now 6·64 cubic feet of steam at 28·83 lbs. per square inch, or $6{\cdot}64 \div 14{\cdot}04$ or 0·47 lb. of steam. Thus we now have $11{\cdot}6 + 0{\cdot}47$ or 12·07 lbs. present and we used to have $11 + 0{\cdot}25$ or 11·25 lbs. so that 0·82 lb. have entered.

The intrinsic energy was (counting from 32° F.)

$$0{\cdot}25\left(1146{\cdot}6 - \frac{14{\cdot}7 \times 144 \times 26{\cdot}43}{780}\right) + 180{\cdot}5 \times 11.$$

The intrinsic energy now is

$$0{\cdot}47\left(1157{\cdot}6-\frac{28{\cdot}83\times144\times14{\cdot}04}{780}\right)+11{\cdot}6\times216{\cdot}9.$$

The incoming energy was

$$0{\cdot}82\left\{x(1182{\cdot}2)+(1-x)\,299{\cdot}5\right\}$$

Putting the sum of the first and third equal to the second we have $x = 0{\cdot}725$, or 72·5 per cent. of the entering stuff was steam.

I do not describe here the so-called chemical tests, as they are quite valueless.

CHAPTER XXIII.

WATER—STEAM, $\theta\phi$ DIAGRAM. EXERCISES.

208. We find that the law

$$h = \theta - \tfrac{1}{3}\,10^{-6}\,\theta^3, \quad \ldots\ldots \quad (1),$$

the temperature being $\theta°$ C., h being the heat given to a **pound of water** at 0° C. to raise it to $\theta°$ C. under gradually increasing pressure, is fairly well satisfied. If t is the absolute temperature, $t = \theta + 273{\cdot}7$.

Now $d\phi = \dfrac{dh}{t}$. Hence if we were to take it that in water $dh = dt$, $\phi = \log. t + \text{constant}$. If ϕ is taken to be 0 at 0° C. then

$$\phi = \log. \frac{t}{274} \quad \ldots\ldots \quad (2).$$

If however we take the more exact rule given above

$$\phi = 1{\cdot}077 \log. \frac{t}{274} + \left(\frac{t^2}{2} - 556\,t\right) 10^{-6} + {\cdot}116 \quad \ldots\ldots \quad (3).$$

I shall usually take the simpler formula (2) as stated in Art. 200.

209. In all the following academic exercises it is to be understood that the stuff—water and steam—is all at the same temperature. We must be cautious in using the results of such calculations in the consideration of actual steam engine problems.

All the calculations made by Rankine and others proceed on certain assumptions. One assumption made by everybody is that the stuff, water and steam, is **all at the same temperature** at the same instant. Now if it is also assumed that we know exactly **how much water is with the steam,** we have seen that MacFarlane Gray's θ, ϕ diagram (a method which supersedes other more cumbrous methods) enables us to say exactly how much heat is being given to or given

up by the stuff to the metal of the cylinder at every instant during the expansion, and indeed during all the cycle if we still assume that we know exactly how much water and steam we are dealing with. Taking an exact account in this way from experimental results of an actual engine was first done, I think, by Hirn, and the method has been elaborately developed by his pupils. The method is called Hirn's method although it is what any student of Rankine would do without being told. I feel quite sure that a great deal too much has been made of it, and that the results of the elaborate analyses of some of Hirn's followers are of no practical use and indeed give a quite untrue account of what occurs inside the cylinder of a steam engine. I would beg of the student to use these assumptions only

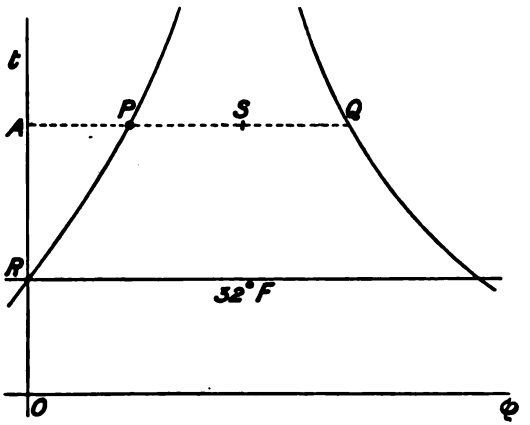

FIG. 223.

in the working of suggestive exercises like those that I have given in Chap. V., and in what follows.

210. A pound of water stuff containing x lb. of steam and $1-x$ lb. of water, at the temperature t has entropy xl/t in addition to what 1 lb. of water has; if l is the latent heat of 1 lb. of steam. Hence in Fig. 223 if the point P represents the ϕ and t of 1 lb. of water and Q represents that of 1 lb. of steam, S will represent 1 lb. of water stuff of which the fraction $\frac{PS}{PQ}$ is steam and the fraction $\frac{SQ}{PQ}$ is water.

EXERCISE 1. A pound of water stuff at $\theta°$ F. contains x lb. of steam and $1-x$ of water, find ϕ, if ϕ is 0 for 1 lb. of water at 32° F.

Graphical Method. In Fig. 223A, where 0 represents 32° F., and any line like ABC is at any particular temperature such as θ° F.; AB represents ϕ_w, AC represents ϕ_s; make $BP'BC = x$. Then AP shows the value of ϕ.

Algebraic Method.—We saw in Art. 200 that the answer is

$$\phi = (1 - x)\phi_w + x\phi_s$$

In case the table is not at hand we may use

$$\phi = \log. \frac{t}{493} + x\frac{l}{t}$$

EXERCISE. One pound of water stuff at 392° F., or $t = 853$ contains 0·9 lb. steam, 0·1 lb. water: it expands adiabatically (that

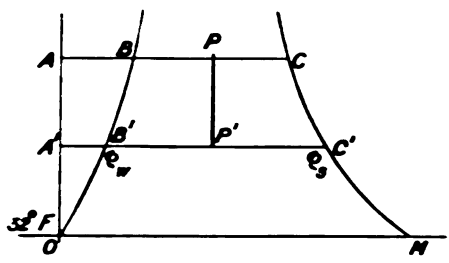

FIG. 223A.

is keeping its ϕ constant) to 216° F., and then contains x lb. of steam, find x.

1st, Graphically. Draw AC, Fig. 223A, for 392° F., and A^1C^1 for 216° F. Let $PB = \cdot9 \times BC$: draw PP^1 vertically: x is the value of $P^1B^1 \div B^1C^1$, and in this case I find it to be 0·78.

2nd, Algebraically. l for 392° F. (or $t = 853$ abs. Fah.) is 836 by the table, and l for 216° F. (or $t = 677$) is 961, and hence

$$\log. \frac{853}{493} + 0{\cdot}9\,\frac{836}{853} = \log. \frac{677}{493} + x\,\frac{961}{677}$$

Hence $x = 0{\cdot}784$.

211. Exercise for a Class of Students.

Let 1 lb. of water stuff, consisting of s lb. of steam and $1-s$ of water at θ° C., expand adiabatically to θ_0° C. Find the p, v diagram, and assuming that the expansion curve follows a law like $pv^k = a$ constant, find k. How does condensation or evaporation go on during the adiabatic expansion?

Method. At the temperature $\theta°$ C. on the $t\,\phi$ diagram, Fig. 224, draw the horizontal ABD. Find C so that $BC/BD = s$; draw other horizontals $A_1B_1D_1$ at various temperatures and the adiabatic vertical CC_1C_0. The ratio of any B_1C_1 to its B_1D_1 is the fractional quantity of steam present and if we neglect the volume of water present, the volume of this steam is the whole volume.

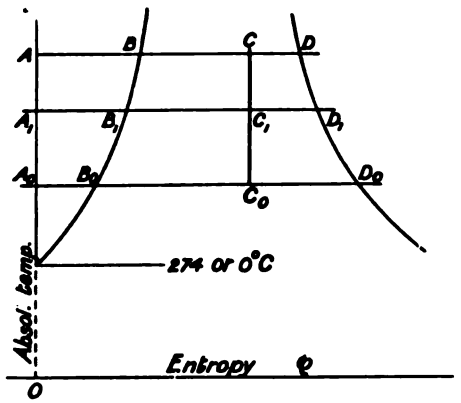

FIG. 224.

Example I. (1). Let $\theta°$ C. be 195° C. (pressure 203·3 lbs. per square inch). Let $s = 1$ so that there is no water present at the beginning of the expansion. Proceeding as directed, a student finds the following figures. u is the volume of 1 lb. of dry steam at each of the temperatures at which a measurement is made, v is the actual volume of steam present. Plotting log. p and log. v on squared paper enables us to find k. x is the amount of stuff in the steam form at every point, and its value shows therefore whether there is evaporation or condensation going on. s is the value of x at the beginning of the expansion.

$\theta°$ C.	p.	x.	u.	v.	log. p.	r.
195	203·3	1	2·242	2·242	2·3081	·3506
180	145·8	·977	3·065	2·994	2·1638	·4763
160	89·86	·944	4·827	4·556	1·9536	·6586
140	52·52	·918	7·995	7·338	1·7204	·8656
120	28·83	·886	14·04	12·44	1·4599	1·0947
100	14·7	·858	26·43	22·68	1·1673	1·3556

Example I. (2) Same as *I.* (1) but begin with $s = 0{\cdot}75$.

Example I. (3) Same as *I.* (1) but begin with $s = 0{\cdot}5$.

Example I. (4) Same as *I.* (1) but begin with $s = 0{\cdot}25$.

Example I. (5) Same as *I.* (1) but begin with $s = 0$.

Example II. Let $\theta°$ C. be 165° C. (101·9 lbs. per square inch). Let lowest temperature be 85° C. and use the above values for s.

Example III. Let $\theta°$ C. be 140° C. (52·52 lbs. per square inch). Let lowest temperature be 85° C.

In every case, plot log. p and log. v on squared paper and find if there is any such law as pv^k = a constant.

Each of the answers in the following table is the mean of the results of four students. They were elementary students and the results are likely to be not quite so correct as those obtained by advanced students.[1]

BEST VALUE OF k IF ADIABATIC EXPANSION IS SUPPOSED TO FOLLOW THE LAW pv^k CONSTANT AS IT VERY NEARLY DOES.

Range of Pressure.	Range of Temperature.	Best values of k for the following values of dryness at beginning of expansion.				
		1·0	0·75	0·50	0·25	0
203 to 15	195° C. to 100° C.	1·129	1·113	1·054	·959	Law untrue.
102 to 8	165° C. to 85° C.	1·129	1·108	1·110	1·022	
53 to 8	140° C. to 85° C.	1·135	1·110	1·069	1·089	
Average values of k . . .		1·130	1·110	1·078	1·023	

Rankine gives the number $k = 10/9$ or 1·111 as correct for the adiabatic expansion of steam, but the details of his calculation are now lost. The formula, $k = 1{\cdot}035 + 0{\cdot}1s$ has been given. The MacFarlane Gray diagram enables elementary students to work easily for themselves what we used to be compelled to take on trust. The above values fit fairly well the rule $k = 1 + 0{\cdot}14s$ for any of the ranges of temperature.

212. To quickly convert a pv diagram of steam into a $t\phi$

[1] Mr. F. W. Arnold assisted in the above work; in his holiday he has done the work very thoroughly, and obtained a most interesting set of relations between k and s and the range of temperature. I wish I could here find space to reproduce the beautiful curves he has drawn. I hope that they may be published elsewhere.

diagram the plan of Art. 183 is the one which I use myself. It may be that shorter methods may be invented, but I like it because it serves to keep general principles well in the mind, and unless one is doing many exercises (a most unlikely thing unless one is engaged in a special kind of investigation) special rules are very easily forgotten. I have used the following method and it may give satisfaction to some students.

Let distances measured vertically from $O'G$, Fig. 225, represent absolute temperature. Let distances measured from OP represent temperatures above 32° F.: the distance from O to O' represents 493·2

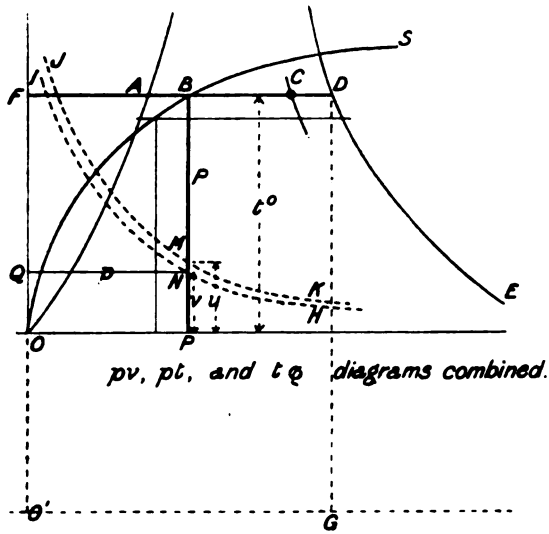

FIG. 225.

and need not be more than indicated. The abscissæ of the curves OA and DE show the values of ϕ_w and ϕ_s. The scale for heat is such that the area of the rectangle $FDGO'$ represents $t \times \phi_s$ units. Draw HNI an actual expansion curve of an indicator diagram, QN representing pressure and PN volume, to any scale which is convenient. At some point N let us know how much water is present in the cylinder and make $MN : NP$ in the ratio of water : steam. Through M draw the curve KMJ whose law is $pv^{1.0646}$ constant. Then if any such line as PNM is drawn, it will show the ratio of water to steam.

Plot the curve OBS whose ordinate PB and abscissa OP represent temperature and pressure of steam from the table, Art. 180. Now at any point P erect the perpendicular PB meeting the curve

OBS in B; draw the horizontal $FABD$ through B and divide AD so that $AC : CD = PN : NM$. The point C is a point in the $\theta\phi$ diagram corresponding to N on the indicator diagram.

All students accustomed to graphical methods are aware, or ought to be aware, of quick methods of dividing lines proportionally to one another; the best method requires a sheet of transparent squared paper, or rather of tracing paper with a number of equidistant parallel lines ruled upon it. It enables one to copy rapidly a curve whose ordinates and abscissæ are altered in any given proportions, and is very valuable if one has much work to do of the same kind.

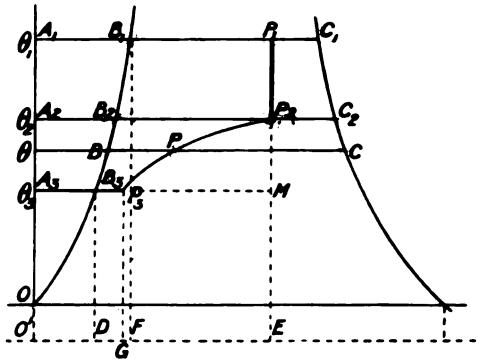

FIG. 226.

After all, however, a student may benefit more from the use of a clumsy method of his own as it keeps elementary principles well before his mind.

213. EXERCISES WITH THE $\theta\phi$ DIAGRAM I. x_1 lb. of steam, $1-x_1$ of water at $\theta_1°$ C. expands adiabatically to $\theta_2°$C., is then released to a condenser at $\theta_3°$ C. The pv diagram for this is bounded by straight lines and one curve.

Make $P_1B_1 \div B_1C_1 = x_1$ on the horizontal corresponding to $\theta_1°$ C. The vertical line P_1P_2 shows adiabatic expansion to P_2 which corresponds to $\theta_2°$ C.

Let there now be the idea that we have a vessel with a pound of water stuff of which the fraction B_2P_2/B_2C_2 is steam, kept at constant volume but lowered in temperature to θ_3. To draw the curve P_2PP_3, that is to find any point P corresponding to any temperature θ. If u_2 and u are the volumes of a pound of steam at θ_2 and θ as shown in the table, Art. 180; as we have the volume at release keeping constant $\dfrac{B_2P_2}{B_2C_2}u_2 = \dfrac{BP}{BC}u$, so that BP may be calculated.

If O^1DE is the horizontal corresponding to the absolute zero of temperature, the area DB_3B_1F represents the heat given to raise the feed water from θ_3 to θ_1; FB_1P_1E, the heatto produce the x_1 lb. of steam, EP_2P_3G is the heat taken *from* the stuff if it were kept in a vessel of constant volume and cooled to θ_3; this we have taken to correspond with the real release; GP_3B_3D is the heat taken from the stuff in the supposed compression of the remaining steam at θ_3° C. till it is all condensed. Hence the work done per pound of steam in a perfect engine would be represented by the area $B_3B_1P_1P_2PP_3B_3$

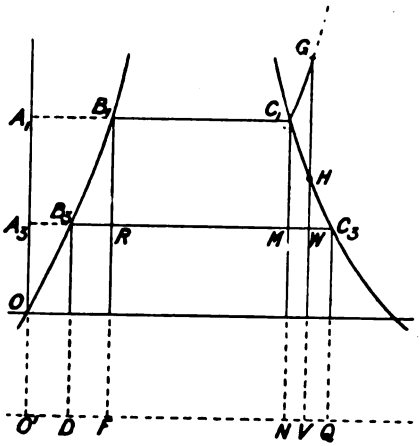

FIG. 227.

and the heat expended $DB_3B_1P_1ED$, the ratio between these being the efficiency.

The area of $P_3PP_2MP_3$ represents the loss of work because the adiabatic expansion has not continued to the temperature θ_3.

If the student's prepared sheet of paper is provided with lines of constant volume, of course the drawing of the line P_2PP_3 gives no trouble.

214. EXERCISE II. A **perfect steam engine** uses steam under the following conditions, find in each case:—

W the work (in heat units) done per pound of steam and w the number of pounds of steam used per hour per horse-power.

h the heat given per lb. of steam. $e = W/h$ the efficiency.

1. Feed water at 100° F. is heated to 329° F. and converted into steam; it is expanded adiabatically to 100° F. and released at 100° F. $W \equiv B_3B_1C_1MB_3$, Fig. 227; $h \equiv DB_3B_1C_1ND$.

Answer. $W = 293$, $h = 1114$, $e = 0{\cdot}262$.

2. During expansion the stuff receives just so much heat as keeps it in the condition of dry saturated steam. $W \equiv B_3B_1C_1C_3B_3$, $h \equiv DB_3B_1C_1C_3QD$.

Answer. $W = 331$, $h = 1379$, $e = 0{\cdot}240$.

3. The stuff is superheated to 410° F. and expands adiabatically to 100° F. Notice that the steam is wet towards the end of the expansion $W = B_3B_1C_1GHWB_3$, $h = DB_3B_1C_1GHWVD$.

Answer. $W = 312$, $h = 1172$, $e = {\cdot}266$.

4. The stuff is superheated to 410° F., expands adiabatically till it is just saturated at H; receives sufficient heat during the remainder of its expansion to 100° F. to keep it in the dry saturated condition. $W = B_3B_1C_1GHC_3B_3$, $h = DB_3B_1C_1GHC_3QD$.

Answer. $W = 336$, $h = 1382$, $e = {\cdot}242$.

5. To compare the above with a Carnot cycle. In the Carnot cycle all the heat is given at 329° F., and the heat is taken out at 100° F. $W = B_1C_1MR$, $h = B_1C_1NF$, $W/h = (t_1 - t_3)/t_1$ or $W = 256$, $h = 882$, $e = 0{\cdot}29$. The results are here tabulated:—

	W. Work per pound of steam in Fah. heat units.	Energy expended in Fah. heat units.	e. efficiency.
1st case, ordinary	293	1114	0·262
2nd ,, with jacket	331	1379	0·240
3rd ,, super-heating	312	1172	0·266
4th ,, super-heating and jacket	336	1382	0·242
5th ,, Carnot cycle	256	882	0·290

Notice that although in all the other cases there is more work done per pound of steam, none of them is so efficient as the Carnot cycle. Cases (1) and (3) are said to be "standard or perfect steam engines following the **Rankine cycle.**"[1]

[1] Lord Rayleigh, in an article in *Nature* (February 18th, 1892), after pointing out that only a small amount of the heat received by the stuff in the formation of superheated steam, is received at the highest temperature [a fact known to every one who uses the $t\phi$ diagram], made the further very important statement:—

"If we wish effectively to raise the superior limit of temperature in a vapour-engine, we must make the boiler hotter. In a steam engine this means pressure that would soon become excessive. The only escape lies in the substitution for water of another and less volatile fluid. But, of liquids capable of distillation without change, it is not easy to find one suitable for the purpose. There is, however, another direction in which we may look. The volatility of water may be restrained by the **addition of saline matters**, such as chloride of calcium or acetate of soda. In this way the boiling temperature may be raised without encountering excessive pressures, and the possible efficiency, according to Carnot, may be increased.

"The complete elaboration of this method would involve the condensation of the

215. The following exercises are just like the above, but they are worked *algebraically.*

It is a good test of a student to find out to what extent he misapprehends the value of such calculations as these.

1ST CASE.—RANKINE CYCLE. DRY STEAM. PERFECT STEAM ENGINE (ADIABATIC EXPANSION).

Knowing the shape of the curve B_2B_1, Fig. 227, it is easy to calculate the area of the figure $B_2B_1C_1M$. But I prefer to take the matter up from first principles.

It is proved in thermodynamics that if in a heat engine the working stuff receives heat H at the absolute temperature t and if t_2 is the temperature of the refrigerator, then the work done by a perfect heat engine would be

$$H\frac{t-t_2}{t} \text{ or } H\left(1-\frac{t_2}{t}\right) \quad \ldots\ldots\ldots\ldots\ldots \quad (1)$$

If one pound of water at t_2 is heated to t_1, and we assume that the heat received per degree is constant, what is the work which a perfect heat engine would give out in equivalence for the total heat? Let all energy be expressed in heat units.

To raise the temperature from t to $t+\delta t$ the heat given is δt, and this stands for H in the above expression. Hence for this heat a perfect engine would give the work

$$\delta t\left(1-\frac{t_2}{t}\right)$$

and the integral of this from t_2 to t_1 is

$$t_1-t_2-t_2\log.\frac{t_1}{t_2} \quad \ldots\ldots\ldots\ldots\ldots\ldots \quad (2)$$

If now a pound of water at t_1 receives the heat l_1 (the latent heat), and is all converted into steam at the constant temperature t_1, the work that is thermodynamically equivalent to this is $l_1\left(1-\frac{t_2}{t_1}\right)$. We see then that the work which a perfect steam engine would give out as equivalent to the heat received per pound of steam is

$$t_1-t_2-t_2\log.\frac{t_1}{t_2}+l_1\left(1-\frac{t_2}{t_1}\right) \quad \ldots\ldots\ldots\ldots \quad (3)$$

It will be found more correct to take h_1-h_2 instead of t_1-t_2 at the beginning.

This may be calculated either on the Centigrade or the Fahrenheit scale, and converted into foot-pounds. A horse-power hour is 33,000 × 60 foot-pounds; so dividing our work into this we find the number of pounds of steam w which a perfect steam engine would consume per horse-power hour when working between the temperatures t_1 and t_2.

---

steam at a high temperature by reunion with the desiccating agent, and the communication of the heat evolved to pure water boiling at nearly the same temperature, but at a much higher pressure. But it is possible that, even without a duplication of this kind, advantage might arise from the use of a restraining agent. The steam, superheated in a regular manner, would be less liable to premature condensation in the cylinder, and the possibility of obtaining a good vacuum at a higher temperature than usual might be of service where the supply of water is short, or where it is desired to effect the condensation by air."

The numbers of columns 10 and 11 of Table II., Art. 180, have been calculated in this way. I assume that in a perfect non-condensing engine the lower temperature is 212° F., and in a condensing engine 100° F.

Mr. Willans used the above as **his standard of comparison** when he published his **non-condensing trials** in 1888; but when he came to publish his **condensing trials** in 1893 he saw that as the perfect engine presumed expansion to very large volumes indeed, no actual engine could approach it in efficiency. He therefore adopted arbitrarily as the standard condensing steam engine, one in which θ_3 is 110° F., but adiabatic expansion ceases and the steam is released at a temperature of 170° F. The student who has done the Exercise, Art. 213, will see that this means the deduction of the area $M P_2 P_3$, Fig. 228, from the whole work per pound of steam $M C_1 B_1 B_3$. He ought to work graphically a few exercises making this sort of assumption, so as to get some idea of its effect in altering our standard. In any case, the standard or perfect condensing engine must be an arbitrary standard. As I have already said, I prefer to take θ_3 as 100° F., and to imagine complete expansion down to that temperature. Any standard of this kind is of a temporary character, and will be given up when it ceases to be commercially profitable to use it. **The only scientific method of stating efficiency** is energy usefully given out by the engine ÷ total energy of the fuel.

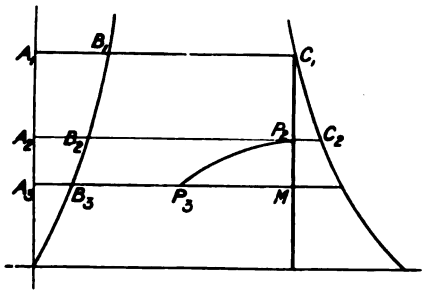

FIG. 228.

In pages 257–8 I give results actually obtained from steam engines, and in each case I have written beside the actual w the w for a perfect steam engine.

EXERCISE 1. In condensing engines test the amount of error in the approximate formula

$$W = 155 + 13{\cdot}1\, p^{\frac{1}{4}}$$

$$W = 14 + {\cdot}872\, \theta.$$

Where θ° F. is the temperature of the steam, p the pressure in pounds per square inch, W the work done (converted into Fahrenheit units of heat) per pound of steam in a perfect steam engine expanding adiabatically.

EXERCISE 2. Mr. Willans was of opinion that the standard or perfect condensing engine ought only to be expected to expand its steam adiabatically to 170° F. and release at 110° F. By thus cutting off the "toe of the diagram" show that, instead of getting the work W we get the work W_1 per pound of steam.

p_1	t_1° F.	W.	W_1.
250·6	401	335·6	300
203·5	383	322·4	286
146·0	356	301·4	264
102·0	329	278·4	240
52·6	284	236·0	197
33·7	257	207·6	168

2ND CASE.—EXPANSION AS DRY SATURATED STEAM. STEAM JACKETING.

Our main reason for jacketing is to prevent condensation and leakage, and these exercises are a good deal misleading; nevertheless it is well to do them, and they are not much more misleading than many other exercises.

A perfect steam engine has its limiting temperatures t_1 and t_2 (absolute). If there is just enough jacketing to keep the steam dry in its expansion, find the work done per pound of steam and the other numbers of the following table. The numbers in the second and third columns of the following table are in Fahrenheit heat units.

Evidently the heat required per pound of steam, in addition to what is wanted for Case 1, is represented by the area NC_1C_2QN of Fig. 227, and the extra work is represented by the area of C_1C_2M.

The ordinate of the curve C_1C_2 is t and its abscissa ϕ_s or, using Centigrade temperature,

$$\log. \frac{t}{273{\cdot}7} + \frac{l}{t}$$

where $l = 606{\cdot}5 - {\cdot}695\theta$ or $797 - {\cdot}695t$

$$\phi_s = \log. \frac{t}{273{\cdot}7} + \frac{797}{t} - {\cdot}695.$$

The area is the integral of $t.d\phi$ or $t\frac{d\phi}{dt}.dt$

$$\frac{d\phi}{dt} = \frac{1}{t} - \frac{797}{t^2}$$

so that the area representing the extra heat given is

$$\int_{t_1}^{t_2}\left(1 - \frac{797}{t}\right)dt = 797 \log. \frac{t_1}{t_2} - (t_1 - t_2).$$

The extra work done is the integral of $(t - t_2)d\phi$ and is

$$(t_2 + 797) \log. \frac{t_1}{t_2} - \left(1 - \frac{t_2}{t_1}\right)(t_1 + 797)$$

When Fahrenheit absolute temperatures are taken, instead of 797 we have 1,434.

	p_1.	Extra heat supplied to keep 1 lb. of steam dry.	Total work done per lb. of steam, including jacket steam.	Pounds of steam needed per horse-power hour.	Pounds of steam per horse-power hour if expansion is adiabatic.
Non-condensing, lowest temp. 212° F.	250·3	164·9	189·4	13·4	12·3
	203·3	150·4	173·0	14·7	13·4
	145·8	131·4	153·8	16·5	15·3
	101·9	106·7	132 2	19·2	18·1
	52·5	71·5	88·48	28·7	27·6
Condensing, lowest temp. 100° F.	250·3	319·3	291·7	8·70	7·3
	203·3	305·8	283·8	9·01	7·6
	145·8	286·3	270·2	9·40	8·1
	101·9	264·1	254·9	9·96	8·7
	52·5	227·1	221·6	11·45	10·1

3RD CASE.—A LARGE AMOUNT OF SUPERHEATING.

In the following exercise the superheating is supposed to be so high that the steam is just not wet at the end of the expansion; the student is expected to work out all the numbers. In these exercises, if the lower temperature is t_2, and after the steam has been produced at t_1 if it is superheated at constant pressure to such a temperature that it will be just saturated after adiabatic expansion to t_2, then the perfect steam engine will, per pound of steam, do work in heat units (Fahrenheit).

$$= t_1 - t_2 - t_2 \log_e \frac{t_1}{t_2} + \frac{L_1(t_1 - t_2)}{t_1} + Kt_1(e^{x/K} - 1) - t_2 x$$

$$= 0{\cdot}305\,(t_1 - t_2) + Kt_1(e^{x/K} - 1)$$

where $x = 1434\left(\frac{1}{t_2} - \frac{1}{t_1}\right)$ $\log. \frac{t_1}{t_2}$ and $K = 0{\cdot}48$

the maximum superheating temperature being $t' = t_1 e^{x/K}$. The specific heat of superheated steam has been taken to be 0·48; the engine is non-condensing, that is, $t_2 = 673$ or 212° F.

p_1.	Amount of superheating (Fahrenheit).	Work in Fahrenheit thermal units per pound. W	Pounds of steam per horse-power hour. w	Pounds of steam per horse-power hour if not superheated. w
52·5	181°	109	23·3	27·6
101·9	298°	179	14·2	18·1
145·8	376°	224	11·4	15·3
203·3	447°	267	9·5	13·4
250·3	500°	298	8·64	12·3

My students have found that the following formulæ give values of W which differ less than one per cent. from the calculated values:

$W = 1{\cdot}648\theta - 178$ for non-condensing, and

$W = 2{\cdot}8\theta - 360$ for condensing engines.

216. EXERCISE 1. The following pressures and volumes being measured on the expansion curve of an indicator diagram, $p = 110$, $v = 1$; $p = 40$, $v = 4$. If the expansion curve is adiabatic, how much water is present with the steam?

Answer. Water per pound of stuff at the beginning 0·896, and at the end 0·838. Or water to steam 8·6 : 1 and 5·2 : 1.

EXERCISE 2. At G (Fig. 82) presumably the end of admission, the volume is 1·4 cubic feet, pressure 51·9 lbs. per square inch (or 283°·2 F.), $u_1 = 8{\cdot}071$, latent heat (Fahrenheit) = 914·5), and thus the indicated steam is $i = 0{\cdot}173$ lb. At F the volume is 4·323 cubic feet, pressure 21·69, and the steam present weighs 0·235 lb.

Assume that the metal of the cylinder is non-conducting, that we have z lb. of *water* present before admission, that i lb. is the indicated steam at G, that the entering steam which has condensed is yi; neglect the steam present at

the end of the cushioning; assume that all the water stuff present is everywhere of the same temperature at any instant, and therefore that the expansion is adiabatic, it is evident that we have the means of calculating y and z.

Note the nature of this assumption. As the metal always does take heat, this action will be represented by there being a little more water present. If

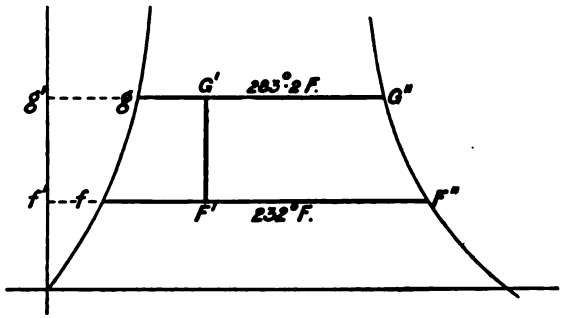

FIG. 229.

the metal really does give heat, because of a steam jacket, this action will be represented by there being a little less water present.

In Chap. XXIV we shall see that it is only for certain calculations that such an assumption is legitimate. The latent heat lyi of yi lb. of steam heats z lb. of water from the back pressure temperature ($p_3 = 3{\cdot}4$ or $t_3 = 146°{\cdot}3$ F. say) to 283°, so that

$$914{\cdot}5y \times 0{\cdot}173 = 137z, \text{ or } y = 0{\cdot}866z \quad \ldots\ldots\ldots \quad (1)$$

Let the whole water stuff present $\cdot173 + z + \cdot173y = w$.

Again, if the adiabatic expansion represented by $G\,E\,Q\,F$ on the indicator diagram is represented by $G'F'$ on the $t\phi$ diagram, $\dfrac{gG''}{gG'} = \dfrac{w}{\cdot173}$

$$\frac{fF''}{fF'} = \frac{w}{\cdot235}, \text{ so that } \frac{gG''}{gG'} \cdot \frac{fF'}{fF''} = \frac{\cdot235}{\cdot173}$$

Hence

$$\frac{gG'}{fF'} = \frac{gG''}{fF''} \cdot \frac{\cdot173}{\cdot235}$$

Now

$$gG'' = \frac{\text{latent heat } 914{\cdot}5}{\text{absolute temp. } 744{\cdot}2°} = 1{\cdot}229; \; fF'' = \frac{952}{693} = 1{\cdot}374$$

$$\frac{gG''}{fF'} = \frac{\cdot173}{\cdot235} \times \frac{1{\cdot}229}{1{\cdot}374} = \cdot660.$$

We have now only to find the two points G' and F' so that they shall be in the same vertical and the distances in this ratio. I have found them by trial and get

$$\frac{gG''}{gG'} = 8{\cdot}72 = \frac{w}{\cdot173}. \quad \text{Hence } w = 1{\cdot}508.$$

Or, without actual trial on a diagram;—By the table, Art. 180, $g'g$ for 283°·2 F. is ·415, $f'f$ for 232° F. is ·342.

Let $g'G' = f'F' = x$, then

$$\frac{x - \cdot 415}{x - \cdot 342} = \cdot 660, \text{ whence } x = \cdot 556$$

$$gG' = \cdot 556 \quad \cdot 415 = \cdot 141 \text{ or } gG'' = 1 \cdot 229.$$

So that there is 7·71 times as much water present as steam at the point of cut off. In fact

$$w\frac{1 \cdot 229}{\cdot 141} \times \cdot 173 = 1 \cdot 508 = \cdot 173 + z + \cdot 173y = \cdot 173 + z + \cdot 173 \times 866z,$$

Whence $z = 1 \cdot 16$, $y = 1 \cdot 005$ or $yi = \cdot 174$.

That is, the whole $w = 1 \cdot 508$ is made up of (at cut off) indicated 0·173, condensed 0·174, water already there 1·16. **A very striking sort of result.**

217. EXERCISE. Given v_1, the volume in cubic feet of steam at the end of admission, the indicated steam is $i_1 = \frac{v_1}{u_1}$ lb. Suppose x lb. (we called it yi in the last exercise) to have condensed during admission, its latent heat l_1x has been given to z lb. already in the cylinder to heat it from t_2 to t_1, so that

$$z(t_1 - t_2) = l_1x \quad \ldots \ldots \ldots \ldots \ldots \ldots \quad (1)$$

Let p_2 and v_2 be the pressure and volume at any other part of the expansion curve, i_2 being the weight of indicated steam there; if we assume that the metal of the cylinder is perfectly non-conducting, we can calculate x and z.

Let the entropy of 1 lb. of water be ϕ, and let $i_1 + x + z = w$.

Then

$$\frac{w}{i_1} = \frac{gG''}{gG'} \text{ and } \frac{w}{i_2} = \frac{fF''}{fF'}$$

and we find that letting a be l/t

$$w = \frac{a_2i_2 - a_1i_1}{\phi_1 - \phi_2} = i_1 + x + z \quad \ldots \ldots \ldots \quad (2)$$

(1) and (2) are equations connecting x and z; we find the unknowns to be

$$z = \left(\frac{a_2i_2 - a_1i_1}{\phi_1 - \phi_2} - i_1\right) \div \left\{1 + \frac{1}{a}\left(1 - \frac{t_2}{t_1}\right)\right\}$$

and

$$x = z\left(1 - \frac{t_2}{t_1}\right) \div a_1.$$

Let us take the following examples.

In every case $p_1 = 101 \cdot 9$, $\theta_1 = 165°$ C., $p_2 = 52 \cdot 52$, $\theta_2 = 140°$ C.

Also let the indicated quantity of steam be such that $v_1 = 1$ cubic foot (or, as $u_1 = 4 \cdot 302$, $i_1 = \cdot 232$). I find that if we let $v_2 = 2v_1(1 - \beta)$ the work is simplified. I get the following results when expansion is according to the law pv^k constant.

k.	z.	x.	w.
0·8	1·0760	·2195	1·5275
0·9	0·6391	·1303	1·0014
1·0	0·3225	·0658	·6203
1·1	0·0792	·0162	·3274
1·2	- 0·1124	- ·0229	
1·3	- 0·2696	- ·0550	

For values of k greater than 1·130, as, indeed, we know by the table, Art. 211, we see that there can be no adiabatic for steam of the shape pv^k constant.

EXERCISE.

Mr. Willans took $pv^{7/6}$ = a constant, as the law of adiabatic expansion. If any such law as pv^k constant, holds between two points in an adiabatic expansion curve, p_1 and p_2, find how much water must have been present at the beginning of the expansion, and how much at p_2.

Answer. Take v to be the volume of the steam only, neglecting the volume of the water. Then $v_1 = u_1 x_1$ if there are x_1 lb. of steam in 1 lb. of the stuff and $v_2 = u_2 x_2$. If ϕ_1 is the entropy of 1 lb. of water at θ_1° F., the entropy of the stuff we deal with is

$$\phi_1 + \frac{l_1}{t_1}\frac{v_1}{u_1} = \phi_2 + \frac{l_2}{t_2}\frac{v_2}{u_2} \quad \ldots\ldots\ldots\ldots\ldots\ldots \quad (1)$$

$$\text{also } p_1 v_1^k = p_2 v_2^k \quad \ldots\ldots\ldots\ldots\ldots\ldots \quad (2)$$

And u_1 and u_2 are known as p_1 and p_2 are known, so that (1) and (2) enable the two unknowns v_1 and v_2 to be calculated. Thus from (2) we have

$$v_2 = v_1 \left(\frac{p_1}{p_2}\right)^{1/k}$$

and hence from (1), since $\frac{v_1}{u_1} = x_1$

$$x_1 = (\phi_1 - \phi_2) \div \left\{\frac{l_2}{t_2}\left(\frac{p_1}{p_2}\right)^{1/k}\frac{u_1}{u_2} - \frac{l_1}{t_1}\right\}$$

Similarly,

$$x_2 = (\phi_1 - \phi_2) \div \left\{\frac{l_2}{t_2} - \frac{l_1}{t_1}\left(\frac{p_2}{p_1}\right)^{1/k}\frac{u_2}{u_1}\right\}$$

Thus taking the Willans $pv^{7/6}$ constant as an adiabatic, if $p_1 = 100$, $p_2 = 50$, then it is found that $x_1 = 1{\cdot}22$, and $x_2 = 1{\cdot}15$. That is, it is impossible for $pv^{7/6}$ to be an adiabatic for saturated steam, since x_1 and x_2 are greater than unity.

Again no such law for the adiabatic can hold in superheated steam. Taking the ratio of the specific heats to be 1·3 (the usual assumption) $pv^{1\cdot3}$ constant, is the adiabatic. The table Art. 211, confirms this conclusion concerning the Willans' assumption.

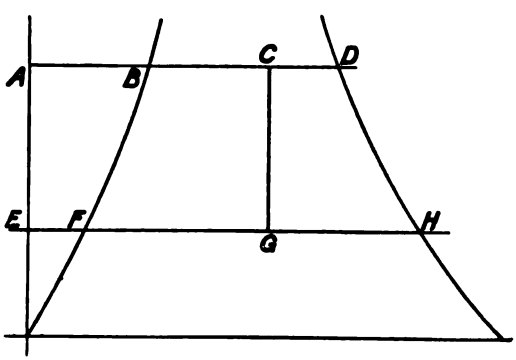

FIG. 230.

218. Flow of Saturated Steam. In Art. 387 it is shown that if steam at rest at θ_1, whose state is x_1 lb. of steam to $1-x_1$ lb. of water, flows adiabatically to a place where the temperature is θ_2 and the state is x_2 and the velocity V feet per second, and if we neglect gravity, we can find V and x_2 by the $\theta\phi$ diagram.

Let AD and EH correspond to the two temperatures.

Make $BC/BD = x_1$. Draw the adiabatic CG.

Then $FG/FH = x_2$. One of our answers.

Convert the area $BCGF$ into foot-pounds, multiply by 64·4, and extract the square root and we find V.

EXERCISE. Steam with 10 per cent. of moisture, at 100 lbs. per square inch, escapes adiabatically to a place where the pressure is 16 lbs. per square inch, find the wetness and the velocity.

Answer. 21·5 per cent. wet; $V = 2{,}430$ feet per second. It will be seen in Art. 391 that this answer is misleading.

How much of this steam (pounds per second) will pass through

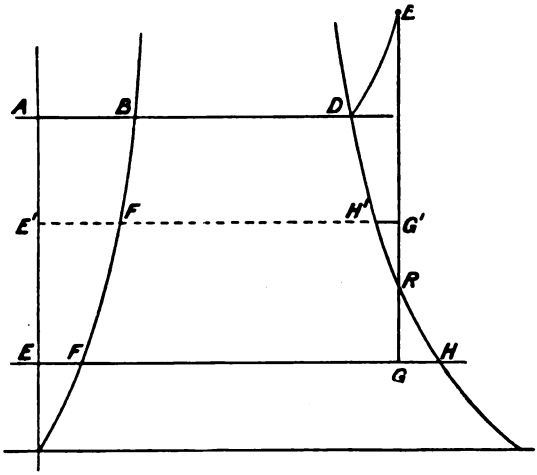

FIG. 231.

an orifice if the cross section of the jet where the stream lines in it are nearly parallel just outside the orifice is 1 square inch ?

219. Flow of Superheated Steam. In Art. 387 it is shown that if superheated steam at rest at θ_1° C. and pressure p_1 flows adiabatically to a place where the temperature is θ_2° C., and if we may neglect gravity, we can find the velocity V and the state of the steam. Let E, Fig. 231 show the state of 1 lb. of the superheated steam at θ_1° C. and pressure p. Draw the adiabatic ERG, the lower temperature being at EH. Then $FG/FH = x_2$ the dryness at the lower temperature.

Convert the area $BDERGFB$ into foot-pounds, multiply by 64·4 and extract the square root, this gives V. If the stuff remains superheated at the lower temperature as E^1G^1, we treat the area $BDEG^1H^1F^1B$ in the same way.

CHAPTER XXIV.

CYLINDER CONDENSATION.

220. WATT'S great improvement of the Newcomen engine consisted in **keeping the cylinder warm**; not condensing the steam in the cylinder itself, but using a separate condenser. Even now, however, a cylinder is heated up by the condensation of the entering steam, and the condensed water boils away during the exhaust. A cylinder is alternately a condenser and a boiler. If we could make its material absolutely non-conducting and keep it perfectly drained of water, we should get rid of this prejudicial action. Unfortunately, an amount of water, which forms only an exceedingly thin skin, may have sufficient capacity to produce great evil effects, and **non-conductivity of metal would then be an evil** (see Art. 399). It is my belief, based on a good deal of practical knowledge of conductivity of heat, that if the metal of a cylinder were quite dry, when fresh steam is admitted, the surface resistance to the passage of heat would be so great that almost no evil effects would be produced at the speeds usual in steam engines.

Probably, what would diminish it more than anything else would be the admixture with the steam of a small quantity of air (easily done on locomotives at the ordinary injector) or an injection of flaming gas, or some vapour less readily condensed than steam, or the use of the same cylinder as a steam and a gas engine in alternate strokes.

I am informed that some careful experiments made in America showed no great increase of economy due to the admission of air. I have been too busy to study the method of experimenting employed, and my attitude towards other people's experiments is that of Mrs. Bormalack on soup.

It was Mr. Clark who first drew attention to the missing water in cylinders, and the evil effects of too early a cut-off, but he states

that the common engine-drivers were perfectly well aware of the phenomenon before he knew it. Mr. Isherwood showed that the missing water increased in proportion to the square root of r.

221. Every test yet made of the **effect of superheating** shows that it leads to greatly increased economy. From 12 to 20 per cent. increase is not uncommon when the superheating has only been about 40 to 100 degrees Fahrenheit.

A compound Corliss gear mill engine, with steam jacketed cylinder, gave on careful trials the following results:—

	I. Indicated power.	W. lb. of steam per hour.	$\frac{W}{I}$
Using saturated steam at 96 lbs. per sq. in .	475	9380	19·75
Using superheated steam at 99 lbs. per sq. in. superheated 118° Fahrenheit	491	7675	15·63
Using superheated steam at 94 lbs. per sq. in. superheated 127° Fahrenheit	502	7835	15·61

Quite recently in the Schmidt compound condensing engine, of 75 indicated horse-power, only $10\frac{1}{2}$ lbs. of steam was used per hour per indicated horse-power. The steam was of 170 lbs. pressure, and was superheated 300° Fahrenheit. An engine must be specially arranged for the use of such high temperature steam.

When condensation is exceptionally bad, the increase of economy due to the use of superheating is exceptionally marked. Mr. Ripper, in his tests of a small non-condensing one-expansion Schmidt engine (Proc. Inst. C.E., Vol. 128, of 1897), found a consumption of 38 lbs., of steam per horse-power hour, reduced to 17 by 300 degrees of superheating. The extra heat required is inconsiderable when we compare it with the advantage derived from superheating.

222. The effect of a steam jacket is to cause a flow of heat into the cylinder which continually tends to diminish the amount of water present, not only in the cylinder but about the valves. In every case when an engine is tried without and with the jacket it is found that a small expenditure of steam in the jacket causes a great diminution of the missing water. In the Report of the Committee of the Institution of Mechanical Engineers, although the jacket feed was usually from 7 to 12 per cent. of the whole of the steam used by the engine, yet, on the whole, there was 9 to 25 per cent. diminution

of steam per horse-power hour. The increased economy is most noticeable in engines which are very uneconomical without the jacket.

Professor O. Reynolds found in his engine, using three expansions, that without jackets, the missing water in his intermediate and low pressure cylinders was $\frac{2}{3}$ of the indicated water, whereas, when they, as well as the high pressure cylinder, were jacketed with the full boiler pressure, the initial condensation in the intermediate cylinder was only about 20 per cent. of the indicated steam, and there was, practically, no condensation in the low pressure cylinder.

The following experimental Results must also be studied :—

EFFECTS OF JACKETS IN CONDENSING ENGINES.

Description.	Indicated horse-power.	Boiler pressure.	Piston speed.	Steam per indicated horse-power hour.	Coal per indicated horse-power hour.	Ratio or Steam per horse-power hour, perfect steam engine.	Simple, s. Compound, c. Triple, t.	
Horizontal	41·1	75	412	32·14	3·53	9·35	s	No jacket.
	38·0		373	26·69	2·94		s	Jacket.
Corliss	146	75	551	22·57	2·51 [1]	9·38	s	No jacket.
	159		548	19·80	2·20 [1]	9·31	s	Jacket.
Corliss	508	75	520	19·77	2·19 [1]	9·34	s	No jacket.
	488		521	19·27	2·14 [1]		s	Jacket.
Beam pumping	65·8	77	176	23·84	2·65 [1]	9·65	c	No jackets.
	81·2		221	19·41	2·16 [1]		c	Jackets.
Beam pumping	162	64	200	18·2	2·02 [1]	9·71	c	No jackets.
	168		212	16·6	1·85 [1]		c	Jackets.
Inverted pumping	140	145	138	17·22	1·91 [1]	8·12	t	No jackets.
	138		137	15·45	1·72 [1]		t	Jackets.
	EFFECTS OF SUPERHEATING ON CONDENSING ENGINES.							
Beam	136	66	335	21·5	2·39 [1]	9·66	s	Saturated.
	107	71	335	19·41	2·16 [1]	9·50	s	Superheated.
	99·5		335	19·25	2·14 [1]		s	Saturated.
	113		335	16·16	1·79 [1]		s	Superheated.
Horizontal	475	111	471	19·75	3·15	8·58	c	Saturated.
	496		474	15·62	2·55		c	Superheated.

[1] These numbers for coal were not measured ; they are calculated at the rate of 9 lbs. of steam per pound of coal.

The good effect produced by a jacket gives proof that—in spite of what is almost universally stated by men who have studied this subject—a cylinder, even when jacketed, and even when there is considerable superheating of the steam before it enters, is not free from water when admission occurs.

223. The good effects due to drainage, or easy escape of water, are not sufficiently thought about. In my opinion it is to this easy drainage that the Willans' engine owes its superiority.

If a pound of steam entering at θ_1° C. drains away at the exhaust temperature θ_3° C., it has given to the cylinder the heat

$$606{\cdot}5 + {\cdot}305\ \theta_1 - \theta_3$$

If a pound of steam entering at θ_1° C. condenses, and if it evaporates and leaves the cylinder as steam at θ_3° C., it has given to the cylinder the heat

$${\cdot}305\ (\theta_1 - \theta_3)$$

For example, let $\theta_1 = 165°$ C., $\theta_3 = 60°$; in the first case, the heat is 597 units; in the second case, it is 33 units.

We see by this crude calculation that in a condensing engine, water that drains away mechanically gives about 20 times as much heat to the cylinder as if it were condensed on admission and re-evaporated in exhaust.

I am even disposed to believe that steam used in a steam jacket is not much more efficient than, even if it is so efficient as, steam allowed to condense and drain away from a well-lagged cylinder.

224. In a steam engine cylinder there is a condition of things which **may almost be called instability.**

It may almost be seen from the above figures how enormous condensation and evaporation may go on, doing great evil, for the purpose of supplying an amount of heat which a twentieth or a thirtieth of the amount of condensation would supply if there was drainage or a steam-jacket. I have heard of an agent who bought a hundred thousand pounds' worth of utterly unnecessary supplies for an army, which he knew would be wasted, because he had a perquisite of 5 per cent.; I have known of an admiral wasting eight days' coal of a fleet to prevent a two days' delay in the reception of a few private letters. Charles Lamb tells us how the first discoverer of the gastronomical value of roast pork burnt down a house every time he wanted a roast. These are not unfair illustrations of the economical conditions under which the cylinder of an ordinary engine is kept fairly dry.

225. Benefit of Successive Expansion. We find that the

percentage of the total steam condensed increases if we cut off earlier in the stroke; possibly it is not that there is more steam actually condensed per stroke, but that it is in a greater ratio to what is indicated. Now it is evident from Art. 214 and elsewhere that we get more economy by using high pressure steam and great expansion, and as great expansion in one cylinder leads to great condensation, we **use two or three cylinders,** Fig. 65. To cut off at $\frac{1}{8}$th of the stroke in a single cylinder is not very different from cutting off at half stroke in three successive cylinders. It makes a more complicated looking engine, but there are these great advantages:—

1. We are able to use a very simple kind of valve gear.

2. The loss by clearance is small.

3. There is a possibility of balancing the forces acting on the frame of the engine and ground; a possibility of obtaining more uniform turning moment on the crank shaft.

4. The range of temperature in each cylinder is only a third of what it is in a single cylinder. It is found that steam condensed in the high pressure cylinder is more or less completely evaporated before admission to the second.

5. The intermediate and low pressure cylinders may be [and always ought to be] jacketed with high pressure steam, so that in these there need be hardly any condensation.

6. There is less than one-third of the leakage past valves and pistons (see Art. 232).

7. Considerations such as (3) show that much higher speeds may be used.

8. In a great number of cases, the machines to be driven run at high speeds; the high speed of the engine allows of direct coupling and so there is much less loss of energy by friction and much greater convenience because of the smaller space occupied.

9. The cost of engines for the same power and economy is less.

There is a disadvantage due to drop of pressure after release in each cylinder, but in truth this is about counterbalanced by the drying of the steam which it produces. With more superheating, or better jacketing or drainage, these drops may be reduced with advantage.

As to the condensation being less when the expansion occurs in two or three cylinders instead of one, this has been proved by many careful tests. Thus Professor Unwin found that when a two-cylinder engine was driven, and afterwards its larger cylinder alone was

used with the same total expansion, he obtained the following results :—

EFFECTS OF JACKETS AND SUCCESSIVE EXPANSION.

	$W \div I$ Without steam in jackets.	$W \div I$ With steam in jackets.	Consumption of steam in jacket as a fraction of the whole.
			per cent.
Single	32·1	26·7	7
Compound . . .	22·1	19·5	12

Single cylinder engines are used when the initial pressure is not much more than 80 lbs. (condensing) or 90 lbs. (non-condensing). Two-expansion engines are used up to initial pressures of about 130 lbs. per square inch. Three-expansion engines are used for higher pressures. There are no exact rules. The use of four-valve gears such as the Corliss, allows us to have economy with more expansion at considerably higher pressures than when the slide valve is used.

226. We find always that **increased speed** means increased economy, and this seems to be altogether due to the fact that at higher speeds there is less missing water per stroke.

The following figures from the non-condensing trials of Mr. Willans illustrate the effect of speed, and also of compounding and tripling on the same engine. y means the ratio of the missing steam at the cut-off in the cylinder of highest pressure to the indicated steam; W is the total weight of steam used in pounds per hour, and I is the indicated horse-power, n being the revolutions per minute, r the total ratio of expansion.

EFFECTS OF SUCCESSIVE EXPANSION AND SPEED.

	n	r	p_1	y	W/I
Simple	400	4·6	106	·420	26
Compound . . .	400	4·9	109	·128	21·4
Triple	400	6·0	152	·056	19·7
Simple	138	4·32	109	·802	31·22
Compound . . .	124	4·36	110	·337	24·73

I find that as a rule in wet cylinders the condensation is halved when the speed is quadrupled, whereas in fairly dry cylinders, well-jacketed and drained, the condensation is halved when the speed is doubled. I mean that there is a tendency to some such difference

of law, but the following results show that there is no very exact law.

WILLANS' CONDENSING COMPOUND. EFFECTS OF SPEED.

p_1	n	r	y	W/I
90	401	4·8	·098	17·3
	301		·139	17·6
	198		·218	18·9
	116		·264	20·0

227. The state of things inside a steam engine cylinder so nearly approaches instability that the student must be specially careful in adopting off-hand assumptions which may seem reasonable. For example, such a calculation as that of Art. 223, where I glibly speak of the heat given to the cylinder by steam condensing at the initial pressure, and evaporating at the exhaust pressure, is misleading, although it happens not to be utterly wrong, as so many reasonable looking assumptions are, which one finds in books and quasi-scientific papers. The neglected part of that calculation is what occurs at intermediate temperatures, and particularly in the expansion (see Art. 400).

It is really necessary to take up **one or two problems which can be worked out accurately mathematically**, and use the answers merely as suggestions in our study of the cylinder.

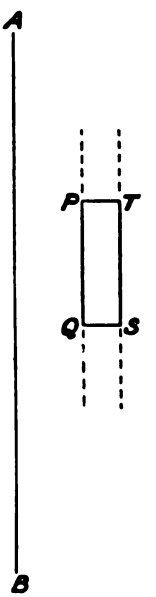

FIG. 232.

If an infinite block of material, supposed to be homogeneous, has a plane face, $A\,B$. If at the point P, which is at the distance x from $A\,B$, the temperature is v, and we imagine the temperature the same at all points in the same plane as P parallel to $A\,B$ (that is, we are only considering flow of heat in a direction at right angles to the plane $A\,B$), and if $\frac{dv}{dx}$ is the temperature gradient at P, then $-k\frac{dv}{dx}$ is the amount flowing per second through unit area like $P\,Q$, in the direction of increasing x. This is really the definition of k, the conductivity of a material. I shall imagine k to be constant. Let us imagine $P\,Q$ exactly a square centimetre in area. Now what is the flow across $T\,S$, or what is the value of $-k\frac{dv}{dx}$ at the new place, which is $x + \delta x$ from the plane

AB? Observe that $-k\frac{dv}{dx}$ is a function of x, call it $f(x)$ for a moment; then the space $PQTS$ receives heat $f(x)$ per second, and gives out $f(x + \delta x)$. Now

$$f(x + \delta x) - f(x) = dx \cdot \frac{df(x)}{dx}.$$

This equation is, of course, true only when δx is supposed to be smaller and smaller without limit. We see then that $-\delta x \frac{d}{dx} f(x)$ is the heat being *added* to the space $P\,Q\,T\,S$ every second; this is

$$-\delta x \frac{d}{dx}\left(-k \cdot \frac{dv}{dx}\right), \text{ or } k \cdot \delta x \cdot \frac{d^2v}{dx^2}$$

But the volume is $1 \times \delta x$, and if ρ is the weight per cubic centimetre, and if s is the specific heat, then if t is time in seconds, $\rho \cdot dx \cdot s \cdot \frac{dv}{dt}$ also measures the rate per second at which the space receives heat. Hence

$$k \cdot \delta x \cdot \frac{d^2v}{dx^2} = \rho \cdot \delta x \cdot s \cdot \frac{dv}{dt}$$

or

$$\frac{d^2v}{dx^2} = \frac{\rho s}{k} \cdot \frac{dv}{dt} \quad \ldots\ldots\ldots\ldots\ldots\ldots \quad (1)$$

It will be found that there are innumerable solutions of this equation, but there is only one which suits particular surface and other given conditions. The beginner ought to take up the following problem—

Imagine the average temperature everywhere to be 0, and that

$$v_0 = a \sin 2\pi nt, \text{ or } a \sin qt \quad \ldots\ldots\ldots\ldots \quad (2)$$

is the law according to which the temperature changes at the skin where x is 0; n or $q/2\pi$ means the number of complete periodic changes per second. I have carefully examined the cycle of temperature change in the clearance space of a steam cylinder, and it follows sufficiently closely a simple harmonic law (see Art. 229) for us to take this as a basis of calculation. Take any periodic law one pleases, it consists of terms like this, and any complicated case is easily studied. Considering the great complexity of the phenomena occurring in a steam cylinder, I think this idea of simple harmonic variation at the surface of the metal to be a good enough hypothesis for our guidance. It is shown in the note that the range $(2a)$ of temperature of the actual skin is much less than that of the steam, being the range in the steam multiplied by e, the emissivity at the surface, and divided by $\sqrt{2\pi nwsk}$. I am not now considering the water in the cylinder, on the skin and in pockets, as requiring itself to be heated and cooled; this heating and cooling occurs with enormous rapidity, and is probably nearly independent of the speed of the engine. Drainage will get rid of much of this water, and drainage has another advantage so great that I am inclined to think drainage much more important than steam-jacketing. But besides this evil function of the water, the layer on the skin acts as greatly increasing e, and so causing the range $(2a)$ to be greater.

The student ought to try if the equation (1) has a solution like

$$v = Ae^{\alpha x} \sin. (qt + \gamma x),$$

and if so, find α and γ, and make it fit the case in which $v = 0$ when $x = \infty$, and $v = a \sin. qt$ where $x = 0$. By actual trial we find that

$$v = Ae^{\alpha x} \sin. (qt + \alpha x) + Be^{-\alpha x} \sin. (qt - \alpha x) \ldots \quad (3)$$

Where A and B are any constants, and $a = \sqrt{\frac{\pi n \rho s}{k}}$ if $q = 2\pi n$. Now if $v = 0$ when $x = \infty$, obviously A is 0. If $v = a \sin. qt$ where $x = 0$, obviously B is a, and hence at any place and at any time

$$v = ae^{-ax} \sin. (2\pi nt - ax) \quad \ldots \quad (4)^1$$

This is the answer for an infinite mass of material with one plane face. It is approximately true in the wall of a thick cylinder, if the outside is at the temperature 0. If the outside is, with very little fluctuation, at an average temperature v', and the thickness of the metal is b, and if the inside skin has the average temperature v'' (in our case 0), we have only to add the terms $v'' + \frac{v' - v''}{b} x$ (in our case $0 + \frac{v'}{b} x$) to the expression (4). This shows how a steam-jacket affects v. If v' is made negative, we have an approximate representation of what occurs in a well-lagged unjacketed cylinder.

The result ought to be very carefully studied. Take for example $a = 10°$ C., $v' = 50°$ C., $b = 3$ centimetres, $k = \cdot 16$, as it probably is in cast iron, although even in iron we do not know k within 50 per cent. Take $n = 2$ which corresponds to 120 revolutions per minute; for any particular value of t find v for various values of x, and show your answers by a curve. Now take other values of t and repeat, and show all the curves in different colours on one sheet of paper. I advise a curve for each of the following values of t—0, 0·1, 0·2, 0·3, 0·4, 0·5. I might waste ten pages of this book on an interesting study of these

---

[1] The emissivity at the metal surface is e, which means that

$$(v_0 - \theta) e = k \frac{dv}{dx} \text{ where } x = 0 \quad \ldots \quad (1)$$

if θ is the temperature of the steam at any instant, and v_0 that of the metal at the surface. The thickness of metal b is supposed to be so great that there are no fluctuations of temperature where $x = b$. It is easy to show that the temperature at any point in the metal is

$$v = \theta_0 + \frac{kv'}{eb + k} + x \frac{v'e}{eb + k} + ae^{-ax} \sin. (2\pi nt - ax) \quad \ldots \quad (2)$$

if

$$\theta = \theta_0 + \frac{ak a}{e} \left\{ \left(1 + \frac{e}{ka}\right) \sin. 2\pi nt + \cos. 2\pi nt \right\} \quad \ldots \quad (3)$$

Of course θ may also be written

$$\theta = \theta_0 + \frac{a}{e} \sqrt{\{(ka + e)^2 + k^2 a^2\}} \sin. \left(2\pi nt + \tan.^{-1} \frac{ka}{ka + e}\right)$$

We see that the effect of the steam-jacket keeping the outer surface of the metal at a temperature which is higher than θ_0 by the amount v' is to raise the average temperature of the inner surface by $kv'/(eb + k)$ above that of the steam. As the surface resistance gets greater and greater (e less and less) the mean inner surface temperature gets to be nearer and nearer that of the outer surface of the metal.

If the amplitude of the steam temperature is called A (this is called $\frac{1}{2}(\theta_1 - \theta_3)$ elsewhere), the amplitude a of the inner surface of the metal is, since $ka = \sqrt{\pi n \rho s k}$

$$a = \frac{Ae}{\sqrt{\pi n \rho s k + (e + \sqrt{\pi n \rho s k})^2}}$$

If e is small $a \propto Ae/\sqrt{n}$

If e is large $a = A$.

curves, but the student will get more good from his own study of them than by reading.

At any point at the depth x there is a simple harmonic rise and fall in the time of one revolution of the engine; but the range gets less *rapidly* as the depth is greater; note also that the changes lag more as we go deeper. This is exactly the sort of thing observed in the buried thermometers at Craigleith Quarry, Edinburgh. The changes of temperature were of twenty-four hours' period, noticeable only at shallow depths, and also of one year period, noticeable at considerable depths. I give the yearly periodic changes, the average results of eighteen years' observations.

Depth below surface.	Yearly range of temperature (Fahrenheit).	Time of highest temperature.
3 feet	16·14	August 14
6 ,,	12·30	,, 26
12 ,,	8·43	September 17
24 ,,	3·67	November 7

Observations at twenty-four feet below the surface at Calton Hill, Edinburgh, showed highest temperature on January 6th.

Now let us from (4) find the rate per second at which heat is flowing through a square centimetre, that is, find $-k\frac{dv}{dx}$ at any instant, where $x = 0$, using a for $\sqrt{\pi n\rho s/k}$. I find it to be

$$kaa\sqrt{2}\sin.\left(2\pi nt + \frac{\pi}{4}\right).$$

The note gives the true form of the steam-jacket term, e being the emissivity at the surface. The steam-jacket sends in heat at the rate $kev'/(eb + k)$ per second. The amount flowing into the metal then during the half period $\frac{1}{2}T$ (or $\frac{1}{2n}$ if n is the frequency or number of periods per second) is the integral of the rate, or

$$a\sqrt{2k\rho s/n\pi} \cdot kev'/2n(eb + k)$$

and the amount *out* of the metal is the same except that the jacket term is positive.

When e is small, the note tells us that a is

$$\frac{1}{2}(\theta_1 - \theta_3)e/\sqrt{2\pi n\rho sk}$$

so that the maximum amount of heat flowing into the metal in one cycle is

$$\frac{(\theta_1 - \theta_3)e}{2n\pi} - \frac{v'}{2nk}.$$

Again, when e is very large, a is $\frac{1}{2}(\theta_1 - \theta_3)$, and the maximum amount of heat flowing into the metal in one cycle is

$$\frac{1}{2}(\theta_1 - \theta_3)\sqrt{2k\rho s}/\sqrt{n\pi} - kv'/2nb.$$

It will be seen that I shall make use of the steam-jacket term when I speak of the causes, Art. 402, tending to keep the cylinder dry of water. The small

continuous flow of heat due to the jacket is very important in this way; but as I shall speak now of the great flow of heat into the metal on admission, this heat coming out again during release and exhaust, I shall neglect the much smaller steam-jacket term in this connection. In a very dry cylinder the steam-jacket term would, however, be important even here.

228. Until last year I and others have always assumed that the **range of temperature** of the metal is something approaching half that of the steam; in fact, that e is so large as to lead to the law

$$\text{Heat flow per cycle} \propto 1/\sqrt{n}.$$

I cannot now find the reference, but I am sure that I have seen evidence that the range of temperature in the skin of the metal was about half that of the steam.

The experiments of Professor Callendar have changed my opinion. For example, he found at 0·01 inch depth a range of 4° when the steam range was about 46° at 100 revolutions per minute. He calculated from k and s for iron that the surface range could only have been about 5°. Now I am not sure that I can accept his measurement of the real temperature at the depth 0·01 inch; there is much to be said in opposition to his view, but in deference to his judgment I have altered my notion of the usual value of e. If e is small, the heat entering the metal per cycle is proportional to n^{-1}. If e is large, the heat is proportional to $n^{-\frac{1}{2}}$. I have often used $n^{-2/3}$ and other powers of n in obtaining empirical formulæ from experimental results. I am now disposed to say that in general I shall assume the heat entering the metal per cycle to be inversely proportional to $\sqrt{n} + cn$, where the n term is more important in dry cylinders and the $\sqrt{n}$ term in wet cylinders. An examination of the results of actual trials of engines, Art. 234, will show that this is reasonable.

229. In the above investigation I have taken a simple harmonic change of temperature of the steam. I once sketched out at random a possible indicator diagram for a non-condensing engine with cut off at about half stroke, and one of my students found that the temperature of the steam followed the law

$$\theta = 126{\cdot}3 + 32{\cdot}3 \sin. (2\pi nt + 20°),$$

t, the time, being measured from dead point, angularity of connecting rod neglected. Usually, of course, it cannot be so simple, but it is evident from the above investigation that the effect of the higher harmonies is small.

My students have taken a variety of hypothetical indicator diagrams, with cushioning, &c.; taking one second as the time of a revolution, they have drawn the curves showing temperature and

time; **they have developed the function in Fourier series,** each term of which is of course treated exactly in the same way as the above. I may say that I have given this exercise to students in successive years rather as a good practical mathematical exercise than as one which it was worth while to do for the sake of the steam engine. In one year I took account of the fact that some portions of the barrel surface have a different experience from the clearance surface, but in truth there is not much benefit derivable from the vague speculative knowledge that we have of the effect of the piston covering the place, the perpetual change in the surface film, the conduction of heat from and to hotter and colder neighbouring places, &c.

Instead of giving the results arrived at so laboriously by my students—results some of which are perhaps incorrectly worked out—I may say that I think the following problem gives a better suggestion.

230. If the infinite block of Art. 227 is all at θ_3, and if suddenly its surface is exposed to steam at θ_1 and kept at that temperature for the time t, the heat that enters it per unit area is $e(\theta_1 - \theta_3)t$ if e and t are small, and it is

$$2(\theta_1 - \theta_3)\sqrt{\frac{s\rho k}{\pi}}\sqrt{t}$$

if e is large.

I have shown in the note[1] that these two cases lead to the following results:—

---

[1] An infinite block of homogeneous material with a plane face, the temperature everywhere being 0 till the time t is 0, when suddenly the medium on the other side of the plane face is kept at constant temperature v_0. Let the surface emissivity be e; let v_1 be the temperature of the skin at time t, and v the temperature at the depth x. Then, as before,

$$\frac{d^2v}{dx^2} = \frac{s\rho}{k}\frac{dv}{dt} = q^2v \quad \ldots\ldots\ldots (1)$$

I use q^2 to represent $\frac{s\rho}{k}\frac{d}{dt}$. Hence

$$v = \epsilon^{-qx}v_1 \quad \ldots\ldots\ldots (2)$$

$$\frac{dv}{dx} = -q\epsilon^{-qx}v_1 = -qv$$

$$kqv_1 = e(v_0 - v_1),$$

$$\text{or } v_1 = \frac{v_0}{1 + \frac{k}{e}q} \quad \ldots\ldots\ldots (3)$$

Developing (3) in powers of q or in inverse powers of q, we get two sets of solutions, one easier to work with when et is small, the other easier to work with when et is large.

Let Q be the amount of heat which enters the block from $t = 0$, then Q is the integral of $e(v_0 - v_1)$. This gives an example of the enormous practical value of Mr. **Heaviside's operator method** which may be easily understood and used by the

The heat entering the metal per unit area during admission may be represented by

$$e(\theta_1 - \theta_3)\left(g + \frac{h}{r}\right) \div n \quad . \quad . \quad . \quad . \quad . \quad . \quad . \quad (1)$$

where g and h are constants if e is small and to

$$(\theta_1 - \theta_3)\left(g + \frac{h}{r}\right) \div \sqrt{n} \quad . \quad . \quad . \quad . \quad . \quad . \quad . \quad (2)$$

if e is large, if r is the ratio of cut-off. Hence as we are only looking for a working formula, I shall take it that during admission from θ_3 to θ_1, cut-off being at $\frac{1}{r}$th of the stroke, the heat that enters the metal per unit area is represented by

$$e\,\frac{g + \frac{h}{r}}{\sqrt{n} + cn} \quad . \quad . \quad . \quad . \quad . \quad . \quad . \quad . \quad . \quad . \quad (3)$$

---

mathematical tyro to solve problems regarded as insoluble by the very best orthodox mathematicians (see Mr. Heaviside's *Electro-magnetic Theory*, Chap. V. § 228). The answers which suit small values of et are

$$v_1 = 2v_0\left(\frac{t}{a\pi}\right)^{1/2}\left\{1 + \frac{2t}{3a} + \frac{1}{3\cdot5}\left(\frac{2t}{a}\right)^2 \quad \frac{1}{3\,.\,5\,.\,7}\left(\frac{2t}{a}\right)^3 + \&c.\right\} + v_0(1 - \epsilon^{t/a}) \quad . \quad . \quad . \quad (4)$$

$$Q = ev_0\left[a(\epsilon^{t/a} - 1) - \frac{2}{(a\pi)^{1/2}}\left\{\frac{2}{3}t^{3/2} + \frac{4}{15}\frac{t^{5/2}}{a} + \frac{8}{7\,.\,15}\frac{t^{7/2}}{a^2} + \frac{16}{9\,.\,3\,.\,5\,.\,7}\frac{t^{9/2}}{a^3} + \&c.\right\}\right] \quad (5)$$

Where $a = spk/e^2$.

When et is small enough we see that

$$v_1 = 2v_0\sqrt{\frac{t}{a\pi}} \text{ and } Q = ev_0t \quad . \quad . \quad . \quad . \quad . \quad . \quad . \quad . \quad . \quad (6)$$

If the motion of the piston is simple harmonic, and there are n revolutions per minute, if admission is exactly at a dead point, if cut-off is at $\frac{1}{r}$th of the stroke, the time of admission t, it is evident that t is proportional to $\frac{1}{n}$ and to $\cos.^{-1}\left(1 - \frac{2}{r}\right)$. Calling this t I have calculated its value and find that it may roughly be represented by the function of r, which I tabulate. It would be well to add a constant to every value of t, because admission may be said roughly to take place in all cases when the piston is, say, ten degrees from the dead point; this will cause no change in the character of the formula which I suggest.

r	t	$20 + 146/r$
16	29	29
12	33·6	32
9	39	36
7	44·4	41
5	53·1	49
3	70·5	69
2	90	92
$\frac{3}{2}$	109·5	117

It would be easy to obtain a simple function of r, which would be in more exact proportion to t, but it is evident that for my purpose even a roughly correct repre-

the n term being more important in dry cylinders and the $\sqrt{n}$ term in wet cylinders where e is presumably large. Also as e ought to come into the formula only when it is small, I shall take it that in this formula, our e increases in proportion to the wetness of the cylinder only when small and reaches a maximum value. In fact, if w is the average weight of water present, and S is the average exposed area of the cylinder surface, I shall consider e to be a function of w like

$$e = \frac{w/S}{1 + mw/S} \quad \ldots\ldots\ldots\ldots \quad (4)$$

Where m is some constant; that is, the heat entering the metal per stroke is

$$\frac{wS}{S + mw} \times \frac{y + \frac{h}{r}}{\sqrt{n} + cn} \quad \ldots\ldots\ldots\ldots \quad (5)$$

If w is the water present at $\theta_3°$ C. before fresh steam is admitted, the loss of heat during admission at $\theta_1°$ C. due to the presence of water is $\rho w(\theta_1 - \theta_3)$.

I take θ_3 (the exhaust temperature) as the temperature of the water, paying no attention to the fact that the pressure rises during cushioning, because I maintain that if there is water present it can only be at very low speeds that there is equilibrium of temperature between steam and water; the steam is locally superheated. My indicator, Fig. 90, has enabled me to get diagrams at more than 1,000 revolutions per minute, and I find that the cushioning curve alters greatly with speed. Cushioning greatly diminishes, in fact, at smaller speeds.

I shall use N to stand for $\sqrt{n} + cn$; I shall use S to mean the average surface of metal exposed to the steam. In any type of engine the clearance area is proportional to the piston area; the rest of the average surface exposed

---

sentation will suffice. I shall therefore take it that when e is small the heat entering the metal per unit area during admission may be represented by

$$e(\theta_1 - \theta_3)\left(y + \frac{h}{r}\right) \div n \quad \ldots\ldots\ldots \quad (7)$$

where y and h are constants.

The solution which suits larger values of e and t is

$$r_1 = r_0\left[1 - \left(\frac{a}{\pi t}\right)^{1/2}\left\{1 - \frac{a}{2t} + 1{\cdot}3\left(\frac{a}{2t}\right)^2 - \&c.\right\}\right] \quad \ldots \quad (8)$$

$$Q = er_0\sqrt{\frac{a}{\pi}}\left(2t^{1/2} + at^{-1/2} - \frac{a^2}{2}t^{-3/2} - \&c.\right) \quad \ldots \quad (9)$$

where as before $a = spk/e^2$.

Using only the first terms in t we find

$$r_1 = -\frac{2}{\sqrt{t}}\frac{r_0}{e}\sqrt{\frac{spk}{\pi}} \quad \ldots\ldots\ldots \quad (10)$$

$$Q = 2r_0\sqrt{\frac{spk}{\pi}}\sqrt{t} \quad \ldots\ldots\ldots \quad (11)$$

Now I find that I get a much more accurate representation of $\sqrt{t}$ than of t by an expression like $y + h/r$, so that the heat entering the metal per unit area during admission may be represented by

$$(\theta_1 - \theta_3)\left(y + \frac{h}{r}\right) \div \sqrt{n} \quad \ldots\ldots\ldots \quad (12)$$

before cut-off may roughly be taken to be some fraction of the cylindric surface exposed at cut-off, and so we may take it that the exposed surface may be expressed as proportional to

$$d^2 + b\frac{dl}{r}$$

where d is diameter, and l length of cylinder, and b is a constant. The missing heat per stroke is then

$$\left(Se^{\frac{y + h/r}{N}} + w\right)(\theta_1 - \theta_3) \quad \ldots\ldots (6)$$

I take it that the amount of steam condensed to provide this heat may be obtained by dividing by $H_1 - \frac{1}{2}(\theta_1 - \theta_3)$.

The indicated steam per stroke is $\frac{1}{4}\pi d^2 l/144 r u_1$, and if y $\frac{\text{condensed steam}}{\text{indicated steam}}$

$$y \propto \left(Se^{\frac{y + h/r}{N}} + w\right)\frac{\theta_1 - \theta_3}{H_1 - \frac{1}{2}(\theta_1 + \theta_3)}\frac{ru_1}{d^2 l} \quad \ldots\ldots (7)$$

Now I find that if $\theta_3 = 40°$ C. in condensing engines, and 110° C. in non-condensing engines, we may take it as roughly true that

$\frac{(\theta_1 - \theta_3)u_1}{H_1 - \frac{1}{2}(\theta_1 + \theta_3)}$ is proportional to $p_1^{-0.6}$ in condensing engines, and is a constant in non-condensing engines. This can easily be checked by a student, and is an **interesting exercise.** Hence

$$y \propto \left(\frac{S}{ld^2}\right)^{\frac{yr + h}{N}} + \frac{wr}{d^2 l}\Big) f \quad \ldots\ldots (8)$$

where f is a constant in non-condensing and is proportional to $p_1^{-0.6}$ in condensing engines.

231. If we choose to imagine that in ordinary well-designed engines there is no water at the end of the exhaust, make $w = o$. As the clearance area is much the most important part of S, we may roughly take $S \div ld^2$ as the reciprocal of the dimensions of the cylinder, and this is perhaps most usually stated as $1/d$; and we have a working formula, assuming e to be constant.

$$y \propto \frac{r + a}{(\sqrt{n} + lm)d} \text{ non-condensing.} \quad \ldots (1)$$

$$y \propto \frac{r + a}{(\sqrt{n} + \beta n)dp_1^{0.6}} \text{ condensing.} \quad \ldots (2)$$

232. Leakage.—Of the steam missing at cut-off, part is what leaks past valves and piston. This leakage is occurring during the whole cycle, and is probably proportional to $p_1 - p_3$. Messrs. Callendar and Nicholson in studying it, apply the laws of transportation of water through narrow passages (steam condensing on one side of the valve, passing through as water and evaporating on the other side). They find that in one balanced slide valve and three unbalanced, examined by them, the leakage in pounds of steam per hour is equal to

$\cdot 02s(p_1 - p_3)/\lambda$, where s is the perimeter of the port and λ is what they call the mean overlap. The leakage per second in their experiments seemed to be nearly independent of the speed of reciprocation of the valve. As to their view of the way in which leakage takes place, they say, "So long as the valve is stationary, the oil film may suffice to make a perfectly tight joint; but as soon as it begins to move, the oil film becomes broken up and partly dissipated. Water is being continually condensed on the colder parts of the surface exposed by the motion of the valve. This water works its way through, and breaks up the oil-film under the combined influence of the pressure and the motion. The continual re-evaporation taking place in the exhaust tends to keep the valve and the bearing surfaces of the seat cool, and to maintain the leaking fluid in the state of water. The exhaust steam from the cylinder has the same tendency. The coefficients of viscosity of steam and water at the temperatures which occur in the steam engine are not accurately known. But whereas that of steam increases with rise of temperature, that of water diminishes very rapidly. It is not improbable that the quantity of water which can leak through a given crack under a given difference of pressure, may be from twenty to fifty times greater than the quantity of steam which can leak under similar conditions. This agrees with well-known facts in regard to leakage, and explains how it is that the leakage in the form of water is so great. A few simple experiments were made with regard to the transpiration of water and steam under the conditions in question, and the leakage in the form of water was more than twenty times as great, the water being at a temperature below boiling point. The motion both of the water and the steam, owing to the high velocity, was certainly turbulent or eddying, which would have the effect of greatly increasing the resistance as compared with that due to viscosity, if the motion were steady. For the case of steady motion, comparative tests were made of the relative values of the viscosity of water cold and hot. The measurements were not sufficiently accurate to give the law of the variation of the viscosity with temperature above 212°; but it appeared that the viscosity at 212° F. was only one quarter of that at 62° F., and that it continued to diminish very rapidly. Under the actual conditions of the valve-leak experiments, the water leak is more likely to have been between forty and fifty times the steam leak. An explanation is thus furnished of a possible form of leakage, indirectly due to condensation and re-evaporation, so many times greater than the steam leakage, which, alone, engineers have been in the habit

of contemplating, that it might well claim attention on its own merits, apart from the very limited number of valves on which it has hitherto been possible to make direct experiments.

"The analysis of a large number of observations, in addition to the few made by the authors, leads to the conclusion that all valves leak more or less when in motion, and that in many cases the greater part of the missing quantity is to be attributed to leakage of this description. Whatever the precise manner in which the leak takes place, it appears to be nearly proportional to the difference of pressure and to be in most cases independent of the speed. In any case it appears probable that the leakage is connected in some way with the condensation taking place on the valve surfaces. If so, it may evidently be greatly reduced, if not entirely cured, by jacketing, or otherwise heating the valve seat, to minimise the condensation.

"These views have an important bearing on the design of valves. For low-speed engines, separate steam- and exhaust-valves should possess advantages over the ordinary slide valve. The superiority of the compound engine would also appear to be partly due to the great reduction of possible leakage."

233. The quantity of water which will pass per second through a capillary passage is proportional to

$$(p_1 - p_3)\frac{a^2}{s\lambda}$$

if a is the cross-sectional area, s the perimeter of the section, and λ the length of the passage.

It is practically impossible to guess at the magnitude of these quantities in **a leaking valve or piston.** Very slight local differences of temperature in valves cause great warping, and we have the effects of wear also to consider in estimating the thickness of the water film between faces and seats of valves. Let us take a as proportional to d^2 and s and λ each proportional to d in similar engines if d is the diameter of the cylinder. This would give us the leakage per stroke $\propto (p_1 - p_3)d^2/n$.

Dividing this by the indicated steam, and assuming roughly that $(p_1 - p_3)u_1$ is constant, we find that the portion of y which is due to leakage is proportional to r/nd.

If, then, I am right in this rough generalisation, (1) of Art. 231 ought to be nearly correct as representing both condensation and leakage in non-condensing engines; whereas, in condensing engines, a term proportional to r/nd ought to be added to (2).

The Missing Quantity—Experimental Results.

234. It has long been known from actual measurement that in a single-cylinder engine, y the ratio of **missing steam** at cut-off to the indicated steam, is greater as r is greater, is greater as the speed is less, and is greater in small cylinders than in large. Until 1888,

however, there was no experimental investigation the methods of which were sufficiently scientific to withstand criticism. Various formulæ were used to express the results, and they were supposed to be based on theories. For twenty years I have been in the habit of using

$$y = a \frac{r + b}{d(\sqrt{n} + cn)} \quad . \quad . \quad . \quad . \quad . \quad (1),$$

where a and b and c are constants which alter with the nature of the engine; r is the ratio of cut-off; d is the diameter of the cylinder in inches. Also a is a constant in non-condensing engines, but varies inversely as the square root of the initial pressure p_1 of the steam in condensing engines.

I have used $\sqrt{n} + cn$ and sometimes $n^{\frac{3}{4}}$ in the denominator, telling my students that I could not understand how the theory (Art. 227), admittedly defective otherwise, could be so wrong as I sometimes found it in this particular. I have already pointed out in Art. 228 in what way my old theory was defective.

Professor Cotterill's formula is

$$y = c \frac{\log. r}{d\sqrt{n}} \quad . \quad . \quad . \quad . \quad . \quad (2),$$

where c is sometimes as little as 40 and sometimes as much as 100, both in condensing and non-condensing tests.

Professor Thurston uses

$$y = \frac{c\sqrt{r}}{d\sqrt{n}} \quad . \quad . \quad . \quad . \quad . \quad (3),$$

where c is 30 in a fairly economical engine.

It is easy to show that however (2) and (3) may be made to agree with tests of non-condensing engines, they cannot be made to agree with the tests of condensing engines. Thus, for example, y i supposed to be the same at a given r and n, whether p_1 is 180 or only 45, whereas in the second case y is usually found to be twice as great as in the first. I do not understand how any one considering the theory of the question can have left out the p_1 term in condensing engines. Messrs. Callendar and Nicholson have recently thrown out the suggestion

$$y = r \left\{ \frac{a}{np_1} + \frac{b}{dn^{\frac{1}{2}}} \right\} \quad . \quad . \quad . \quad (4),$$

which is certainly more promising than the others. I have not tried it yet, except on Willans' compound condensing trials, and these it certainly does not agree with, but of course it is only meant for a single-cylinder engine.

It is evident from the more complete theory of Chap. XXXIV. that **no simple formula** can be expected to agree with good experimental results. The only results which seem to me of scientific value are those published by the late **Mr. Willans** in 1888 and in 1893, in papers read before the Institution of Civil Engineers. Students must refer to these classical papers themselves for descriptions of the central valve engines actually employed, and the study of the results is the best of all exercises.

Non-Condensing Trials, 1888.

235. The engine had three cylinders, areas of pistons 34·5, 71·47, and 141·3 square inches; stroke, 6 inches. I use r to mean the ratio of the greatest volume to which the steam can expand in the engine to the volume of steam of its initial pressure at cut-off. This definition will suit either single, double, or triple expansion engines.

I. *Single Cylinder Trials.*—Piston area, 141·34. The initial pressure p_1 varying from 41 to 109 lbs. per square inch. The ratio of cut-off r in every trial equal to about $p_1 \div 25$, the speed varying from $n = 409$ to $n = 111$ revolutions per minute. I find that y may be taken as being fairly well represented by

$$y = 24 \frac{r}{d\sqrt{n}} \quad . \quad . \quad . \quad . \quad . \quad (1),$$

where d is the diameter in inches, although there are some large discrepancies from the $\sqrt{n}$ law. I assume the law as to d, for this was not tested in any way. In the trials, r and p_1 were not separately varied, so that if we had no guidance from theory we might take y to be equal to p_1, divided by $d\sqrt{n}$.

II. *Compound Trials.*—Cylinders 71·47 and 141·3 square inches in area, y being $\frac{\text{steam missing at high cut-off}}{\text{indicated at high cut-off}}$. These trials were very numerous, and were the most important.

If d is the diameter of the high pressure cylinder, I find that

$$y = 120 \frac{r}{dn} \quad . \quad . \quad . \quad . \quad (2)$$

satisfies all the trials very well.

In these trials of Mr. Willans he kept r always nearly equal to $p_1/25$, varying p_1 and r together, so that the above result may really involve p_1 and may not be so simple as to r. But from the considerations of Art. 230 I am inclined to think that (2) is correct and that y is independent of p_1; nevertheless we have no proof of this.

III. The triple expansion trials were few, only seven altogether. We can only say that $y = 0{\cdot}057$ when $n = 400$ and p_1 is from 152 to 172 lbs. per square inch, r varying from 6 to 6·5. If we take y to be of the same form as in the compound trials, and if d is the diameter of the highest pressure cylinder

$$y = 150 \frac{r}{dn} \quad . \quad . \quad . \quad . \quad (3).$$

In the above statements I have gratuitously assumed that y is inversely proportional to d in similar engines.

Condensing Trials, 1893.

236. The central valve engine used was not very different from that of the non-condensing trials, and is like one of the three shown in Fig. 233, except that these are compound only. When all three cylinders are used, steam enters the first cylinder by the ports AA_1 when the central valve in it moves up and opens A. When the port A is opposite the metallic rings at the end of the cylinder, the steam is cut off; subsequently the central valve closes the port A and places the port A_1 in communication with the receiver beneath the piston by the port A_2; on the return stroke the steam is transferred from the cylinder to the receiver. Thence the steam enters and leaves the second and third cylinders by the ports B_1B_1 and B_2, and other ports C_1C_1 and C_2, not shown in the figure, which is that of a compound engine only. On leaving the low pressure cylinder, the steam is transferred in the same way to the under side of the piston on the up stroke, and on the next down stroke it is allowed to escape into the condenser by the port D. In this way the lowest pressure cylinder, that is, the space above the lowest pressure piston, is never in communication with the condenser.

The central valve is worked by an eccentric on the crank pin. The areas of the pistons in the one-line triple engine tested on their upper or working sides were 22·86, 50·25, 143·33 square inches. Stroke 6 inches. The cylinders are not jacketed in the usual sense, and yet it is obvious that there is a sort of jacketing.

Mr. Willans took it that back pressure and the friction of the engine amounted to 6 lbs. per square inch on his low pressure piston. There is no record of his having measured this.

In his non-condensing trials Mr. Willans had found that for the same cut-off and speed when he used his non-condensing engine as a condensing engine (not very good vacuum) he had about 50 per cent. more missing steam at cut-off in his low pressure cylinder, and it was

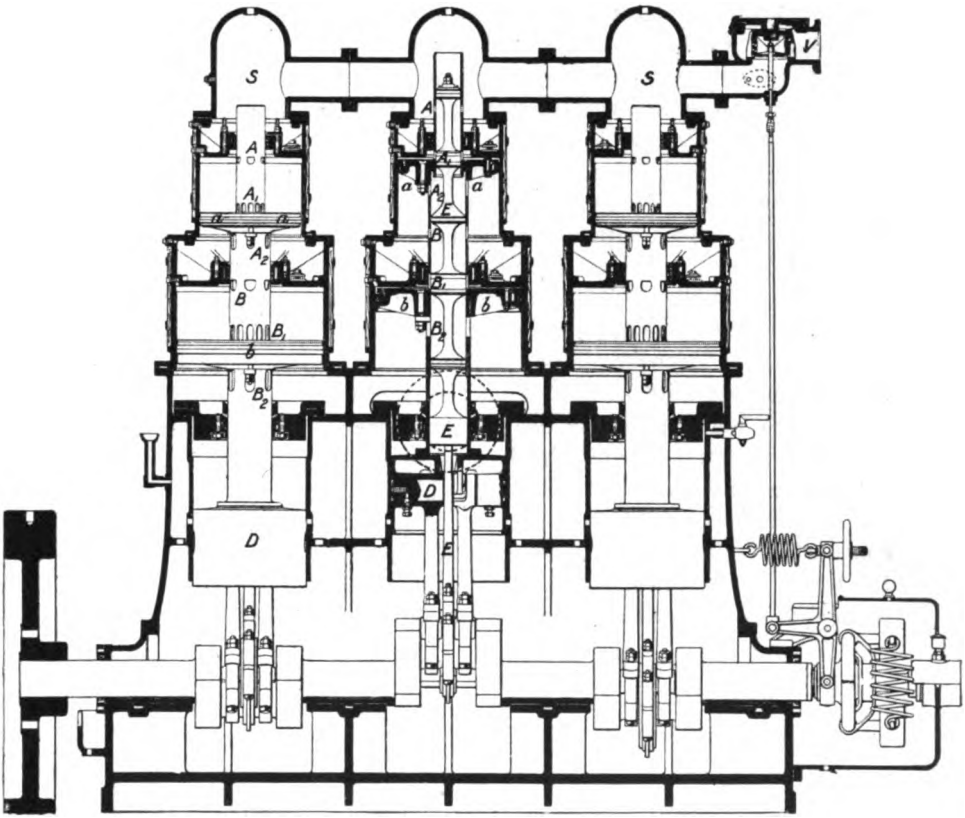

FIG. 233.

Shows a three line Willans compound engine. The double beat throttle valve *V* (regulated by the governor shown on the shaft) admits steam to all three engines at *S S*. *a* the high pressure, and *b* the low pressure, and *D* the guide or air cushion piston are rigidly connected by tubes or a trunk, and work one crank through a divided connecting rod. Inside the trunk are piston valves worked from an eccentric *E* on the crank pin. Steam from *S* enters by openings in the tube at *A* and A_1 into the space above piston *a*, and exhausts from this space into the space below *a*. From this in the same way next stroke it is admitted above piston *b*, and exhausts into the space below *b*, which is the exhaust chamber. The space above *D* is filled with air to serve as a buffer or cushion (Art. 65). The student will do well to make a paper model to see how the piston valves admit, cut off and release, because of their motion relatively to the trunk. The valve rod is always in compression because of the steam pressure above the top piston valve. The piston connections and connecting rods are also always in compression (Art. 65). The Willans' triple engine has another piston between *b* and *D* and corresponding valves.

this that induced him to adopt the plan used by Watt in his Cornish engine of not allowing the space on the working side of the piston to communicate directly with the condenser. He attributes much of the economy of his engines to this method of diminishing the temperature range. I attribute most of it to automatic drainage.

A common error in the measurement of total water supplied to an engine is due to inaccuracy in measuring the water level in the boiler. The engine of Mr. Willans lent itself to great accuracy in measuring the total water, by measuring what left the hot well. He was of opinion that there was never more than $1\frac{1}{2}$ per cent. of water present in the steam supplied, as he used a separator.

The following numbers have been taken from Mr. Willans' paper, *Proc. I. C. E.*, 1893. I have worried over them for years, trying to understand their seeming inconsistencies with one another, sometimes thinking these inconsistencies due to errors of experiment; but after every one of my failures I have felt that some ingenious student will be able to make a better use of them than I have. I give the following for what it is worth; it is not good, but I think that it is better than anything that has been published.

The student ought for each set of tests where r is kept nearly constant, to plot W and I on squared paper, and see if he obtains the linear laws connecting W and I which I give in Art. 148. W is pounds of steam per hour, and I is the indicated horse-power.

WILLANS' SINGLE CYLINDER CONDENSING TRIALS.

p_1	r	n	y	$\frac{y\sqrt{p_1 n}}{r-0{\cdot}7}$	W	I
54·91	2·538	381·5	·192	15·12	811·80	31·63
47·58	2·57	380·9	·205	14·77	686·1	27·24
37·80	2·62	381·0	·267	16·69	583·6	21·87
28·93	2·65	382·1	·310	16·71	465·26	16·11
20·73	2·68	384·9	·326	14·70	345·4	11·50
16·08	2·53	378·2	·305	16·35	266·22	9·06
74·12	4·04	383	·336	16·94	736·5	33·23
64·37	4·04	382	·379	17·79	676·3	28·97
55·19	4·01	379·5	·382	16·69	596	24·80
37·94	4·10	378·3	·488	17·20	440·4	16·81
20·65	4·31	381·6	·645	15·86	259·1	9·18
16·58	4·31	379·8	·632	13·89	206·1	6·87
In the following tests the steam was superheated.						
59·24	2·44	383·7	·190	—	831·9	33·64
40·27	2·58	377·6	·205	—	566·7	23·04
28·80	2·63	384·6	·239	—	447·6	16·95
21·37	2·64	384·0	·182	—	311·32	11·77

We see, therefore, that in the Willans' single cylinder condensing trials we may fairly say that

$$y = 16 \frac{r - 0{\cdot}7}{\sqrt{p_1 n}}$$

or, if the d law is true,

$$y = \frac{217\ (r - 0{\cdot}7)}{d\sqrt{p_1 n}}.$$

Superheating produced no marked improvement at the higher pressures, but there is a marked improvement at the lower pressures.

WILLANS' CONDENSING TABLE II. COMPOUND SERIES.

p_1	r	n	y	W	I	$\frac{W}{I}$	$\frac{y\sqrt{p_1 n}}{r - 2{\cdot}75}$
125·91	5·68	402·16	0·119	671·44	40·14	16·72	9·2
106·71	5·77	405·27	0·118	564·2	33·25	16·97	8·1
81·24	5·62	401·17	0·098	443·22	25·61	17·30	6·2
60·50	5·69	404·44	0·132	336·13	18·69	17·98	7·0
37·16	6·12	398·9	0·130	219·1	10·81	20·27	4·8
127·81	5·74	311·14	0·117	504·69	30·99	16·28	7·8
107·19	5·74	310·99	0·118	433·10	25·69	16·85	7·1
81·03	5·77	301·46	0·139	344·5	19·52	17·64	7·2
59·46	5·72	301·98	0·150	259·5	14·01	18·52	6·7
35·07	5·84	300·06	0·199	167·1	7·61	21·96	6·8
126·14	5·66	203·23	0·136	340·01	19·93	17·06	7·4
84·32	5·89	197·96	0·218	252·06	13·30	18·95	9·0
60·57	5·73	203·0	0·219	188·9	9·42	20·05	8·1
35·25	6·23	196·49	0·343	125·36	5·26	23·83	8·2
114·91	5·54	114·6	0·230	178·2	9·04	19·71	9·1
83·44	5·86	116·07	0·264	133·56	6·66	20·05	8·4
39·49	5·87	112·54	0·474	78·3	2·9	27·0	10·1

WILLANS' CONDENSING TABLE III. COMPOUND SERIES.

p_1	r	n	y	W	I	$\frac{W}{I}$	$\frac{y\sqrt{p_1 n}}{r - 2{\cdot}75}$
155·71	11·18	396·7	0·347	492·12	33·19	14·82	10·2
131·25	10·81	399·02	0·294	411·47	27·11	15·18	8·3
110·98	10·55	402·40	0·285	349·73	22·09	15·83	7·7
59·16	12·23	395·56	0·473	212·60	11·66	18·23	7·6
60·41	11·04	394·23	0·397	216·50	11·86	18·25	7·4
137·37	11·14	295·28	0·391	335·84	22·06	15·22	9·4
138·12	10·78	198·6	0·449	243·86	14·76	16·52	9·0
156·86	10·59	118·08	0·527	152·43	8·84	17·23	9·1

WILLANS' CONDENSING TABLE III. COMPOUND SERIES (*continued*).

p_1	r	n	y	W	I	$\frac{W}{I}$	$\frac{y\sqrt{p_1 n}}{r-2{\cdot}75}$
168·07	15·81	402·15	0·446	392·10	27·5	14·26	8·9
132·82	15·82	398·1	0·454	323·48	21·59	14·98	8·0
82·56	17·50	406·7	0·665	227·28	13·18	17·24	8·5
161·31	16·07	303·94	0·567	302·34	19·89	15·20	9·4
86·13	15·74	300·2	0·622	188·60	10·62	17·75	7·8
157·91	16·05	203·26	0·736	226·04	13·46	16·79	9·9
73·43	17·04	198·97	1·063	129·10	6·00	21·52	9·0
172·56	20·18	404·1	0·600	366·07	24·87	14·72	9·1
111·03	20·24	396·02	0·649	249·4	16·03	15·51	7·8

I can make nothing better of the compound trials (condensing) of Mr. Willans than this :—

The last column of the table shows the values of

$$\frac{y\sqrt{np_1}}{r-2{\cdot}75}$$

for all his results except the five trials in which the value of r was about 5·7, $n = 400$ and p_1 varying from 126 to 37, and it is evident that, except for these five trials, we may take

$$y = c\,\frac{r-2{\cdot}75}{\sqrt{np_1}}, \text{ where } c = 8{\cdot}20.$$

A study of the numbers will show that there can be no simple formula which is very satisfactory.

237. I. As to the effect of **the initial pressure**, it is evident that when

$r = 5{\cdot}7$, $n = 400$, y slightly increases as p_1 is less
$r = 5{\cdot}7$, $n = 300$, $y \propto p_1^{-\frac{1}{2}}$
$r = 5{\cdot}7$, $n = 200$, $y \propto p_1^{-\frac{1}{2}}$
$r = 5{\cdot}7$, $n = 114$, $y \propto p_1^{-\frac{1}{2}}$

$r = 11$, $n = 400$, y increases as p_1 is less
$r = 16\frac{1}{4}$, $n = 400$, $y \propto p_1^{-\frac{1}{2}}$
$r = 16\frac{1}{4}$, $n = 300$, y increases as p_1 is less
$r = 16\frac{1}{4}$, $n = 200$, $y \propto p_1^{-\frac{1}{2}}$
$r = 20$, $n = 400$, y increases as p_1 is less.

It is, however, only where $r = 5{\cdot}7$, $n = 400$ that we are perfectly certain that y is not greatly affected by the value of p_1, and, indeed, that we may not take it that $y \propto p_1^{-\frac{1}{4}}$.

II. **As to speed.** When $r = 5{\cdot}7$, it is only at the medium pressures, say $p_1 = 60$ to $p_1 = 107$, that we find

$$\begin{aligned} &y \propto n^{-\frac{1}{4}} \\ \text{at } p_1 = 36,\ &y \propto n^{-1} \\ \text{at } p_1 = 126,\ &y \propto n^{-\frac{1}{4}}. \end{aligned}$$

The trials for other values of r do not show such large discrepancies from the rule we have given.

I have not quoted any of the numerous other figures of Mr. Willans, but it is to be understood that he tries to trace the amount of steam present at every stage in his compound and triple trials. I find that the following rule is fairly typical. We have seen that the water missing in the high pressure cylinder when r was about 5·7 follows a rather complicated law.

Now if y_1 is $\dfrac{\text{missing steam in low pressure cylinder}}{\text{indicated steam in low pressure cylinder}}$, I find the simple rule

$$y_1 = \frac{123}{n + 74}.$$

Certainly the inverse $\sqrt{n}$ law cannot be made to hold.

Willans' Triple Condensing Trials.

238. In the following trials there is not much variation of r and n. The rule

$$y = 110\,\frac{r - 7}{n\sqrt{p_1}}$$

will be found to be fairly correct; or assuming the untested law for d, if d is the diameter of the highest pressure cylinder in inches

$$y = \frac{600\,(r - 7)}{dn\sqrt{p_1}}.$$

The most important thing to notice is that

$$\begin{aligned} &\text{when } r = 21{\cdot}5, \text{ and } n = 377,\ y \propto p_1^{-\frac{1}{4}} \\ &\text{when } r = 14{\cdot}2 \text{ and } n = 301,\ y \propto p_1^{-\frac{1}{4}} \\ &\text{when } r = 14{\cdot}2 \text{ and } n = 380,\ y \propto p_1^{-0{\cdot}44}, \end{aligned}$$

but it is quite possible that more observations would correct the

apparent want of consistency. In all cases, however, y is greatly affected by the value of p_1.

WILLANS' CONDENSING TABLE IV. TRIPLE SERIES.

p_1	r	n	y	W	I	$\frac{W}{I}$
177·29	13·72	379·1	0·145	383·60	29·46	13·02
175·5	14·01	383·7	0·168	380·3	29·84	12·74
157·55	13·66	380·5	0·148	343·4	26·66	12·88
128·12	14·11	383·6	0·180	285·56	21·32	13·39
53·97	14·10	376·6	0·269	143·02	9·28	15·41
51·12	15·36	381·4	0·318	131·0	8·30	15·78
175·90	13·72	302·4	0·195	297·6	23·14	12·86
130·33	14·23	300·2	0·241	234·57	16·79	13·97
52·66	14·67	301·9	0·415	113·84	6·70	16·99
175·28	21·69	375·4	0·344	283·6	22·26	12·74
143·8	21·31	379·5	0·371	239·2	18·28	13·09
74·12	21·17	375·9	0·418	139·29	9·08	15·34

CHAPTER XXV.

COMBUSTION AND FUEL.

239. ENGINEERING is really the utilisation of **chemical and physical principles**, and yet many men think themselves engineers who have no clear notions of these principles in their fundamental forms. Such men are in truth only capable of doing what other men have done before; they are incapable of foreseeing how any new contrivance will act, but by dint of expensive trial and failure they sometimes arrive at results which they might have arrived at very inexpensively if they had been better educated. This very general ignorance of elementary scientific principles in ingenious men has filled the books on our subject with most misleading numbers, arrived at by unscientific trials. In other branches of engineering if a man desires to make a new departure he can find figures, the results of scientific tests, from which he can calculate with some accuracy how his new contrivance will act; in the subject of applied heat, the practical figures given us in one book contradict each other in the most extraordinary way. In the most authoritative treatises we find on one page that the rate at which heat passes through a square foot of boiler heating surface is practically independent of whether the metal is copper or iron, and figures that pretend to be right to the one ten thousandth part are quoted establishing this fact. A few pages further on we find equally elaborate results showing that the thermal resistance of the metal plate is proportional to its thickness and is ever so much greater in iron than copper. The authors of these treatises do not seem for a moment to think that they have given the same weight to two **contradictory statements.**

It would be easy to quote many examples of this divorce of what is regarded as practical experience from a knowledge of the most elementary scientific principles. The most unsatisfactory part of the disjunction is this, that although we are sure that the expensive experiments were performed, the author in describing them has left out as of no consequence the very facts which would make them

useful. Usually, however, he has merely paid no attention to what happens to be the most important varying factor in his experiment, and of course his results are inconsistent with one another. All this has made the phenomena in boilers seem to be much more difficult to understand than they really are, and every well-meaning engineer who gives us new figures about heat phenomena from his own measurement, is only adding to a large array of inconsistent looking facts. I am sorry to say that half the writers of papers published by even the highest scientific societies are as ignorant of elementary truths. What is much wanted is a study of combustion and the conduction and other transference of heat in their very simplest forms, in chemical and physics laboratories.

In this book I can only state principles and assume that students have made them part of their mental machinery. I need hardly say that it is impossible to do this by academic absorption from a book.

240. Chemical symbols have been cunningly contrived so that they convey a vast amount of information, and by the help of certain tables which have been very carefully prepared they enable us to make exact calculations. To explain fully what follows so that a student shall not get misleading notions is no part of my business; just now I look upon these statements as mere helps to the memory.

A molecule of each of many of the simple gases consists of two atoms. An atom of hydrogen is indicated by H; n atoms by nH or H_n. An atom of carbon is indicated by C, an atom of oxygen by O, and of nitrogen by N. If the weight of the atom of hydrogen is taken as 1, the atomic weights are H, 1; C, 12; O, 16; N, 14.[1]

The following are the symbols of the gases (one molecule of each) with which we are most concerned:—H_2; O_2; H_2O, gaseous water or steam; CO, carbon monoxide (commonly called carbonic oxide); CO_2 carbon dioxide (commonly called carbonic acid); CH_4, methane (commonly called marsh gas or light hydrocarbon); C_2H_4, ethylene (commonly called olefiant gas, the best known heavy hydrocarbon).

There are the same numbers of molecules of any gas to the cubic foot, and therefore supposing for convenience we take H_2 as indicating two cubic feet of hydrogen, O_2 indicates two cubic feet of oxygen, CO_2 indicates two cubic feet of carbon dioxide, CO indicates two cubic feet of carbon monoxide, H_2O indicates two cubic feet of gaseous water, &c., the idea being that they are all in the perfectly gaseous state and at the same temperature and pressure. By weight, if H_1 indicates 1 lb. of hydrogen, H_3 indicates 3 lbs.; O_3 indicates 3 times 16 or 48 lbs. of oxygen; H_2O indicates

[1] More exactly, H, 1; C, 11·92; O, 15·88; N, 13·94.

$2 + 16$ or 18 lbs. of water and so on. It is evident that the mere symbol of a gas such as C_2H_4 tells us its density; thus C_2H_4 has the same volume as H_2 or O_2 or CO_2 or CO or H_2O, and therefore $(2 \times 12) + (4 \times 1)$ or 28 lbs. of olefiant gas has the same volume as 2×1 or 2 lbs. of hydrogen, or as 2×16 or 32 lbs. of oxygen or $12 + (2 \times 16)$ or 44 lbs. of carbon dioxide or $12 + 16$ or 28 lbs. of carbon monoxide or $2 \times 1 + 16$ or 18 lbs. of gaseous water.

241. Consider such an equation as

$$H_2 + O = H_2O$$

We can read this in the following ways:

(1) One molecule of hydrogen combines with half a molecule[1] of oxygen to form one molecule of water.

(2) Two atoms of hydrogen combine with one atom of oxygen to form one molecule of water.

(3) Two cubic feet of hydrogen combine with one cubic foot of oxygen to form two cubic feet of gaseous water.

(4) 2 lbs. of hydrogen combine with 16 lbs. of oxygen to form 18 lbs. of water.

I may add that the total amount of heat derivable from the combustion of 1 lb. of hydrogen is 62,100 Fahrenheit (34,500 centigrade) pound units of heat, the stuff resulting from the combustion being reduced to 62° F.; ordinary differences as to the pressure of the gases beforehand and after being quite insignificant. In what follows, calorific power will be in centigrade heat units unless Fahrenheit is specially mentioned. I have at some length dwelt upon those parts of the signification of the equation $H_2 + O = H_2O$ which are interesting to us. Let the student in the same way write out similar statements concerning each of the following.

$$CH_4 + 4O = CO_2 + 2H_2O$$
$$C_2H_4 + 6O = 2CO_2 + 2H_2O$$

The following equations need not be stated volumetrically because we know nothing of carbon in the gaseous state.

$$C + O = CO$$
$$C + 2O = CO_2$$

242. If a pound of **hydrogen** is already in combination with carbon, and the hydrocarbon is burnt in air we assume that the energy required to decompose it is too small to be worth troubling

[1] To speak of half a molecule is a little absurd, but here it saves trouble. The student may if he pleases double everything in the formula and in these four statements.

about. This is partly because we do not know the amount, but also because we know that it cannot be great.

The presence of hydrogen in a fuel is conducive to rapid ignition; the hydrocarbons volatilise below redness and ignite, heating the rest, leaving the fixed carbon porous. This is why wood, peat, and some kinds of brown and gas coals flame so much. When there is little hydrogen, we get flame by using insufficient air so that only carbon monoxide is produced, and this with more air gives flame. Steam conduces to flame production.

243. Again, when a pound of **carbon,** say charcoal, is completely burnt, the heat of combination must be somewhat different from what it is if the carbon is part of a hydrocarbon. We assume it to be the same (8,040 units) because we do not know any better. It is urged by some eminent persons that as the combination of 1 lb. of C with O to form CO gives 2,470 units of heat, and the further combination of the so produced CO with O to form CO_2 gives 5,600 units of heat, the difference between these numbers represents the latent heat of gaseous carbon. It is a most unscientific statement, as the two cases of combination of C with O have about as much to do with one another as Tenterden steeple and the Goodwin Sands.

In a fuel we distinguish between that portion of the carbon which is called 'fixed' (which would be left as charcoal or coke after destructive distillation) and that which is volatile (being combined with hydrogen as a hydrocarbon like marsh or olefiant gas). Fixed carbon needs to be scrubbed with air as it burns. A hydrocarbon, if mixed at a high enough temperature with a sufficient quantity of air, burns completely into CO_2 and H_2O with a blue flame. But if the hydrocarbon not mixed with air is at a high temperature and is suddenly cooled, it becomes decomposed partly into marsh gas and partly free hydrogen, and much of the carbon separates out as solid particles which we call smoke or soot. If, however, there is sufficient air in the atmosphere containing this smoke, and it is heated to a high enough temperature, the carbon becomes consumed forming reddish yellow or white flame.

The burning of carbon seems to be always complete at first, that is, some of the C becomes CO_2. If, however, this CO_2 comes in contact with white-hot solid carbon, it seems to dissolve the solid and become carbon monoxide, and if the process stops here there is great waste of fuel. The presence of moisture conduces to this action. It is for this reason that when boiler fires are thick it is necessary to admit air *above* the fire as well as below.

244. EXERCISE 1. Olefiant gas has the composition C_2H_4; in 1 lb. of it, how much carbon and how much hydrogen are there?

Answer. 2 × 12 or 24 lbs. of C + 4 lbs. of H are in 28 lbs. of C_2H_4.
Hence $\frac{6}{7}$ lb. of C + $\frac{1}{7}$ lb. of H are in 1 lb. of C_2H_4.

EXERCISE 2. What is the calorific power of 1 lb. of C_2H_4?

Answer. $\frac{6}{7}$ × 8,040 + $\frac{1}{7}$ × 34,500 = 11,820 units.

The experimentally determined number is 11,960.

Experimentally determined, the heat of combustion of 1 lb. of oil of turpentine is 10,850; wood charcoal 8,090; gas coke 8,050; graphite 7,780; sulphur 2,250.

For the following I have taken in each case the means of four careful calorimetric measurements of 1 lb. of each;—carbon monoxide 2,425, marsh gas 13,240, olefiant gas 11,960, benzene C_6H_6 10,100.

245. To recapitulate a little. We see then that in considering the combustion of a fuel, 1 lb. of hydrogen needs 8 lbs. of oxygen, and forms 9 lbs. of water. The total heat available is 62,100 Fahrenheit or 34,500 Centigrade units of heat. But when we state calorific power it is preferable not to deduct the latent heat of water. If the water goes off uncondensed as it usually does in our engines, we may roughly say that the total heat available is 62,100 − 966 × 9 units or 53,400 Fahrenheit or 29,800 Centigrade units. One pound of carbon needs 2·67 lbs. oxygen, and forms 3·67 lbs. of carbonic acid (called by the chemist, carbon dioxide). The heat available is 8,040 Centigrade units. In this case the combustion is said to be complete. But 1 lb. of carbon may unite with 1·33 lb. of oxygen to form 3·33 lbs. of carbonic oxide (called by the chemist, carbon monoxide). The heat available is 2,470 units and the combustion is incomplete. The combustion may or may not be afterwards completed. One pound of oxygen is contained in 4·35 lbs. of air; hence, knowing how much oxygen is needed we know the amount of air needed. When we know the chemical composition of a fuel we can tell the weight of oxygen, and therefore the **weight of air** needed for complete combustion, and we can roughly determine the amount of heat available if we calculate merely from the carbon and hydrogen which are contained in the fuel. Students who know a little chemistry are aware that there is no rule for making this calculation of **the calorific power** which is not likely to be in error as much as, if not more, than 5 per cent. There is no handy instrument which will enable the calorific power to be measured with greater accuracy than this. It is a regular laboratory exercise with my students to measure it with a handy instrument, and it is an instructive lesson to show them the incorrectness of the method. Unless, therefore, we take a very troublesome method of measurement, we cannot do better than to calculate from the chemical composition. Students ought to calculate the calorific power and

the air required for the combustion of some of the fuels of the following tables in this way. They may, later, use the formula that follows.

Example. One pound of each of the following fuels contains the following fractions of 1 lb. of carbon and hydrogen. Find the weights of oxygen required for complete combustion. As there is only ·23 lb. of oxygen in 1 lb. of air, we must divide by ·23 to find the weights of air required. From $1\frac{1}{2}$ to twice this amount of air is usually admitted to a boiler furnace.

1 lb. of Fuel.	lb. of Carbon.	lb. of Hydrogen	lb. of Oxygen needed.	lb. of Air needed.	Heat developed.	Evaporative power.
Dried wood	0·40	0·05	1·467	6·38	4941	9·20
Brown coal	·55	·01	1·547	6·726	4767	8·88
Bituminous coal	·70	·05	2·267	9·86	7353	13·70
Average British coal	·80	·05	2·534	11·02	8157	15·19
Welsh steam coal (average)	0·84	·05	2·64	11·48	8479	15·79
Anthracite	0·92	·03	2·69	11·71	8432	15·70
Coke	0·88	0	2·347	10·21	7075	13·17
Petroleum	0·85	·15	3·467	15·08	12010	22·36
Coal gas	0·58	·23	3·387	13·08	12600	24·13

Example. One cubic foot of each of the following gaseous fuels contains the following fractions of a cubic foot of the gases stated. Find the cubic feet of oxygen required for complete combustion. There is ·208 of a cubic foot of oxygen in one cubic foot of air, therefore divide by ·208 to find the cubic feet of air needed for complete combustion.

One cubic foot of	Hydrogen.	Carbonic Oxide.	Marsh Gas.	Heavy Hydrocarbons.	Carbonic Acid, Nitrogen, &c.	Comparative values of Calorific powers per cubic foot.	Cubic feet of air required for complete combustion.
Average coal gas	·47	·09	·34	·05	·05	5·3	5·7
London ,,	·506	·039	·37	·055	·054	5·41	5·66
Scotch ,,	·36	·068	·42	·15	·036	5·56	7·23
Midland ,,	·416	·044	·41	·075	·072	5·27	6·13
Dowson gas	·187	·251	·003	·003	·556	1·24	1·125
,, ,,	·265	·182	·005	·005	·423	1·34	1·195
Generator gas	0	·34	0	0	·66	1	·815
Siemens gas	·06	·20	·01	·01	·72	1	·865
Water gas	·50	·50	0	0		2·7	2·404
Generator water gas	·12	·38	0	0	·50	1	·961

246. It is customary to calculate **calorific powers of fuels** by the following formulæ which ought to be known to students.

When a fuel contains hydrogen and oxygen in the proper proportion to form water, it is assumed that they may be left out of the calculation of the calorific power. Their effect is only to form smoke more easily. We have therefore the following rule:—

Suppose that c, h and o are the weights of carbon, hydrogen and oxygen in a fuel. Subtract $\frac{o}{8}$ from h, and call the remainder the *available* hydrogen. Consider 1 lb. of hydrogen to have 4·28 times the calorific power of carbon, and thus our pound of fuel has the same calorific power as

$$c + 4{\cdot}28\left(h - \frac{o}{8}\right)$$

pounds of carbon. That is, if h^1 is the heat per pound of fuel and if E is its evaporative power (being h^1 divided by latent heat of steam at 100° C.), then

$$h^1 = 14{,}500\left\{ c + 4{\cdot}28\left(h - \frac{o}{8}\right)\right\} \text{in Fahrenheit units}$$

$$h^1 = 8{,}050\left\{ c + 4{\cdot}28\left(h - \frac{o}{8}\right)\right\} \text{in Centigrade units}$$

$$E = 15\left\{ c + 4{\cdot}28\left(h - \frac{o}{8}\right)\right\} \text{in evaporation units}$$

Students will calculate h^1 and E for each of the fuels of Art. 256. I am sorry to say that this formula, long accepted as giving a fair agreement with calorimetric tests, ought to have 5 per cent. added to its value. It has been found to give from 1·5 to 10·6 per cent. too low a value. A formula now getting into use which is **supposed to be more correct** is

$$h^1 = 8{,}140\ c + 34{,}500\ h - 3{,}000\ (o + n)$$

where n is the weight of nitrogen present in a pound of fuel.

In the table the heat due to the fixed carbon is obtained by assuming that nothing is burnt except that part of the carbon which is fixed; the rest going off unconsumed.

247. The student will now work the following easy algebraic exercises. A pound of fuel contains c lb. of carbon, h lb. of hydrogen, o lb. of oxygen, show that roughly;—

1. The pounds of **air needed** for complete combustion

$$A = 11{\cdot}6\,c + 34{\cdot}8\,h$$

2. The **products of combustion** are

$3\frac{2}{3}\,c$ lbs. of carbon dioxide

$9\,h$ lbs. of steam

$8{\cdot}9\,c + 26{\cdot}8\,h$ of nitrogen.

Work now the following numerical exercises on the above.

3. Taking average coal $c = 0{\cdot}8$, $h = 0{\cdot}05$, $o = 0{\cdot}08$
Calculate E, A, and the products.

Answer. 14·57 ; 11·02 ; 2·933 lbs. of CO_2, 0·45 lb. of H_2O, 8·49 lbs. of N.

4. By Art. 189 find **the specific heat** of the products from average coal ; given the following specific heats : carbon dioxide ·216, nitrogen ·244, steam ·475.

Answer.
$$\frac{2{\cdot}933 \times {\cdot}216 + 0{\cdot}45 \times {\cdot}475 + 8{\cdot}49 \times {\cdot}244}{2{\cdot}933 + 0{\cdot}450 + 8{\cdot}490}$$
$$= \frac{{\cdot}634 + {\cdot}213 + 2{\cdot}071}{11{\cdot}873} = 0{\cdot}246$$

5. The specific heat of air is ·238 ; if, in addition to every 1 lb. of necessary air, we admit a lb., what is the specific heat of the products ? *Answer.*—$(·246 \times 11{\cdot}873 + 11{\cdot}02\,a \times 0{\cdot}238) \div (11{\cdot}873 + 11{\cdot}02\,a) = ·238\,(1{\cdot}113 + a)/(1{\cdot}077 + a)$.

6. Find the quantities and specific heats of the products when 30, 70 or 100 per cent. excess air is admitted in the burning of average coal.

Answer. 15·2 lbs. of specific heat 0·244, 19·6 lbs. of specific heat ·243, 22·9 lbs. of specific heat ·242.

In each case part of the total amount of products is 0·45 lb. of steam.

7. In cases where the products are 15, 20 and 23 lbs. per pound of fuel ; taking the specific heat as ·243 in every case, what is the **necessary loss of evaporative power** in the following cases : The outside atmosphere is at 62° F. The boiler water is at 212° F., 322° F., 382° F., 402° F. *Ans.* If $\theta°$ F. is the temperature in the boiler, and w the weight of products, $0{\cdot}243\ w\ (\theta - 62) \div 966$ is

the evaporation which cannot be utilised; the answers are as follow:—

Weights of products.	Necessary diminution of evaporative power for the following Temperatures of Water in Boiler.			
	212° F., or 15 lbs. pressure.	322° F., or 93 lbs. pressure.	382° F., or 200 lbs. pressure.	402° F., or 250 lbs. pressure.
12	·453	·785	·955	1·03
15	·566	·984	1·19	1·27
20	·755	1·31	1·59	1·7
23	·867	1·41	1·83	1·95

8. One pound of the fuel of Ex. 4 produces 0·45 lb. of steam; the hygroscopic water being 0·05 lb., we have 0·5 lb., whose total heat loss in falling from the temperature of the boiler water to 62° F. ought also to be deducted. We have already considered this loss if it were merely steam vapour. But it loses latent heat 966 units per lb., and if cooled to 62° F., would cool as water and not as steam gas. Hence $966 + (212 - 62) \times (1 - 0{\cdot}475)$ or, 1,045 is the extra heat per pound, or $522 \div 966$, or 0·54 is the loss of evaporation due to this cause.

9. The coal of Ex. 4 is burnt in a boiler whose water is at 322° F. (93 lbs. pressure); 70 per cent. excess air is admitted, what is the **available evaporative power?** *Ans.* 14·57 from Ex. (3) minus 1·3 from Ex. (7) minus 0·54 from Ex. (8) gives us 12·73 lbs. of water evaporated as from and at 212° F. per pound of fuel.

10. If the feed water of the boiler is supplied at 62° F., and evaporated at 322° F. (or 93 lbs. per square inch), and if the steam leaving the boiler is (1) dry steam, (2) has 5 per cent. of wetness, what is the greatest possible amount producible per pound of fuel of Ex. 9? This exercise is in natural sequence with the others, and so I do not like to remove it to Art. 248.

Ans. (1) 1 lb. of water from 62° F. to 322° F. needs 260 units of heat; 1 lb. of this kind of steam needs the latent heat 887. Total, 1,147 units. (2) 1 lb. of water from 62° F. to 322° F. needs 260 units of heat; 0·95 lb. of this kind of steam needs the latent heat $887 \times 0{\cdot}95$ or 843 units; total, 1,103 units. Hence the standard evaporation of 1 lb. is equivalent to $\frac{966}{1147}$ lbs. dry or $\frac{966}{1103}$ lbs. wet, or 12·73 of standard evaporation is equivalent to 10·72 lbs. of this dry steam, or 11·15 lbs. of this wet steam.

11. The hydrocarbons of the above (Ex. 4) average coal, escape

unburnt; the fixed carbon is only 0·57 lb. per pound of fuel; there is no moisture present; the products of combustion are 23 lbs. per pound of fuel, specific heat 0·24, water in boiler 322° F. What is the available evaporative power of the fuel (assuming flues so perfect that the gases are reduced to the temperature of the water)?

What is it if it is arranged that the gases must not enter the chimney at a lower temperature than 580° F.?

The feed water being at 62° F., convert the last answer into actual evaporation of dry steam, assuming that 10 per cent. of the heat is lost by radiation from the boiler itself.

12. One pound of average coke contains 15 per cent. moisture and 80 per cent. carbon, the rest being ash and a trace of sulphur.

What is its evaporative power and the amount of air needed for complete combustion? *Ans.* 15 × ·8 or 12 lbs. of evaporation; 11·6 × ·8 or 9·3 lbs. of air.

13. For the coke of last exercise. If 70 per cent. excess of air is admitted at 62° F., and if the temperature of the water in a boiler is 320° F.; the products of combustion having a specific heat 0·24, what is the really available evaporative power? *Ans.* The quantity of products is (9·3 + 1) 1·70 or 17·51 lbs.; the heat lost because this can cool only to 320° F. is (320 − 62) 0·24 × 17·51 = 1,085 units. Also the latent heat of ·15 lb. of moisture is 966 × ·15 or 135 units. Our calculation is only roughly correct because the moisture wastes more heat than this. Taking this as sufficiently correct, the unavoidable waste is 1,085 + 135 or 1,215 units, and this divided by 966 is 1·26 lb. of evaporation. Hence the available evaporation is only 10·7 lbs.

It is usual to speak of 12 lbs., or 150 **cubic feet of air,** as being necessary for the complete combustion of 1 lb. of coal, and to be quite certain of there being enough we must admit more than enough.

When the fuel is not thick on the grate as in Cornish and Lancashire boilers, with a chimney to produce the draught, it is difficult to distribute the air properly and so to be sure that each piece of coal has enough air to scrub it, we admit, on the whole, about 24 lbs. of air per pound of fuel. When the fires are thick and there is forced draught we admit as little as 18 lbs., or even less air per pound of fuel, getting very complete combustion.

This is due to the fact that in thick fires the CO_2 formed below, dissolves the carbon higher in the fire forming CO, which is burnt above the fire.

The student will see from exercises like the above that when a pound of coal is burnt **we have losses** of evaporative power something like the following. First, losses due to hot gases escaping—

25 per cent. with chimney draught.

20 per cent. with forced draught.

Second, about 2½ per cent. because of hot ashes and unburnt solid fuel in the ashes.

Third, 18 per cent. when there is decently good firing but no contrivance for controlling the air admission. This assumes the hydrogen to go off unburnt.

Fourth, 9 to 18 per cent. more when there is also bad firing, so that not only does the hydrogen go off unburnt, but all the carbon of the hydrocarbon part goes off unburnt.

Fifth, 5 per cent. due to radiation of heat from a well covered boiler.

The student may add up these losses as he pleases. He may add further loss due to keeping the furnace door open unnecessarily. Also, if the boiler is not well covered with non-conducting material there is further loss.

248. How much steam is produced per pound of coal? When there is no priming [that is when there is no water carried off with the steam] 1 lb. of water needs, to convert it into steam of the following kinds, the following amounts of heat:—

Temperature of the steam. θ° C.	Absolute pressure in lbs. per square inch.	Total heat per lb. required if feed water is at 40° C.	Pounds of steam corresponding to the heat in 1 lb. of average coal or 8,500 units.	Equivalent of 1 lb. in standard of evaporation.
130	39·25	604·3	14·07	1·127
150	69·21	610·3	13·93	1·139
160	89·86	613·4	13·86	1·145
165	101·9	614·2	13·84	1·146
170	115·1	616·4	13·79	1·150
175	129·8	617·2	13·77	1·152
180	145·8	619·5	13·73	1·154
190	182·4	622·5	13·66	1·161
195	203·3	624·0	13·62	1·164

The student ought to calculate the numbers of Col. 3 of the above table as an exercise. They are worked out in this way:— Regnault found that to heat a pound of water from 0° C. to θ° C., and then to convert it into steam, required $606{\cdot}5 + {\cdot}305\theta$ units of heat. We start at 40° C., instead of 0° C., and so we merely subtract 40

from what Regnault's calculation gives us. Thus if θ is 130 as in the table—

$$606{\cdot}5 + {\cdot}305 \times 130 - 40 = 604{\cdot}3$$

Now practical men in comparing their boilers, sometimes said, "My boiler gives 8 lbs. of steam per pound of coal;" another said, "My boiler gives 9 lbs." and the comparison might be very unfair. They saw that they needed a standard. The standard taken is "An evaporation of one pound shall mean, one pound of water at 100° C., converted into steam at 100° C." This is 536 heat units. So students will please fill in the fifth column of the table, as an exercise.

If they know the actual temperature of the feed-water of a particular boiler they ought to get out a table for it like the above.

EXERCISE 1. How much heat has been given to a pound of feed-water at 40° C., to convert it into what is $\frac{3}{4}$ steam and $\frac{1}{4}$ water at 160° C.? *Answer.* $\frac{1}{4}$ lb. of water needed $(160 - 40) \div 4$ or 30 units. $\frac{3}{4}$ lb. steam needed $\frac{3}{4}$ $\{606{\cdot}5 + {\cdot}305 \times 160 - 40\}$ or 462 units: therefore, the pound of wet steam needed 492 units to produce it. Notice that this is 20 per cent. less than what is given in the table.

EXERCISE 2. When an engineer says that his boiler evaporates 10 lbs. of water for every 1 lb. of coal, his feed being at 20° C., and his steam at 190° C.; and another engineer says that his boiler evaporates 11 lbs. of water, his feed being at 60° C. and his steam at 130° C., compare the two numbers. One gets too much into the habit of thinking that 1 lb. of steam just needs as much heat to produce it as 1 lb. of any other kind of steam.

The total heat of 1 lb. of steam at 190° C. is

$606{\cdot}5 + {\cdot}305 \times 190$ or 664 units. Subtract 20 and we get 644.

The total heat of 1 lb. of steam at 130° C. is $606{\cdot}5 + {\cdot}305 \times 130$, or 646, and subtracting 60 we find 586 units. Hence 10 lbs. of the first amounts to 6,440 units, and 11 lbs. of the second amounts to 6,446 units. The two evaporations are then practically the same. Statements then of amounts of evaporation are misleading unless we use a standard of evaporation, and so we always convert any amount of evaporation into an equivalent number of pounds of water at 100° C., converted into steam at 100° C. This unit requires of course the latent heat of steam per pound, 536 heat units.

EXERCISE 3. $10\frac{1}{2}$ lbs. of water heated from 40° C., and converted into steam at 180° C., find the equivalent standard amount. *Answer.*

the total heat of 1 lb. of the steam is 606·5 + ·305 × 180, or 661·4 units. Subtract 40, multiply by 10½, and divide by 536, and we find the answer 12·2 lbs.

We have the rule "To find the total heat of evaporation:—to 536 add 1 for every degree that the feed is below 100° C, and ·3 for every degree that the steam is above 100° C.

249. In the Fahrenheit scale calculate the following numbers and keep the table by you for reference. The standard of evaporation is the heat required to produce 1 lb. of dry saturated steam at 212° F. from water at 212° F., and is equivalent to 966 Fahrenheit pound heat units.

From Regnault we know that to convert 1 lb. of feed-water at θ°_0 F. into steam at θ° F. needs $1{,}081 + \cdot 305\theta - (\theta_0 - 32)$ units; this divided by 966 will express the heat necessary to produce a pound of such steam in terms of the standard of evaporation.

Pressure of Steam.	Temperature of Steam. θ° F.	Temperature of Feed Water.					
		32° F. 0° C.	68° F. 20° C.	104° F. 40° C.	140° F. 60° C.	176 F. 80° C.	212 F. 100° C.
14·7	212	1·19	1·15	1·11	1·08	1·04	1·00
28·8	248	1·20	1·16	1·13	1·09	1·05	1·01
52·5	284	1·21	1·18	1·14	1·10	1·06	1·02
89·9	320	1·22	1·19	1·15	1·11	1·07	1·03
145·8	356	1·23	1·20	1·16	1·12	1·08	1·04
225·9	392	1·24	1·21	1·17	1·13	1·09	1·06
336·3	428	1·25	1·22	1·18	1·14	1·11	1·07

Thus when we say that the standard evaporation of 1 lb. of coal is 10·3, we mean that 1 lb. of coal will produce 10·3 ÷ 1·20, or 8·6 lbs. of steam at 356° F. from feed-water at 68° F.

250. EXERCISE. The Nixon's Navigation coal used by Donkin and Kennedy in their boiler tests (Art. 261) had a total evaporative power 16·47 [as from and at 212° F.], if measured by the chemist, and needed 10·5 lbs. of air for complete combustion. Taking the specific heat of the gases as ·243, and that ·37 lb. of water goes off with the gases;—

1. Show that if θ°_0 F. is the temperature of the boiler-room, and θ the temperature of the steam, the heat necessarily wasted in burning this coal in a *perfect boiler* with just the right amount of air is $\dfrac{11\cdot5 \times \cdot243(\theta - \theta_0)}{966}$ in evaporation units.

2. Taking the temperature of the air in the boiler-room as 60° F.

show that for the following pressures of steam in the boiler we have the following results :—

Absolute Pressure.	Heat (in evaporative units) necessarily going off in gases.	Greatest possible evaporation from and at 212° F.	Percentage of Chemist's determination.
14·7	·43	15·67	95
30	·54	15·56	94·5
50	·63	15·48	94
75	·70	15·4	93·5
100	·76	15·34	93
150	·84	15·26	92·5
200	·91	15·19	92·25
250	·96	15·13	92

3. Make out tables for $1\frac{1}{2}$ and twice the amount of air necessary for complete combustion.

Absolute Pressure.	Evaporative power in a perfect Boiler as from and at 212° F.		
	Air 1.	Air $1\frac{1}{2}$.	Air 2.
14·7	15·67	15·46	15·24
30	15·56	15·29	15·02
50	15·48	15·16	14·85
75	15·4	15·05	14·70
100	15·34	14·96	14·58
150	15·26	14·84	14·42
200	15·19	14·73	14·28
250	15·13	14·65	14·17

It will be seen that if $\theta°$ F. is the temperature of the steam; if $\theta°_0$ F. (taken usually as 60° F.) is the temperature of the supplied air; if E is the evaporative power of the fuel as found in the fuel tester; if A is the weight of air supplied per pound of fuel, if w is the weight of water going off, the true evaporative power in a perfect boiler is

$$E' = E - w - \cdot 238(\theta - \theta_0)(A + 1)$$

and this is what I call a in my formula, Art. 262.

251. Coal Tester. Some coal from different parts of each sack being taken from many sacks, it is spread out evenly on a clean floor, and again and again sampled from different parts, till a small quantity is obtained which may be regarded as an average sample. It may be tested chemically,[1] and the calorific power calculated as in Art. 246,

[1] Thorpe's Dictionary gives the following as the process in use by students at the Royal College of Science.

or it may be burnt with oxygen in a calorimeter, and the heat directly measured. In a simple form, the Thomson calorimeter, a small weighed quantity of powdered coal is placed in a small platinum crucible inside a glass vessel, surrounded by about two quarts of water in another glass vessel; oxygen is admitted by a brass tube, and plays on the surface of the coal which is ignited by a fuse. The products of combustion which do not stay inside, escape by holes in the bottom of the vessel and pass up as bubbles through the water, being broken up by wire gauze, so that all the heat of combustion raises the temperature of the water by an amount which may be measured with a thermometer. I have seen spiral tubes immersed in the water provided for the escape of the products instead of by bubbling.

In a calorimeter in common use the powdered fuel is mixed with a sufficient quantity of a mixture of the chlorate and nitrate of potassium to generate enough oxygen for the combustion. My students have used this for twenty years, and they know quite well that the results of such a test are not particularly valuable.

252. The **Gas Tester of Mr. Dowson**, as used in my laboratory, burns the gas; the hot products are cooled nearly to the temperature of the room by contact with metal kept cool by flowing water. There being a steady state of flow of gas and water, the rate of flow of the gas is measured in a gas meter; the rate of flow of the water is occasionally tested by measuring the time taken to fill a marked vessel. The difference of temperature of the entering and leaving water (usually about 15 or 20 centigrade degrees) is measured by two thermometers, and this enables the calorific power to be calculated.

253. Temperature of Combustion. It is difficult to know what a man means when he says that he has **measured** the temperature of a flame. No doubt he may measure the temperature of something immersed and struck by the flame. Our difficulties increase when he says he has **calculated** the temperature of a flame. The ordinary method of calculation is infantile in its simplicity.

EXERCISE 1. Wood charcoal (calorific power 8,080), is burnt in just the right amount of air for complete combustion. What is the rise of temperature? *Answer.* We have 12·6 lbs. of products, of specific heat, say 0·24, and 8,080 ÷ (12·6 × ·24) is 2,672 degrees centigrade.

I refrain from giving the usual exercises by which the combustion of charcoal in oxygen gives 10,183° C., or of hydrogen in oxygen 6,743° C. Calculations like this can give no notion even of

the *relative* temperatures produced in the several cases. It is evident that the existence of dissociation will not allow us to assume a constant capacity for heat in the products of combustion. Coke in a furnace produces much more intense heat than coal. In glass-making it is found that 8 or 9 lbs. of coke is equivalent to 12 lbs. of coal in usefulness from this cause. When coke is used in a boiler the fire-box part receives much more heat relatively to the flue part than when coal is used. More intense heat is producible by gaseous fuel than by solid, mainly because there need be no excess air.

254. Fuels. The numbers of the following tables give some idea (really a very rough one and sometimes misleading) of the usual composition of one pound of each of the fuels by weight. Substances which occur in mere traces, such as sulphur, are not mentioned. The oxygen is mainly combined with an eighth of its weight of hydrogen as water, and it would be worth while for a student to merely give two columns of numbers, as in the table of Art. 245, one of carbon, the other to be headed "hydrogen," and to be really the hydrogen of the table, with one eighth part of the oxygen subtracted from it, because the combustion of this hydrogen may be thought complete already in the fuel. $h - o/8$ is usually called the *available hydrogen.* I had carefully prepared a column showing the amount of fixed carbon in each, but I have had to discard it. It is interesting to note that our knowledge about the composition and properties of fuels is practically the same as what was available forty years ago. In preparing this book I have made strenuous efforts to increase what was known to me in 1870, but I find **no new reliable information.**

255. Dried wood is nearly all of much the same chemical composition; air-dried wood has usually 20 per cent. of hygroscopic water, 50 per cent. carbon, 6 per cent. hydrogen, 42 per cent. oxygen. Some has very little ash; some from 2 to 5 per cent. Sometimes cotton-stalks, brushwood, straw, the residue of sugar cane and other **vegetable refuse** are used as fuels. **Peat** is of very varied density. It is woody tissue changed more or less by oxidation, CH_4 and CO_2 being given off. It has in boilers about half the evaporative power of coal. In our imperfect calorimeter, peat in its usual state has an evaporative power 4·7; dried 6·0. The older peats are not very different from recent brown coal. The fuels obtained artificially from wood, charcoal, and liquid and gaseous hydrocarbons are not in use for boilers.

Coal varies in specific gravity from 1·2 to 1·8. The recent or young coals, lignite and brown coal, retain some of the woody struc-

ture which has disappeared in ordinary or older coal, in which the elements of the woody fibre have escaped as carbon-dioxide, marsh gas and water, the decomposition being due not so much perhaps to oxygen of the air as to mouldering and internal action.

The **gradual change** from woody tissue is shown in the following table of vaguely correct numbers:—

	Carbon.	Hydrogen.	Oxygen.
Wood	100	12·18	83·07
Peat	100	9·85	55·67
Lignite	100	8·37	42·42
Bituminous coal	100	6·12	21·23
Anthracite	100	2·84	1·74

It is evident that the change which a few millions of years' burial, probably under great pressure and some increase of temperature, produces in wood, is to increase the proportion of carbon and diminish that of oxygen; observe that the change is gradual, brown earthy coal and lignite being younger than bituminous, and this being usually younger than anthracite.

From this point of view the following table of composition of brown coal is interesting.

	Carbon.	Hydrogen.	Oxygen and Hydrogen. Neglecting Water and Ash.
Fibrous brown coal . . .	·63	·05	·32
Earthy ,, ,, . . .	·72	·05	·23
Pitch ,, ,, . . . (conchoidal in fracture and evidently becoming bitumen).	·77	·075	·155

256. Lignite burns with a long, smoky flame; calorific power 4000 to 6000; does not cake. **Ordinary coal** is vegetation, such as water-logged drift-wood, or standing trees, which has been covered up with sand and clay, and is found in beds from ¼ inch to 4 feet thick, these sometimes forming much thicker beds, with thin partings of sand or clay between. It is found in the most ancient and most modern geological formations, with every variety of colour and appearance, from the brown Scotch cannel to the velvet black Newcastle caking

coal. With no lustre as in some cannels, to the shining bituminous caking coal and to the semi-metallic iridescent anthracite. There is the softness of Newcastle coal, and the hardness of anthracite coal which yields no bitumen to any re-agent.

The **carbon** varies from ·70 to ·94 in anthracite.
„ „ ·57 to ·84 in cannel.
„ „ ·75 to ·83 in splint coal,

but there are not these extremes in all bituminous coals. *Bituminous* is the name, not wisely but well given, to the coals whose properties are between those of lignite and anthracite. Probably *flaming* is a better title.

The **hydrogen** varies from 1·5 per cent. in anthracite to 9 per cent. in some Scotch coals. In fact it is obvious that coals are of the most varied chemical constituents. They have from 1 to 34 per cent. of **ash.** All yield solid, liquid, and gaseous products. A shale has almost no fixed carbon; anthracites have much. **Good coke** is only obtained from caking coals, in which the volatile parts are 25 to 40 per cent. of the whole, so that the coke is 75 to 60 per cent. The fixed carbon varies from 18 to 52 per cent. in caking coals.

Anthracites are almost all carbon, and have a short flame, easily extinguished unless kept at high temperature and scrubbed with air. They are difficult to ignite. The specific gravity varies from 1·4 to 1·6. Hard, brittle, submetallic lustre, conchoidal fracture, smokeless flame. Free burning, **bituminous coals** have about 15 per cent. of their weight of volatile hydrocarbons (marsh gas, olefiant gas, tar, naphtha, &c.); when heated they swell and become porous, so that air gets well into every part. If dry there is not much tendency to smoke. Specific gravity 1·25 to 1·3. **Bituminous caking** coals as from Newcastle (usually velvet or grey-black in colour, uneven in fracture, soils the fingers, and fractures in little cubes) have sometimes as much as 30 per cent. of volatile hydrocarbons in them. They burn with a long yellow flame, soften with heat, portions tend to adhere, and they do not become porous when heated, so that they give more trouble in furnaces. Specific gravity 1·2 to 1·25. The bituminous coals have more calorific power as they have more volatile constituents in them, but this renders it more difficult to burn them in boiler grates. Even with the best hand-firing they are apt to give rise to smoke and soot deposited in the flues. **Welsh coal** gives least trouble to the stoker

in preventing smoke, but mixtures of Newcastle and Welsh coal are also not difficult to deal with. We may, however, say that even in special trials with the most careful hand-stoking some fuel goes away unburnt. The presence of water or of much oxygen in the fuel seems to conduce to the **formation of smoke.** However bituminous a fuel may be, if its volatile constituents are mixed at a sufficiently high temperature with enough air, they burn completely with a blue flame. If heated first and cooled before mixing with air, they decompose into marsh gas and hydrogen and carbon, and deposit the carbon as smoke and soot, and the higher the temperature and the more sudden the cooling the more soot will be formed. This is the most important kind of imperfect combustion. Thus one pound of average English coal has 0·80 lb. of carbon and 0·05 lb. of hydrogen, and we shall see that its evaporative power is 15·2. But if we drive off the volatile parts unconsumed (because we do not mix them with air at a high enough temperature), we have only 0·57 lb. of fixed carbon left, and the heat due to this, even if we capture it all, can only produce an evaporation of 8·6. As for the fixed carbon, it burns, forming carbon dioxide. But if sufficient air is not supplied, its combustion is imperfect, it forms carbon monoxide only, and this is another kind of imperfect combustion due to there not being a sufficient supply of air. In the burning of coke, or the fixed carbon, in shallow fires especially, it will be found that the fuel needs to be actually **scrubbed with air.**

Of the bituminous coals, we have *splint or hard coal*, black shaded with brown in colour; slaty curved principal fracture; cross fracture uneven and splintery; not easily broken; does not kindle easily; gives a clear fire, high temperature; is much prized. *Cherry or soft coal*, common in Staffordshire, is more abundant than the last; has a velvety black or slightly grey appearance, sometimes with shining lustre; does not cake; is easily broken, with a slaty fracture, so that there is considerable waste; it is easy to ignite, and burns quickly. *Cannel* coal, common near Glasgow and at Wigan and Coventry; so called because it burns with a flame like that of a candle, and also called *parrot* because its flat pieces are apt to fly off, making cracking noises. Dark grey or brown in colour; takes a polish (jet is a variety of it); has a flat conchoidal fracture, frequently slaty; does not soil the fingers, is not easily broken; it yields in distillation more volatile products and less coke, more ash and more sulphur than ordinary coal. It has probably been derived from mosses, lichens, seaweed, &c., rather than from tree vegetation like other coals.

One pound of Fuel.	Pounds of Carbon.	Pounds of Hydrogen.	Pounds of Oxygen.	Heat developed. Cent. units.	Evaporative power.
Charcoal—					
Wood	0·93	—	—	7487	13·95
Peat					
Coke—					
Good	0·94				
Medium	0·88	0·038	·01	8351	15·56
Bad	0·82				
Coal—					
(Anthracite)	0·94	0·02	0·01	8196	15·29
,,	0·90	0·03	0·03	8148	15·18
Dry, bituminous	0·90	0·04	0·02	8582	15·99
,, ,,	0·77	0·05	0·06	7663	14·28
Caking	0·88	0·05	0·05	8594	16·03
,,	0·81	0·05	0·04	8069	15·03
Cannel	0·84	0·06	0·08	8375	15·61
Dry long flaming	0·77	0·05	0·15	7266	13·54
Brown earthy	0·74	0·06	0·20	7266	13·54
Lignite	0·65	0·06	0·25	6232	11·61
Peat—					
Kiln dried	0·60	0·07	0·30	5967	11·12
Air dried	0·46	0·05	0·24	4392	8·185
Wood—					
Kiln dried	0·50	0·06	0·42	4300	10·09
Air dried	0·40	0·05	0·33	3530	6·58
Mineral oil (refined)	0·84	0·16	0	12280	22·87
,, ,, (refined)	0·85	0·15	0	10940	20·39

		Carbon.	Hydrogen.	Oxygen and Nitrogen.
Splint coal	Wylam Banks, Newcastle	74·823	6·180	5·085
	Glasgow coal-field	82·924	6·491	10·457
	Wigan, Lancashire	83·753	5·660	8·039
Cannel coal	Parrot coal, Edinburgh	67·597	5·406	12·432
Cherry coal	Jarrow, Newcastle	84·846	5·048	8·430
	Chief coal from Glasgow	81·208	5·452	11·923
Caking coal	Garsfield, Newcastle, deep bank	87·952	5·239	5·416
	South Hetton, Durham	83·274	5·171	3·036

AVERAGE COMPOSITION OF BITUMINOUS COALS FROM DIFFERENT LOCALITIES.

Locality, average of.	Specific gravity of coal.	Carbon.	Hydrogen.	Nitrogen.	Sulphur.	Oxygen.	Ash.	Percentage of coke left by each coal.
36 samples from Wales	1·315	83·78	4·79	0·98	1·43	4·15	4·91	72·60
18 ,, ,, Newcastle	1·256	82·12	5·31	1·35	1·24	5·69	3·77	60·67
28 ,, ,, Lancashire	1·273	77·9	5·32	1·30	1·44	9·53	4·88	60·22
8 ,, ,, Scotland	1·259	78·53	5·61	1·00	1·11	9·69	4·03	54·22
7 ,, ,, Derbyshire	1·292	79·68	4·94	1·41	1·01	10·28	2·65	59·32

The average weight of coal in heaps is 50 to 60 lb. per cubic foot. **Coke** is what remains when the volatile constituents (10 to 65 per cent.) are driven off from coal at a high temperature (in a coke oven is best; in a gas-making retort is next best; in open heaps is least best and least economical). Coke tends to absorb 15 to 20 per cent. of its weight of moisture, even when protected from rain. There is usually 10 to 15 per cent. of ash.

Waste or small **coal pulverized** is often injected with regulated amounts of air from fans into furnaces giving good results.

257. Crude **petroleum** consists of about ·85 of carbon and ·15 of hydrogen. Its calorific power as measured varies from 9950 to 10,830, being greater than that of refined oil. For the same production of heat the volumes of coal and crude petroleum are about as 50 to 33. Where good means have been employed for injecting petroleum with a proper supply of air against fire brick in marine furnaces, there were found a reduction of 40 per cent. in weight of fuel carried, and 36 per cent. in bulk, and 75 per cent. in labour. There is prompt lighting and extinguishing of the fire, and great ease of regulation and perfect combustion, with less excess air than when coal is used. There is greater cost of fuel.

Air passed over the surface of the **lighter oils** (with low flashing points, and therefore dangerous) takes up sufficient vapour to become explosive, and this mixture is used in some engines. The law makes it troublesome now to carry such oils. **Oil gas** may be made from the ordinary petroleums, and used in gas engines. A good oil engine mixes its supply of oil with air, explodes it with perfect combustion, and utilises its energy without there being any tarry deposit left to clog the valves. Properties of oils important in oil engines are described in Art. 280.

The buttery-looking crude **residue left** after extracting oil from shale will not burn on applying a light. When melted and forced in jets with superheated steam and air against fire-clay furnace sides, it burns well.

258. Gaseous fuel is easily conveyed by pipes; there may be great economy and higher temperature in its combustion than with a solid fuel, not much more air being supplied than what is just necessary; there is no dust, no cinder, no ash. **Coal gas** manufactured for lighting purposes is also employed in gas engines. Coal for gas-making is expensive, gives off about 30 per cent. of volatile stuff, which yields about 5 cubic feet of gas per lb., leaving about 70 per cent. of coke.

Water gas is produced by alternately passing air up through a

thick fire to make the coke white hot, and then passing up steam. The H_2O in presence of hot carbon becomes H_2 and CO. Some forms of water-gas are good in boiler and metallurgical furnaces, but contain enough tar to clog the valves of a gas engine. **Dowson's gas** seems to contain more of the heating power of the fuel (it must be anthracite or coke, else the tarry products give trouble) than any other. A fire more than 18 inches thick is maintained in a fire-brick lined furnace. Fuel is admitted through a hopper and valve. There is a little boiler producing superheated steam, which blows by a nozzle into a closed ashpit, carrying air with it. The action is continuous. The oxygen of the air combines with carbon to form CO_2. The CO_2 dissociates as it rises in the fire into CO and O; this oxygen later combines with more C. Again the H_2O in presence of white hot C becomes H_2 and CO_2, and some of the CO_2 dissociates as before. Coming from the top surface of the fuel we have H and CO, and some CO_2 with nitrogen, also we find ashy dust and tarry matters. The gases are cooled and passed through water spray and wet coke into a gas holder, and drawn off for use in gas engines or to be burnt in furnaces.

Natural gas is found in districts where oil is found; it rises from a depth of 500 to 2,000 feet, and at the surface has a pressure of from 150 to 200 lb. per square inch, being at first at 1,000 lb. per square inch. Calorific power 14,000 to 15,600 per pound. It is found that 1,000 cubic feet of gas is equal to from 80 to 133 lb. of coal in boiler heating power. These gas wells are rapidly getting exhausted, as is shown by the great diminution of pressure.

CHAPTER XXVI

THE EFFICIENCY OF A BOILER

259. THE most important of steam engine processes are the giving of heat to water in the **boiler**, and the taking of heat from water (steam) in the **condenser**. In an exceedingly good engine we may say that we give energy represented by the number 10 in the boiler, take away 9 in the condenser, converting 1 into indicated work.

Our greatest trouble is in the boiler. The fuel is white hot, and **radiates heat** very rapidly to the fire box. In a marine boiler or stationary boiler about half the total heat reaches the water through the sides of the fire box. But if the fire on the grate is made thicker, as it is in a locomotive boiler or in a marine boiler under forced draught, it radiates only a little more per square foot of grate, because its exposed surface and temperature are not much increased by mere thickness, and consequently only about a quarter, or even less, of the total heat reaches the water through the fire box. We may take it that the fire box part of the heating surface is very much more efficient per unit area than the flue part, and this is one reason why the Thornycroft boilers are so efficient. But if in a particular boiler we burn twice as much more fuel in the hour, although the flues will give more than twice as much heat to the water, the fire box will increase its supply only a little. And here we have a very curious property of flues which ought to be well studied. Whether a tube is made of copper or iron or brass, is of no consequence, except as to convenience and oxidation by the flame. The real resistance to the passage of heat is not due to the bad conductivity of the metal; it is due to the fact that the particles of hot gases will not come up fast enough to the surface to get cooled, and the particles of water will not come up fast enough on the other side to get heated. See Art. 377.

EXERCISE 1. If the average difference of temperature between flue gases and boiler water is 500 Fahrenheit degrees; assume that a $\frac{3}{8}$-inch metal plate has this temperature difference between its sides, what heat passes per hour? Express the heat in evaporation units.

Answer. Taking the conductivity k of copper as ·004, and of iron as ·00088 in inch second pound units, the heat per square foot per second is $144 \times 500\, k \div \frac{3}{8}$. In evaporation per hour it is $144 \times 1333\, k \times 60 \times 60 \div 966$ or $7{\cdot}16 \times 10^5\, k$, and is 2864 lbs. in the case of copper, 630 lbs. in the case of iron.

EXERCISE 2. The largest result from an actual boiler is seen in the table, page 426, to be 10 lbs. of evaporation per square foot of heating surface per hour, what fraction of the total resistance to the passage of heat is made up of mere resistance of the metal?

Answer. 0·016 in the case of iron, 0·0035 in the case of copper.

260. Given water and steam at a certain temperature and hot furnace gases at a very much greater temperature; to get the heat from the one to the other quickly and without too great an extent of heating surface. **This is the problem** to be solved by boiler makers. There is a plate of metal through which the heat has to pass. The resistance to the heat passing seems to be very greatly at the two surfaces. The actual thickness of metal (if less than $\frac{5}{8}$-inch thick), and even the nature of the metal (that is, whether it is copper or whether it is iron or brass), do not seem to matter very much. If we sometimes object to iron tubes being used, it is not because iron is a much worse conductor of heat than copper; it is because the iron suffers more from the flame. What makes a good deal of difference is this: gases and liquids give up or take up heat by convection. They are really bad conductors of heat. The student ought to hang a red hot ball in water near its surface, and he will find that although the surface water boils, a thermometer placed an inch below does not show any rise of temperature. Watch a flask of water heating over a Bunsen burner; throw in some fine solid particles, say of potato, to look at, and note how the hot water rises and the cold water replaces it.

We want the surfaces of the metal wall to be scrubbed, the one with hot gases and the other with circulating water, and the student who pays most attention to simple experiments on convection is most likely to invent the best boiler.

We have much the same problem in getting heat away from the steam in a surface condenser. Joule, who studied convection, was able to condense 100 lbs. of steam per hour per square foot of surface. Practical engineers are happy if they get one-twentieth of Joule's

performance. He let cold water in a tube surround steam in a concentric tube; they flowed in opposite directions. Probably the best boiler will be one in which a flame or hot gas tube surrounds or is surrounded by a water tube, the gas and water flowing fast in opposite directions.

In Fig. 198 I show a vertical boiler with vertical *Field* tubes (Fig. 201) filled with water surrounded by flame. If these were ordinary tubes, the water in them would get red hot and would occasionally burst out with violence, and this would form one of the very worst possible contrivances for heating water. In truth, however, there is an inner tube, fixed as shown in Fig. 201, so that hot water rises in the outside space and cold water comes down the central tube, the circulation being very rapid. Till Thornycroft invented his boiler, this was the most expeditious contrivance for heating water.

261. I have examined a great number of experimental results from boilers. Many of them are troublesome to deal with, because fuels and states of metal surfaces differ. Draught is not always specified. The student ought carefully to study the following results. Mr. Donkin's book has just been published, in which he describes all the experiments on boilers which a student is likely to find time to study. The information in the table on the following page is from an older publication.

It will be noticed that with all good types of boiler, working at their best, we find that we seldom have less than $9\frac{1}{2}$ lbs. of steam (Standard) per pound of fuel and seldom more than 13, although the rate varies from 9 lbs. of steam per square foot of heating surface to $1\frac{1}{4}$, and the fuel per square foot of grate varies from 60 to 8.

We have seen, Art. 250, that the total evaporative power of a Welsh coal may be taken as 16·47. In the following, I know that Mr. Donkin rejects of this 0·37, because of latent heat of the hygroscopic and formed steam. I think he has no more right to do this than to reject other losses of heat which are absolutely certain in all boilers; however, let us take 16·1. The efficiency 75 per cent. in the following table means that 16·1 × 0·75 lb. of *Standard* evaporation is produced per pound of coal.

Mr. Donkin gives the following summary of 405 boiler tests arranged in order of merit.

I said, in Art. 134 that the boilers in the London electric supply stations produce, almost without exception, on an average, $8\frac{1}{2}$ lbs. of steam per pound of coal. They may be taken as steam of 165 lbs. per square inch from feed water at 100° F. It is easy to show that

Boiler Experiments by Donkin and Kennedy, 1887—89.

	Vertical tubular internal firebox.	Lancashire conical tubes across each flue.		Locomotive type, wet firebox, and with large tubes.		Water tube, old system.		Three Cornish boilers, Galloway tubes.	Lancashire boilers with Galloway tubes in each flue.	Green's economiser and Vicker's Mechanical stokers	Portable boilers, locomotive type.	Elephant, Green's economiser, latter generally used with 2 boilers.	Steel locomotive boilers on tank goods engine with copper firebox.			Merryweather's pat. fire-engine, vert. multitubular.	Cornish multitubular.	Portable boiler, locomotive type.	Cornish, Galloway tubes.	Cornish, multitubular corrugated flue.	Locomotive (stationary).	
													not running.	running.	running							
Heating surface (square feet) { Boiler alone	771	582	582	228	228	470·5	470·5	2100	936	936	316	430	859	859	859	120	191·5	285	324	804	1177	1
{ Economiser	0	0	0	0	0	470·5	470·5	0	1142	1142	0	1033	0	0	0	0	0	0	0	0	0	2
Total heating surface (sq. ft.)	771	582	582	228	228	941	941	2100	2078	2078	316	1463	859	859	859	120	191·5	285	324	804	1177	3
Area of fire grate (sq. ft.)	10·5	15	15	10·5	7·4	14·95	14·95	63	21	21	9·68	19·15	12·4	12·4	12·4	5·76	3·55	10·5	16·75	20	21·48	4
Mean steam pressure (absolute)	49·7	64·7	71·7	14·9	99·9	100·6	90·2	51·7	93·8	92·7	75·7	60·2	145	133·7	139·7	115	79·2	86·7	66·3	88·7	104·7	5
Feed temperature (Fah.)	42·6	48·6	71·1	42	86	49	49·3	116·2	83·5	86·8	56·3	65·3	56·5	50·7	52	52	58·7	60	96·1	47·5	50·2	6
Total feed water per hour (lb.)	1505	1277	2369	676	335	2026	2013	4401	3552	3760	1087	2100	4454	3620	4000	1310	444	920	2104	4020	7098	7
Total coal per hour (lb.)	188	154	278	83	46	214	220	432	336	352	120	211·5	441	348	393	197·6	48	114	262	429	801	8
Thickness of fires (inches)	13 to 15	8·5	6	5 to 6	—	3·5	3·5	9 to 12	10 to 12	—	4·5	—	5 to 6	4 to 5	—	—	4	—	8	3 to 4	2½	9
Number of times each fire stoked per hour	2·1	1·2	2·75	0·88	—	12	12	0·7	contin	uous.	3·73	8·0	3	5	5·3	—	2·2	—	—	6	8	10
Temp. (Fah.) of furnace gases at or near base of chimney	392	399	630	560	555	329	324	485	372	278	625	264	—	570	617	—	498	575	533	732	-	11
Temp. (Fah.) of gases between boiler and economiser	—	—	—	—	—	646	626	—	566	401	—	—	—	—	—	—	—	—	—	-	-	12
Ratio of air used to air theoretically required	1·58	2·4	1·63	2·61	4·28	282	2·76	1·98	3·6	—	1·81	2·02	1·56	2·05	—	—	2·8	—	2·67	1·50		13
f=lb. of coal per sq. ft. of grate per hour	17·9	10·2	18·5	7·93	6·25	14·3	14·7	6·86	16	16·8	12·4	11·0	35·5	28·1	31·7	34·3	13·7	10·8	15·7	21·5	25·5	14
lb. of coal per sq. ft. heating surface (boiler only)	0·24	0·27	0·48	·34	·20	·46	·47	·21	·36	·38	·38	·49	·51	·42	·46	1·65	·25	0·4	·81	·53	·68	15
Evaporation per lb. of coal (as from 212° F.)	9·57	9·92	10·02	9·55	8·45	9·9	9·53	11·4	10·82	11·18	10·78	10·05	12·18	12·51	12·29	7·95	9·91	9·57	9·16	10·15	10·64	16
Percentage heat usefully spent	62·5	69·0	66·3	64·9	55·7	{ 72·6 / 58·9	70 / 58·7	— / 76·6	79·7 / 68	79·2 / 69·7	— / 68·3	76·8 / 64	These values where economiser is included. 78·8	80·7	79·5	50	61·3	63·9	60·5	64·8	71·5	17
Percentage heat escaping in furnace gases	11·4	15·6	18·2	24·5	33·8	15·8	15·3	16 0	21·3	—	20·0	8·5	17·9	20·6	22·0	—	22·7	—	22·4	20	-	18
Percentage radiation	4·4	6·9	5·9	5·1	9·2	6·4	6·2	4·3	7·1	—	5·6	5·4	3·0	3·9	3·4	—	8·0	—	—	7·0	3·6	19
Percentage lost by imperfect combustion	12·4	0·0	1·2	0	0	2·3	0·8	1·7	0	—	1·2	0	4·8	0	0	—	—	—	0	1·6	- -	20
Percentage heat unaccounted for	9·3	8·5	9·4	5·5	1·3	2·9	7·7	1·4	*-8*	20·8	4·9	9·3	*-4·5*	*-5·2*	*-4·9*	—	8	—	17·1	6·2	24·9	21
Percentage loss by gases if boiler were perfect	6	6·4	6·5	5	7	7	6·8	6	6·9	6·9	6·5	6·3	7·5	7·4	7·4	7·2	6·6	6·8	6·4	6·8	7	22

Notes.—Items 1 *to* 15 copied entire from Donkin and Kennedy; 16 gives the *lesser* of two sets of values from Donkin and Kennedy, their higher value for coal "pure and dry" being about 10 per cent. better; 17 to 20, Donkin and Kennedy corrected, for the fact of their having taken 16·1 *instead of* 16·47 as the possible evaporation of one pound of coal; 21 gives balance to complete 100 where it is entered in *italics*; loss is apparently negative and probably accounted for by priming; 22 calculated as in Art. 250.

this means an *average* efficiency under very varying load, and resting with banked up fires, of 61 per cent.

Type.	Stoking.	No. of experiments made.	Mean efficiency of two best experiments on each type per cent.	Lowest efficiency of each type, one experiment only.	Mean efficiency of all the experiments.
Water tube (1½-inch tubes)	hand	6	84·1	66·6	77·4
Locomotive	,,	37	83·3	53·7	72·5
Lancashire (2 flue)	,,	10	74·4	65·6	72·0
Two storey	,,	9	76·1	57·6	70·3
,, ,,	hand and machine	29	79·8	55·9	69·2
Dry back	hand	24	75·7	64·7	69·2
Return smoke tube	,,	11	81·2	56·6	68·7
Cornish	,,	25	81·7	53·0	68·0
,,	,,	9	81·0	55·0	67·7
Wet back	,,	6	69·6	62·0	66·0
Elephant	,,	7	70·8	58·9	65·3
Water tube (4 inch tubes)	,,	49	77·5	50·0	64·9
Lancashire (2 flues)	machine	40	73·0	51·9	64·2
Cornish	hand	3	65·9	60·0	62·7
Lancashire (2 flues)	,,	107	79·5	42·1	62·4
Dry back	,,	6	73·4	54·8	61·0
Lancashire (3 flues)	,,	6	66·7	52·0	59·4
Elephant	hand and machine	8	65·5	54·9	58·5
Lancashire (2 flues)	hand	8	74·3	45·9	57·3
Vertical	,,	5	76·5	44·2	56·2

262. A Working Theory. On the whole, the following principles seem sufficiently well established to be worth the consideration of men who design boilers.

In a fire-box, the grate area of which is G square feet, when F lb. of fuel are burning per hour, the evaporation is roughly represented by $bG + cF$, where b and c are greater as the ratio of the area of the fire-box surface above the grate exposed to radiation to the grate area is increased; b and c are diminished by admitting more air per pound of fuel than is necessary. For both these reasons b and c are greater in a locomotive than in a Lancashire boiler.

A more complicated formula [1] may easily be framed to suit better

[1] I have sometimes used the following:—The evaporation from the fire-box is

$$\frac{aF}{bF+1} \text{ or } \frac{aF}{b^1f+1}$$

Where b is $\frac{A}{45H}$, or b^1 is $A \div 45k$, A being pounds of air per pound of fuel, H being the surface of the fire-box which may receive heat by radiation, f being fuel per hour per square foot of grate, and k being radiation surface per square foot of grate. Probably this is a better formula in some cases, but applied to the French locomotive boiler, Art. 264, b is very far from being a constant.

the notions which have been given us by our knowledge of combustion, but we are looking only for a general formula which shall be fairly correct within the ordinary limits, and which shall lend itself to easy algebraic work, and this one will do.

If the evaporation per pound of fuel when perfectly burned in a coal tester, is a lb. If $a - \alpha$ represents the loss of heat per pound of fuel, because more than the exactly right amount of air is admitted, and because there is not a sufficiently large and well arranged combustion chamber; because of hot ashes, &c.; the available heat is represented by α and not a. Thus, when there is natural draught, and especially when the fire is thin, the fuel is not scrubbed with air sufficiently, unless we admit twice the absolutely necessary amount; we saw in Art. 247 that much of the value of the fuel was lost. When there is such poor draught and such a small combustion chamber that $\frac{3}{4}$ths of the hydrocarbons go off unconsumed, we saw that much more of the value of the fuel is lost. In fact, we may say, that by bad or good stoking, bad or good size of combustion chamber, bad or good draught, α may be anything from ·95 to ·60 of a.

The total available evaporation is then αF, and if we effect the amount $bG + cF$ in the furnace, there remains $\alpha F - (bG + cF)$ or $(\alpha - c)F - bG$ to be dealt with **in the flues**. Now it seems that the efficiency of a flue may very well be represented by

$$e = 1/(1 + \mu/l)$$

where l is the average length of the flues and μ is proportional to the hydraulic mean depth of the flue on the flame side, and also to the hydraulic mean depth or badness of circulation on the water side. (See Chap. XXXIII.)

The **hydraulic mean depth** on the flame side of a straight tube of any kind of uniform section is the area of its section divided by perimeter touched by the flame or gases. The hydraulic mean depth or badness of circulation on the water side is not easy to specify exactly in mathematical language, but is quite easy to understand; it is greatly diminished by artificial stirring. The efficiency of a flue is greatly diminished by the deposition of soot on the gas side, or by deposition from the water on the other side, and either of these may be said to increase μ. When the flue is not a mere straight tube, the hydraulic mean depth may be said to be diminished by all obstructions which are such that the hot gases are made to impinge on heating surface. It is not altogether

correct, and yet is nearly correct to say that anything which increases friction in a flue bounded by heating surface, increases efficiency. A feed-water heater may either be taken as increasing l or diminishing μ. The gases give their heat to the metal because they are hotter than the metal, and because they are in turbulent motion, which continually replaces the cooled layers close to the metal with fresh, hot stuff. I have worked out a rough theory of how the heat is given up, and it is given in Chap. XXXIII. It suggests that when fluid friction is quadrupled, the rate of giving up of heat is doubled.

We find in Art. 259 that the resistance to the passage of heat from gases to water is usually about 300 times as great as the mere resistance of a copper tube $\frac{3}{8}$ inch thick. I have found by experiment that the temperature of a cooling ball of stone close to its surface remains for a long time very much higher than the cold water which violently scrubs the surface, and this curious phenomenon must be greatly exaggerated in the difference in temperature between gases in a flue and the metal of the flue. Men who write elaborate treatises on steam boilers, will quote Isherwood's experiments, which showed that the heat passing through flues $\frac{1}{8}$, $\frac{1}{4}$, and $\frac{3}{8}''$ thick was practically the same, so that it did not depend to any appreciable extent upon the thickness of the metal, and yet they will also, to the confusion of a thoughtful reader, dilate somewhere else upon the importance of doubling evaporation by halving the thickness of the tubes.

It is usual to speak of the heating surface S of a boiler, counting as heating surface the total surface of metal which is touched by the hot gases. In boilers, the evaporation ranges from $1\frac{1}{4}$ to 9 lbs. of steam per hour per square foot of heating surface, and from 100 to 1000 lbs. per hour per square foot of grate. I consider that almost nothing has retarded improvement in boilers so much as such statements about area of heating surface. In many experiments on multitubular boilers when half the tubes have been closed up, the boiler was found to be just about as efficient as before.

We cannot expect to have the same efficiency of a flue for very great differences in the amounts of gas passing. If this were so, the efficiency of a set of tubes would depend only on their length and diameter, and not on the number of them. But it is interesting to notice that within certain limits there is no great loss of efficiency in plugging up half the tubes. Thus, for example, the

efficiency of the Wigan boiler[1] was tested. Every alternate diagonal row of tubes was plugged and the heating surface was thus reduced by 206 square feet.

	All tubes open.	Half of tubes closed.
lb. of coal per sq. ft. of grate per hour .	25	24
Evaporation per lb. of coal	12·4	12·2
Very light smoke, duration in minutes per hour	2·8	8·0

So that with about twice the velocity of gases in a tube, we have about twice as much evaporation from the tube.

263. The subject is so important that I will describe here some famous **experiments made in France** upon a locomotive boiler, about twenty years ago. Grate area 9 square feet; 125 tubes 148 inches long, $1\frac{7}{8}$ inches inside diameter. The boiler was divided into five sections, the tubes running through, but the sections kept distinct. Each length of the barrel was 3 feet long, there being $3\frac{1}{2}$ inches of tubes attached to what is called the fire-box section. The draught was produced in the chimney by a blast of steam from another boiler. There seems to be pretty much the same evaporative power in 1 lb. of coke as in 1 lb. of briquettes, and I usually take it that 1 lb. of fairly dry coke has a total evaporative power of 14 lbs. Now, in the experimental boiler the pressure was 80 lbs. per square inch, the feed-water was probably at 62° F.; this needs 1149 units per lb. as against 966 units, which is the standard of evaporation. That is, we may take the evaporation of 1 lb. in the table as equivalent to 1·2 lb. as from and at 212° F. Hence, of the evaporation in the table, 1 lb. of coke would produce a total evaporation of 11·76 lbs. This is reduced because of the moisture in the coke.

Also, neglecting the fact that possibly more than 50 per cent. excess air was admitted, we have probably 18 lbs. of gases of specific heat about 0·25; the most perfect flues cannot reduce these gases to a lower temperature than 320° F., that of the water, and so we must deduct 18 × 260 × 0·25 or 1170 units of heat. This reduces the total available evaporation to 10·88 lb. It is not unreasonable to

[1] *The Steam Engine*, by D. K. Clark, in four volumes, p. 114. I shall often refer to this book in the following pages.

imagine that 1·0 per cent. of the whole evaporative power or 1·18 lb. is absent on account of incomplete combustion, because this is quite usual even with good stoking, and we arrive at 9·7 lbs. as the most probable total available evaporation of 1 lb. of the fuel. My students have tried and we have seen that whether we take 11, or 10, or 9, there is no great difference in the following deductions.

The observations reduced to English units are given in the table. The evaporations are in pounds per hour.

Draught-inches of water.		Fuel in pounds per hour.	Evaporation from firebox, E_0.	Evaporation from first section of flue, E_1.	Evaporation from second section of flue, E_2.	Evaporation from third section of flue, E_3.	Evaporation from fourth section of flue, E_4.	Total evaporation of boiler.	Water evaporated per pound of fuel.
			lbs.	lbs.	lbs.	lbs.	lbs.	lbs.	lbs.
Coke	·79	436·5	1530	996	430	228	128	3312	7·59
	1·57	654·7	2018	1408	671	380	231	4708	7·19
	2·36	727·5	2222	1789	931	528	337	5806	7·98
	3·15	793·7	2229	1921	997	572	396	6115	7·71
	3·94	771·6	1810	1892	1030	614	484	5786	7·50
Briquettes	·79	476·2	1806	964	445	240	147	3602	7·56
	1·57	743·0	2356	1368	735	387	264	5110	6·88
	2·36	923·7	2933	1969	1025	645	425	6997	7·58
	3·15	1025·0	3291	1778	920	579	422	6990	6·82
	3·94	978·8	2981	2499	1228	774	502	7984	8·16
Briquettes. Half the tubes closed by plugs at fire-box end.	·79	388·0	1811	803	356	191	117	3278	8·45
	1·57	610·7	2057	1138	550	308	187	4240	6·94
	2·36	707·7	2710	1448	722	449	290	5619	7·94
	3·15	793·6	2979	1624	845	475	334	6252	7·88
	3·94	848·8	3058	1874	948	580	425	6886	8·11

264. EXERCISE 1. Plot E_0 (the evaporation **from the fire-box**) and F (lb. of fuel) on squared paper, and see if you obtain some such rules as these—

$$E_0 = 700 + 2\ F, \text{ Coke,}$$
$$E_0 = 700 + 2{\cdot}4\ F, \text{ Briquettes,}$$
$$E_0 = 700 + 2{\cdot}8\ F, \text{ Briquettes with half the tubes plugged up.}$$

We shall now consider **the flue part.**

In whatever way I have manipulated the figures of these famous tests, and I have done this in many ways at many times, I have always found the fifth set for briquettes abnormal, and I think the reason lies in the tests not having lasted long enough. As a matter of fact, however, it is evident that there are no discrepancies from constancy

in ϵ_4, the efficiency of the flues of the next table, which may not be due to errors of measurement. It is interesting to notice that there was actually a greater flue efficiency when half the tubes were plugged up. I make it out to be ·612 when all the tubes were open, and ·655 when half were plugged up, the mean being ·634. If we reject the fifth test with briquettes, as I have always been greatly inclined to do, there is even a greater increased efficiency due to plugging up the tubes.

EXERCISE. If 10 is the greatest possible evaporation per pound of fuel, $10\ F - E_0$ is the heat entering the first section of the flue; $10F - E_0 - E_1$ is the heat entering the second section of the flue, and so on. If we divide the evaporation in a part of the flue by the heat entering it, we get its efficiency. I have calculated e_1, e_2, e_3, e_4, the efficiencies of the four flue parts. Also I have calculated ϵ_1, ϵ_2, ϵ_3, ϵ_4, where, for example, ϵ_3 means the efficiency of the first three sections taken together, and ϵ_4, the efficiency of the whole of the flue part.

It is to be noticed with briquettes that, whether we take the boiler as a whole or any portion of the flue part, the efficiency was actually greater when half the tubes were closed up. Notice that in any of the three sets, the flues, or any section of them, has about the same efficiency, whether there is much or little fuel being burnt.

FLUE EFFICIENCIES.

Fuel, lb. per hour.	e_1	e_2	e_3	e_4	ϵ_1	ϵ_2	ϵ_3	ϵ_4
Coke 436·5	·351	·234	·162	·108	·351	·502	·582	·630
654·7	·311	·215	·155	·112	·311	·459	·542	·593
727·5	·354	·286	·226	·187	·354	·539	·642	·708
793·7	·336	·263	·205	·178	·336	·510	·610	·680
771·6	·320	·256	·206	·204	·320	·493	·600	·680
Means	·334	·251	·191	·158	·334	·501	·595	·658
Briquettes 476·2	·326	·223	·154	·112	·326	·476	·558	·606
743·0	·270	·198	·132	·103	·270	·418	·495	·548
923·7	·311	·236	·195	·160	·311	·475	·578	·644
1025·0	·255	·177	·136	·114	·255	·387	·470	·531
978·8	·368	·284	·252	·217	·368	·547	·661	·731
Mean	·306	·224	·174	·141	·306	·461	·552	·612
Mean of first four	·290	·208	·179	·122	·290	·439	·525	·580
Briquettes Half the tubes closed by plugs at firebox end. 388·0	·389	·281	·210	·163	·389	·560	·650	·708
610·7	·281	·188	·130	·091	·281	·417	·494	·539
707·7	·332	·247	·205	·117	·332	·495	·598	·665
793·6	·326	·254	·190	·164	·326	·497	·592	·661
848·8	·344	·266	·222	·191	·344	·519	·625	·702
Means	·334	·247	·191	·145	·334	·498	·592	·655

Now in the first and second series of tests each section consists of 125 tubes, $1\frac{7}{8}$ inch internal diameter, 3 feet long; taking dimensions in feet, the hydraulic mean depth m of a tube (and therefore of any number of tubes) being sectional area ÷ perimeter, is ·039 feet. We find that the above averages for briquettes, all the tubes being in use, satisfy very well the law for flues made of round tubes

$$e = \frac{\cdot 87\, l}{153\, m + l}$$

For coke with all the tubes, and for briquettes when half the tubes are closed, it is very strange but we find that the results agree with wonderful exactness giving the rule—

$$e = \frac{\cdot 97\, l}{145\, m + l}$$

We must then in no case depend upon the area of heating surface; but we take it that without great error we may assume that there is much the same fraction of their total heat taken from the gases by a flue, however quickly they run through, and that the efficiency of the flues is—

$$e = \frac{l}{hm + l} \quad . \quad . \quad . \quad (1)$$

where l is the length of a tube and m its hydraulic mean depth or $\frac{1}{4}$ of its diameter, and h is a constant, which is less as the circulation of water is better. We may in general take h to be 150 with the sort of circulation of water common in locomotives.

265. Of the total evaporative power aF, the furnace takes the amount $bG + cF$; and the amount $aF - (bG + cF)$ enters the flues. The total evaporation W is therefore made up of

$$bG + cF, \text{ and } e\left\{(a - c)\ F - bG.\right\}$$

We take a equal to about 0·9 of the real evaporative power of the fuel after we have subtracted the energy which the gases would still have if they were reduced to the temperature of the water in the boiler. Also we must have deducted something for want of perfect combustion. Even if there is absolutely no smoke there is probably 10 per cent. to deduct; black smoke means a reduction by another 17 per cent. Thus a will depend upon the character of the fuel, size of combustion chamber, &c. b and c depend upon the area exposed to radiation per sq. foot of grate, and to a small extent on the character of the fuel. and the amount of air admitted. It is to be noticed that

when the size of grate is altered without altering anything else, we really alter the values of b and c, and to some extent a also, because we increase radiation surface and volume of combustion chamber per square foot of grate. We have arrived at the result

$$W = b(1-c)G + \left\{ c + (a-c)e \right\} F \quad . \quad . \quad . \quad (2)$$

If now l/hm be called λ, a term proportional to the length divided by diameter of tubes and greater as there is better circulation of water,

$$W = \frac{bG}{1+\lambda} + \frac{c+a\lambda}{1+\lambda} F \quad . \quad . \quad . \quad . \quad . \quad (3)$$

I shall usually write this

$$W = AG + BF \quad . \quad . \quad . \quad . \quad . \quad . \quad (4)$$

Where A and B are constants of much the same value in good specimens of any class of boiler.

Or I may use w for W/F, the evaporation per pound of fuel, and f for F/G, the fuel per square foot of grate, and so have

$$w = \frac{A}{f} + B \quad . \quad . \quad . \quad . \quad . \quad . \quad . \quad (5)$$

When there is as good circulation on the water side as in a locomotive boiler in motion (the motion helps circulation), we may take λ as the length of one of the tubes divided by forty times its diameter.[1]

266. My roughly correct speculations are such as befit the subject. They have led to an expression, (3) or (6), of some value. Those who only *use* boilers will probably be satisfied with the expression

$$W = AG + BF$$

W being total evaporation as from and at 212° F., and G = area of grate in square feet, F = lb. of fuel per hour, and A and B are nearly constant for a particular boiler. If the boiler has very long

[1] We ought to use the formula of the note, page 427, in any case where we know that the air supplied per pound of fuel is constant. Instead of (3) above we have

$$W = aF\left(1 - \frac{\lambda}{1+\lambda}\,\frac{bF}{1+bF}\right) \quad . \quad . \quad . \quad . \quad . \quad (6)$$

This may be written $W = aF\,\dfrac{1+cF}{1+bF}$ where c is a constant whose value is $b/(1+\lambda)$. In using (3) or (6) it is to be remembered that b is nearly of the value $A/45H$ (see note, page 427) and λ is length of a tube divided by about 40 times its diameter.

narrow flues the term A is small; for example, in the **French locomotive boiler** of Art. 263 I find that

$$W = 9{\cdot}1F$$

satisfies all the observations better than any other simple formula; furthermore, I find that whether coke was used or briquettes, and whether or not half the tubes were closed we have much the same law; the errors in assuming this law to be true are very much of the same order as the discrepancies in the actual measurements that were made.

Again in the experiments made with the famous **Newcastle marine boiler** in 1857, the grate was altered from 22 square feet to 15½ square feet, and the firing from 3⅓ cwt. on the larger grate to 5·18 on the smaller. The heating surface was 749 square feet of furnace and flues, together with a feed-water heater of 320 square feet. There was nearly perfect combustion. The results when using the feed-water heater agree with

$$W = 34G + 9{\cdot}74F.$$

When not using the feed-water heater the results (not over so great a range) agree with

$$W = 70G + 7{\cdot}48F.$$

This is the way in which we expect poorer efficiency of flues to affect the formula; diminishing B and increasing A.

In Mr. Isherwood's experiments described in Mr. D. K. Clark's book the curious results obtained are easily explainable if one remembers the significance of the various terms of (3) or (6). For example, how when we diminish grate area, we really increase radiation surface and combustion chamber volume per square foot of grate. In his first series where $G = 10{\cdot}8$, and the heating surface S was 150·3, his results satisfy

$$W = 18{\cdot}5G + 5{\cdot}65F.$$

Mr. Isherwood, like many other people, noticed the uncertainty as to the effect of S. We know now that it is length of flue divided by hydraulic mean depth and circulation of water that are important and not S. Readers of Mr. Clark's book about this place will notice in the trials of **feed-heaters** (table, page 283) how they may produce an increase of efficiency of as much as 15·7 per cent. In practice it is from 15 to 20 per cent., but this would probably not be so great if machine stoking and automatic regulation of the draught were employed. Clean tubes give 6 per cent. more efficiency than dirty tubes.

At page 299 of Mr. Clark's book we may notice what a great amount of unconsumed gas escapes even in the best hand stoking trials, and in page 300 that the supply of air which gave the best results with careful stoking of a French boiler was only about 33 per cent. in excess of what was absolutely necessary.

The table of page 302 (Clark) is worth study, it shows 61 per cent. of the total heat going into the water, the unconsumed gases taking 5·5 per cent.; clinker and ash 1·5 per cent.; heat in gases taking off 5·5 per cent.; smoke and carbon 0·5 per cent. The hygrometric and formed water took 2·5 per cent., and the heat carried off by the brick work was 23·5 per cent. of the whole. These numbers ought to be compared with those of the table, Art 261.

It is worth while considering the trial at page 308 of Mr. Clark's book of what is now an out-of-date boiler—a locomotive boiler once used by Thornycroft in torpedo boats. There is neither sufficient radiation surface nor combustion chamber space above the grate. The gauge pressure was 117 lbs. per square inch, feed 55° F.

Air pressure in stokehole (inches)	2	3	4	6
F = coal per hour (lbs.)	925	1177	1472	1815
f = ,, ,, per square foot grate	49	62	78	96
W = steam per hour (lbs.)	6530	7770	9320	10840
w = evaporation units per pound of coal	8·31	7·81	7·45	7·03

Here it will be found that

$$w = \frac{122}{f} + 5{\cdot}86$$

or

$$W = 122G + 5{\cdot}86F$$

267. The average results of experiments from the best boilers of the following types are pretty much the same. Assuming that there is proper provision for mixing air with the gases at a high enough temperature; that the provision for draught is more than is actually needed, so that the stoker has perfect control of it (a condition which is far too often neglected); then the fuel being any kind of good coal, either Welsh (whose superiority really consists in behaving well even when the stoking is bad and giving little trouble), or Newcastle, or Lancashire, or Derbyshire, or a mixture of Welsh with any of these, we find

$$w = \frac{A}{f} + 8{\cdot}5$$

if w is the evaporation in pounds of water as from and at 212° F.

per pound of coal. f is the fuel per hour per square foot of grate. The values of A are as follows:

	A	limits of f.
Lancashire with Galloway tubes, French or other good stationary boilers with feed-water heaters	36	30 and 8
Marine cylindric with return tubes . .	54	40 and 12
Railway locomotive	135	140 and 30
Water tube	45	100 and 10

268. I have long used **another empirical formula**, which is convenient. W is the total evaporation per hour as from and at 212° F. F is fuel per hour, G is grate area, λ is length of flue divided by its hydraulic mean depth. a, b, and c are constants. a is about $13\frac{1}{2}$ for any good Welsh coal, or indeed any other bituminous coal, if the stoking is good; but if the stoking is not very good, we may still use $13\frac{1}{2}$ for Welsh, but smaller values for other coals. b is a number which is less as there is a better arrangement for water circulation; c is a number which is less as there is more surface to receive radiation in the fire-box.

$$W = \frac{aF}{1 + bF/\lambda + cF/G}$$

My students have obtained values of b and c for many types of boiler. On the whole, perhaps, the extra complication is not atoned for by so much greater accuracy but what it is better to keep to the simpler form.

269. New Type of Boiler. Fig. 234 is a diagrammatic sketch of a boiler made really to enable my students to keep our theory in mind. Ever since it was first drawn some years ago I have seen that structural alterations are necessary—but these would suggest themselves to a practical engineer; for example, dust from the fire ought to be allowed to settle in such a way as to allow of frequent removal, so that the passage from F ought to be above and the flow of hot gases through the tubes be a downward flow. There is no giving up of heat by gases until after combustion is complete. B is a fire-brick furnace strongly cased. Coal is fed in, preferably automatically, at A_1; the whole space C is filled with fuel, which is white hot at C_1; the ashes are raked from A_2. Air is sucked in at A_1 and at A_2, and it is easy to see that the combustion may be perfect in the chamber F

from which the flame passes through the tubes T to the uptake U. The draught may be produced in U, or preferably by a fan driving air in at A_1 and A_2. The draught required is very great, as the copper tubes T are only about ¼ inch in diameter. These tubes are packed (not quite touching) in a cylindric vessel D, the spaces between them being filled with water, which is kept in rapid circulation by the

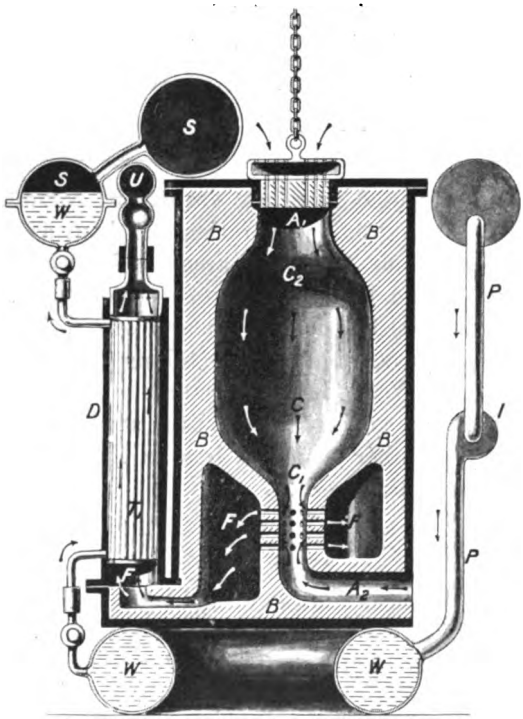

FIG. 34.

injector I, although a pump may be used instead, to drive water from the upper ring pipe W to the lower one by P and back again by the tubes. I think it a mistake to have the water circulating often; it ought to scrub the tubes so much in passing once through D as to become all steam in the upper part of D, or rather in the ring pipe WS, which communicates with the steam pipe S. There are a number of cases, D, any one of which is easily detachable and the tubes are frequently cleaned inside and out. Instead of cylindric cases, D, every flue tube may be concentric with a water tube, and it is easy to make them detachable in large or small groups for cleaning purposes.

CHAPTER XXVII

GAS AND OIL ENGINES

270. AIR would be almost the best stuff to use in a heat engine only that it is so difficult to give it heat and to take heat from it as suggested by the Carnot and other cycles. This difficulty has caused the want of success of all the **ingenious air engines** which were invented 50 years ago, except perhaps for very small powers. Gas and oil engines may be looked upon as air engines in which the difficulty has been got over; it is possible to give to a mass of air (or rather a mixture which is mainly air) in a cylinder, so much heat as to make it white hot in so short a time as $\frac{1}{100}$ to $\frac{1}{50}$ part of a second. We let the stuff escape with a great deal of heat instead of trying to extract the heat again, because we need not use the same air over and over again, and hence we have a practical form of air engine which fulfils all the fine predictions made about it 50 years ago. We saw in Art. 189 that the usual coal gas mixture **contracts 3 per cent. on combustion,** the Dowson gas mixture 5 per cent., and oil engine mixtures 3 per cent. The richer the mixture the less the contraction. We have seen in Art. 245, **how much air** is needed for the complete combustion of a cubic foot of coal gas or Dowson gas or for a quantity of oil. The violence of the explosion, that is, the **rapidity of the combustion,** is less and less as we depart from the exactly right proportions of air and gas, and it has up to the present time been found convenient for this and other reasons to admit from 100 to 50 per cent. more air, which from one point of view means a loss of energy. We considered in Art. 189 the usual mixture, before and after combustion, and we found that the **specific heats and their ratio** were not greatly altered. This is mainly due to the great quantity of nitrogen present and indeed of inert gases generally. There is more difference when Dowson Gas is used, but in all cases we may take it that for

rough calculations which are indeed all that we can make, the stuff behaves just as if it were a perfect gas which itself undergoes no chemical change, which has no energy more than its pressure, volume, and temperature tell us of, and which receives its heat from some other source than itself. In fact we may regard the stuff as if it were air, only that its specific heat ratio γ is 1·37. This is the number which we use, in default of a better, in all gas and oil engine calculations. We may have doubt as to whether combustion is or is not complete at any point in the indicator diagram, but we are in no doubt of our power to calculate temperature on the assumption of behaviour as a perfect gas.

The student is recommended to read carefully Mr. Dugald Clerk's book on gas and oil engines. I know of nobody so capable who has given as much thought to the whole subject. He measured carefully the rise of pressure with time, in a closed vessel containing various mixtures of explosive gases, which were, however, giving up heat to the vessel all the time. His curves are well worth study, although there was no compression before explosion. **The most important result** known to me derivable from his experiments is this and it agrees with the results of Hirn, Bunsen and several others: *only about* 50 *to* 60 *per cent of the heat energy of the stuff seems ever to be developed in the explosion.* This is probably due to dissociation, but if anybody thinks that he has explained the matter by calling it by this name he will be undeceived if he examines the following figures.

271. Mixtures of air and Oldham gas exploded.

Volume proportions of mixture.	Maximum pressure absolute lb. per square inch.	Highest temperature, Centigrade.	Time to reach highest pressure, seconds.	Calculated highest pressure, absolute.	Calculated highest temperature, Centigrade.	Heat indicated.
1 gas 14 air	55	806	0·45	105	1786	·447
,, 13 ,,	67	1033	0·31	111	1912	·537
,, 12 ,,	75	1202	0·24	118	2058	·582
,, 11 ,,	76	1220	0·17	127	2228	·545
,, 9 ,,	93	1557	0·08	149	2670	·582
,, 7 ,,	102	1733	0·06	183	3334	·518
,, 6 ,,	105	1792	0·04	217	3808	·446
,, 5 ,,	106	1812	0·06			
,, 4 ,,	95	1595	0·16			

I find that Mr. Clerk's results are fairly well represented by highest gauge pressure $p = 136 - 6{\cdot}57\ x$, if x is the volume of air per cubic foot of gas; and hence as the available heat in a given

volume is inversely proportional to $1 + x$, the indicated heat is proportional to $(136 - 6{\cdot}57\,x)\,(1 + x)$. This is a maximum when $x = 8{\cdot}85$. But between $x = 7$ and $x = 11$ I find only a difference of about 2 per cent from a mean value.

When heat is given to a gas at constant volume the amount of heat is proportional to the change of pressure. In the present case therefore it is proportional to the highest gauge pressure (neglecting the small differences in specific heat). Hence, what I call indicated heat, is the ratio of the highest gauge pressure to what it would be if all the heat were indicated.

I have no doubt that dissociation is the explanation, but why should we always get about the same amount of dissociation at such different pressures and temperatures? It is not explainable by loss of heat to the cold vessel. Bunsen used a very small vessel, a few cubic centimetres capacity; Berthelot used a vessel 4000 cubic centimetres capacity, and they found much the same results with mixtures of hydrogen and oxygen. Clerk asserts that he has obtained practically the same result with mixtures of coal gas and air compressed before ignition. Twice the pressure before (and therefore twice the heat available) gives twice the pressure after explosion for the same kind of mixture, so that we still have only from 50 to 60 per cent. of the heat developed. These results are in agreement with what we find in Gas Engine Indicator diagrams. The calorific power of gas is always measured by reducing the products to the temperature of the room, and it may be that we never do get this heat developed unless we reduce the products to a temperature less than that of these explosion experiments. The latent heat of the steam formed is one part which must always be wanting, and it may be true, albeit not quite easy for an electrician or a chemist to believe, that there is considerable dissociation at even the lowest of the explosion temperatures tried. But why should the unindicated energy always be of about the same fractional amount? I see no solution of the difficulty.

It has been shown that, starting ignition with a small spark, the time of ignition increases as the volume of the vessel is larger—but by mechanical disturbance or artificial projection of a flame, the ignition may be made almost as rapid as we please even in weak mixtures and large vessels.

There is still much to be done, but it is fairly well proved that we may look upon such calculations as those of Art. 287 as giving us really the efficiency of the gas engine of any of the types there mentioned if we assume that only 60 per cent of the heat of combustion is really given to the working stuff as heat.

I am sorry to say that the only other set of published experiments on the explosion of mixtures of coal gas and air in an iron vessel gave much smaller pressures than those of Mr. Clerk. From these experiments I make out the formulæ :—

$$p = 104{\cdot}7 - 5{\cdot}71\ x$$
$$p = 83{\cdot}3 - 3{\cdot}2\ x'$$

Where p is the highest gauge pressure in pounds per square inch ; x is the volume of air added to one cubic foot of gas ; x' is the volume of air together with products of previous combustions added to one cubic foot of coal gas before ignition. It is tolerably certain that this result cannot be more than roughly true for other sizes of vessel than the one employed, and that we have no right to use it for any case in which the pressure is that of several atmospheres before ignition. If we treat the first of these results of Mr. Grover's as we treated that of Mr. Clerk we find that the most heat will be indicated when $x = 9{\cdot}65$.

Mr. Grover's most interesting result is that better effects are obtained when some of the extra air is replaced by the products of previous combustions. It will be interesting to know what effects he obtains when he uses high initial pressures, for his results so far are in disagreement with our gas engine experiences. The common practice of having nearly as great a volume of old products as of excess air, (it is difficult to say exactly what the proportions were or are, since actual measurements of air admitted are almost never made) is giving place to the use of a scavenging action which is greatly reducing the quantity of old products before ignition. Scavenging has undoubtedly produced good results ; this may not be so much due to its replacing the old products because they contain carbon dioxide, but rather because they are too hot and more actual weight of stuff is wanted. Possibly also lower temperatures may conduce to better combustion.

THE GAS ENGINE.

272. The **Lenoir Engine** of 1860 was not unlike an ordinary small horizontal steam engine. The half-horse power specimen in the South Kensington Museum has a cylinder $5\frac{1}{2}$ inches in diameter, crank $4\frac{1}{4}$ inches. The cylinder had a water jacket to keep it cool and an enormous amount of oil was needed for lubrication. Alternately at each end of the cylinder a mixture of gas and air was drawn in by the piston for about half the stroke, and when the

admission valve closed, was ignited by an electric spark. The diagram, Fig. 235, showing three explosions (AB is the atmospheric line) has a highest pressure of 48 lbs. per square inch. The consumption was about 95 cubic feet of coal gas per hour per indicated horse-power. When the speed increased, the governor acted by increasing the proportion of air from 6 volumes to 12 per cubic foot of gas. The air and gas were admitted by two slide valves worked by two eccentrics.

The **Hugon Engine** differed from the Lenoir only in having better mechanical construction; ignition was by a flame instead of the badly

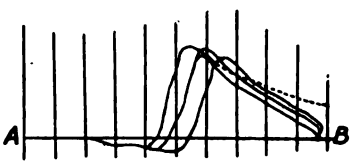

FIG. 235.—LENOIR DIAGRAMS.
Cylinder 8 inches, diameter 16 inch stroke.

arranged electric spark. The consumption of gas was reduced to 85 cubic feet per hour per indicated horse-power.

Much the same principle was employed in the **Bischoff** engine and indeed Fig. 236 fairly well represents the sort of diagram obtained from any of the three.

An enormous improvement was effected in the use of the **Otto and Langen** free piston vertical cylinder engine. In this the charge

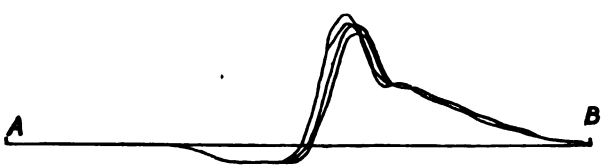

FIG. 236.—HUGON DIAGRAMS.
Cylinder 8 inches, diameter 10 inch stroke. 75 rev. per minute. Scale 1 inch to 36 lbs.

came in below the slightly raised heavy piston and was ignited. The piston rose freely, being temporarily disconnected from all gearing; rose like a projectile, giving the most favourable conditions possible for good efficiency by rapid expansion. Indeed, less on account of the water jacket than of this rapid expansion the pressure became considerably less than that of the atmosphere. Students who have worked exercises on the Bull engine, Fig. 21, will understand the matter. The piston began to fall, acted on by its own weight and

by some outside pressure due to the atmosphere, and in beginning to fall became geared to a shaft which therefore now received mechanical energy. I am astonished that the gas per hour per brake horse-power was not even lower than the 44 cubic feet actually found by experiment, because there was coolness before ignition and

FIG. 237.—BISCHOFF DIAGRAMS.
Cylinder 3½ nch diameter, 11½ inch stroke. 112 revs. per minute. Scale 1 inch to 36 lbs.

therefore probably good combustion with plenty of time for it, and these were combined with rapid and large expansion.

Many thousands of these engines were in use. Their noise enabled the less noisy 'silent' Otto Engine to be rapidly introduced.

In spite of these favourable conditions, a careful examination of the diagram shows, and especially when the more dilute mixtures were used, that there must have been combustion going on to the end

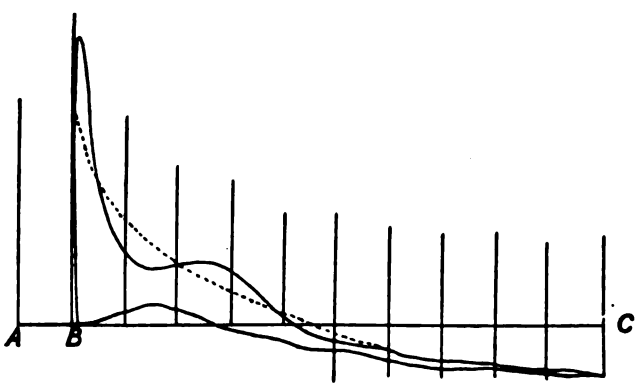

FIG. 238.—OTTO AND LANGEN DIAGRAM.
Cylinder 12½ inch diameter; observed stroke 40½ inches; 28 explosions per minute. Scale 1 inch to 36 lbs. per square inch.

of the stroke. We need not say that this is altogether due to dissociation. Ignition goes on more slowly in a more dilute mixture at a lower pressure. Possibly a less rapid starting of the piston, the use of a heavier piston, would have increased the efficiency. I am told that the consumption in some of the larger forms of these engines was as low as 30 cubic feet of gas per hour per indicated horse-power. In the **Brayton** Engine, the mixture of gas and air was compressed to 75

or 95 lbs. per square inch absolute, and ignited as it passed into the working cylinder through a metal grating. Combustion occurred at nearly constant pressure; there were cut off, expansion, release and fresh admission, just as in a steam engine. An engine of 4 brake or 5 indicated horse-power seemed to consume about 280 cubic feet of gas per hour.

The first good oil engine was a Brayton gas engine using oil, pumped in and burning with the compressed air just like the gas. It was wonderfully steady and to be relied upon for not getting out of order. It consumed about 2 lbs. of oil per hour per indicated horse-power. The *Simon* gas engine was a modified Brayton engine.

The **Otto engine**[1] has four operations in one cycle of two revolutions. It looks much like a single acting steam engine with

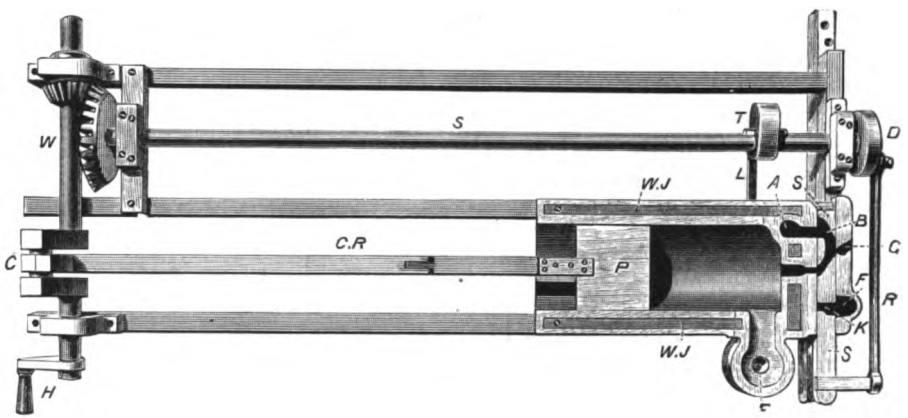

FIG. 239.

trunk piston, with sturdier frame and parts than usual. Cold water is kept circulating through the cylinder water jacket *WJ*. The volume of the clearance space has gradually been diminished from two-fifths of the volume when greatest, to one seventh. I use with students the large lecture model fig. 239, which has the old slide method of regulation now discarded; discarded because of the greater pressures used now. The exhaust (conical seat) valve *E* is closed by a spring and is opened by the lever *L* worked by the cam *T* on the shaft *S* which makes one turn for every two of the engine. A crank *D* on this shaft gives a reciprocating motion to the slide *S*. The flame *F* is used for ignition. When the slide is properly placed, the passage *B*

[1] Dr. Otto in 1876 made the engine, patented by Beau de Rochas in 1862, a practical success, and so it is always called the Otto engine.

allows air to be sucked from A and gas from G in proper proportions into the cylinder, and they mix with the products of previous combustions left in the clearance space. The usual mixture is 1 of coal gas to about 11 of air and products.

This goes on during the whole forward motion of the piston. In the back stroke the mixture is compressed sometimes to more than 100 lbs. per sq. inch. It is interesting to note on the model how the small chamber is filled with gas, and coming opposite the flame F is ignited, and how this chamber full of ignited gas comes opposite the cylinder passage just before the dead point position. There was a certain amount of complication in the way in which it communicated with the passage especially in large engines, so that ignition might really be effective; and it is one of the most interesting things in connection with gas and oil engines, that although the ignition chamber might and often did communicate with the explosive mixture before the end of the stroke, yet ignition did not really occur until the end of the stroke. The piston moves slowly near the ends of its stroke and this conduces to effective ignition. Ignition occurs with remarkable rapidity, the pressure rising 100 lbs. per sq. inch (usually accounting for about half the total heat of the gas supplied), and as the piston moves forward the stuff expands, and the pressure falls. Before the end of the forward stroke the exhaust valve opens, the stuff rushes away through an exhaust chamber and the exhaust pipe. At the end of the back stroke, products remain in the clearance space, and one cycle is complete. The usual governor closes the gas supply when the speed is too great, so that an explosion is missed. There is another kind of governor which throttles the gas supply so that there is some kind of mixture exploded, rich or poor in gas, every cycle. There are some curious kinds of governor in use, but the ordinary centrifugal form is as good as any. The engine is started by lighting the gas jet F, turning on the gas supply, and giving a few turns by hand to the fly wheel until an explosion occurs. In large engines a second cam keeps the exhaust open for part of the compression stroke during the starting of the engine. About half the total heat energy was usually carried away by the water of the jacket; about 30 per cent. went off in the exhaust and about 16 per cent. was accounted for by the indicator work. The exhaust gases were at about 400° to 450° C.

In the diagram, Fig. 240, D is the drawing in, C is the compression, I is the ignition, E the expansion, RA is the exhaust. The use of a planimeter is the easiest way of getting the true area of the diagram,

although it is not difficult to recollect what are positive and what are negative breadths. After a missed explosion, the ignition pressure is usually higher, because the passages are cooler, and, therefore, a greater weight of gas enters; also the clearance space has air in it rather than products to mix with the new charge. In 1881, an engine giving 9 brake horse-power and 11·5 indicated, used 250 cubic feet of Glasgow gas per hour (Glasgow gas is much

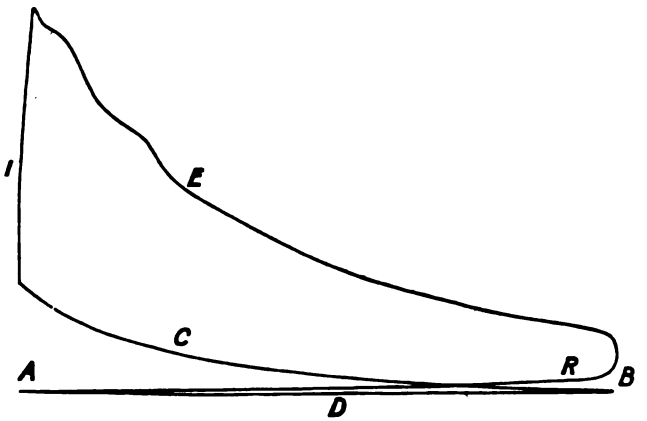

FIG. 240

better than London gas). It was not uncommon to find that the indicated work was 18 per cent. of the total calorific energy of the charge.

Large engines are more efficient than small ones, probably because of the relatively smaller cooling surface. This is very evident from the following trials of Otto engines of different sizes. Efficiency here means the ratio of indicated work to the calorific energy of the gas in one charge.

	Diameter of cylinder.	Stroke.	Efficiency by (1)	Indicated efficiency.
Nearly same compression . . .	7″	15″	·428	·25
	11½″	21″	·428	·275
Nearly same compression . . .	9½	18	·40	·21
	14	25	·41	·277

If ignition occurred at absolutely constant volume, and if all the heat were accounted for, and the compression and expansion were

adiabatic, and if the clearance were in the ratio 1 to r of the greatest volume, it is easy to show, as in Art. 473, that the efficiency is

$$\epsilon = 1 - \left(\frac{1}{r}\right)^{\gamma - 1} \quad . \quad . \quad . \quad (1)$$

and as $\gamma = 1{\cdot}37$, the greatest efficiency possible when using the Otto cycle, and r is 5, is 45 per cent. For good reason we cannot expect to get an efficiency approaching this, but it is interesting to note from the following tests that as r increases the efficiency increases.

Trials as to Compression. The same engine was used in the two tests except that the size of the clearance space was altered.

Pressure (abs) before ignition	75	105
Cubic feet of gas per *I H P hour*	19	17·6

This result was surely to be expected. I have put this strongly to students for the last eighteen years, and I am inclined to think that the superiority of the modern gas engine is mainly due to the better recognition now of the importance of small clearance. The Table, Art. 277, will bring this out strongly.

The actual diagram of an Otto engine is in no way very different from the hypothetical diagram of ignition and release at constant volume and two adiabatics, except in only about 55 per cent. of the heat of the charge being given in the ignition.

273. In **Atkinson's differential engine** a curious mechanism was employed to give a very rapid motion to the piston just after ignition so that cooling should be more the effect of expansion than be due to the water jacket. This principle is the most important thing to remember, but the mechanism by which it was carried out was complex and troublesome.

The Atkinson engine was very efficient, mainly due, I think, to this rapidity of expansion, but also for the following reason. Suppose that we have the Otto cycle, as shown in Fig. 241, *A B C D*, and we have settled the best compression pressure. Now, instead of letting the stuff escape at *C*, let it continue to expand to *E*, by making the cylinder larger, without altering the clearance space or volume of charge admitted, we get the extra work *C*, *E*, *F*, *D*, with no further expenditure of energy. To be strictly correct we ought to say *C E* F^1 D^1, where FF^1, or DD^1, is twice the pressure which represents the friction of the engine *due to this increased part of the cycle.*

The curious mechanism used gave trouble, and **Atkinson**

invented another curious form of engine (called **the cycle**) to carry out the same idea, the four strokes made by a piston in one revolution being all unequal. This engine has also been given up in spite of the wonderfully good results obtained, and Mr. Atkinson constructed another engine with only the ordinary piston and connecting rod mechanism, whose action is probably likely to be copied in the future, when *impulse-every-revolution* engines will, probably, be largely used; although I think that it is not now being made. One side of the piston pumps air into a chamber at 20 lbs. per square

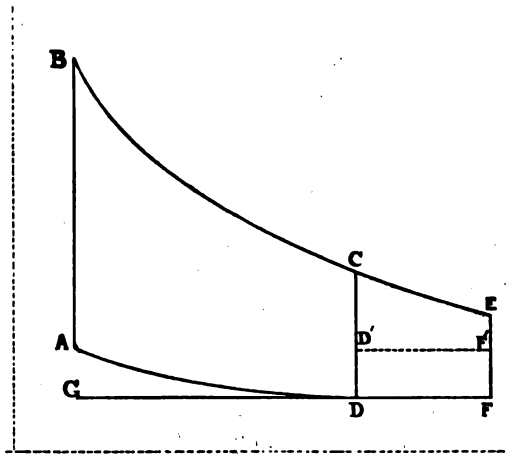

Fig. 241.

inch (absolute). The air flows through a valve to the other side of the piston and causes exhaust gases to escape faster; this air is now compressed, receiving a mixture of gas and air at sufficient pressure from a pump.

Since 1884 I have urged the importance of the two ideas embodied by Mr. Atkinson in his engines. The exercises in Art. 287 show the gain due to increased expansion. The rapid expansion causes less heat to be given to the metal. Unfortunately, in practice it is found that although there is less heat given to the water jacket than in the Otto cycle engines, more heat goes away in the exhaust.

There are other impulse-every-revolution engines which are more or less based on the principle first worked out by Mr. Clerk.

There have been many suggestions to use spray, or wet steam inside the cylinder, to carry off the heat and to utilise part of it in a six-stroke cycle. They have failed through difficulties of ignition.

274. On the expiry of the Otto patent in 1890, there was a great fall in the price of gas engines. Engines on the Otto cycle were so well developed that few other engines are made. Dowson gas has become extensively employed. The principal improvement effected since 1886 consists in the diminution of the **clearance space.** It has always been known from formula (1) of 272, that this would effect increased economy. It is now being carried out: the increase of economy exceeds anticipations, and it is to compression more than to anything else that the increased economy is due. But besides increased compression, the improved design and size of **valves and ports** lets the fresh charge in at higher pressure, and lets the exhaust gases escape more freely: in fact, the old throttling has been done away with. In the old slide the openings had to be small, otherwise the pressure on the slide became very great, and, indeed, this risk of pressure on the slide used to make it difficult to use high compression. Slides are now no longer used and an **ignition tube** is used instead of a flame. The ports now present less area to the incoming charge, and other sources of absorption of heat during ignition, such as contractions where flame passes, are done away with. The student will see from our theory of flues, Art. 377, that there must be extraordinarily more heat given to the metal by throttling action, for example at the exhaust valves than in any other way. It is sometimes thought to be very convenient, for several reasons, to have all the ports, valve seats, &c., in one casting, which may be bolted on to a cylinder, but this convenience is often gained by having narrow ports, a great source of loss of efficiency, absent in the best modern engines. There are also changes to increase strength and diminish cost of manufacture. The cross-head guide is now in one casting with the cylinder, or, rather, there is no cross-head, merely a long trunk piston. The bevil wheels driving the side shaft are now screw gear, and this has made the engine bed more symmetrical.

Figs. 243–5 show one form, and Figs. 247–9 show a smaller form of the **modern Crossley Otto** engine cylinder; gas enters the air passage by a conical valve, lifted by a lever and cam, and controlled by the governor, which either admits gas well or not at all. These are well shown in Figs. 247–9. Gas and air enter the cylinder by a conical valve A, Fig. 243, opened by a lever, acted on by a cam

The exhaust E, is also a conical valve actuated by a lever and cam.

Ignition occurs when part of the compressed stuff enters the tube

T, Fig. 242, kept hot by a Bunsen burner. Thus admission occurs through the double-seated valve *V*, which is worked by a lever and cam. The valve *V* allows the tube *T* to be open to the atmosphere until it lifts from one seat, and then a small amount of inflammable stuff displaces the previous products, so that there may be certainty of ignition.

There are many small engines made in which there is **no valve** between the hot tube and the cylinder. It is found that we can depend upon the ignition not taking place till the end of the com-

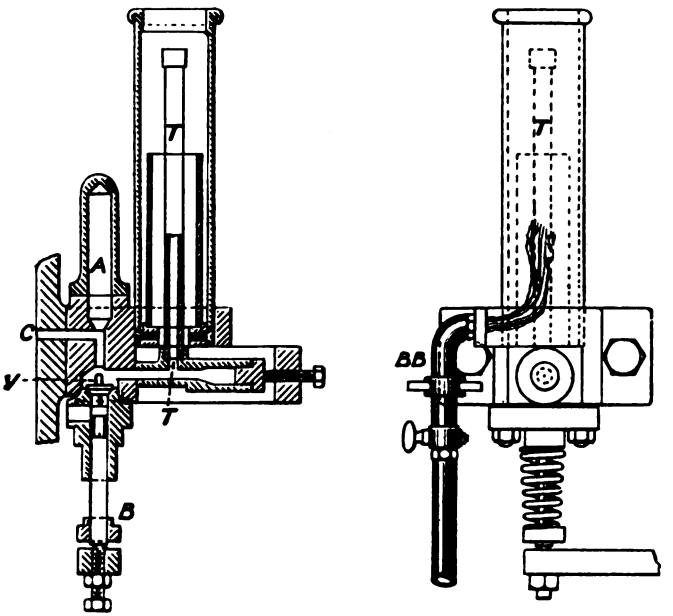

FIG. 242.—TUBE IGNITER.
Tube kept hot by Bunsen Burner *B B*.

pression stroke, and then it is certain to occur; surely one of the most curious of phenomena! It is probably related to the fact that flowing fluid seems more unstable when expanding, so that there may be a great starting of eddying motion at the beginning of the stroke.

275. Scavenging seems to be undoubtedly beneficial. It is specially valuable in engines using Dowson gas. Among other benefits we may notice the greatly diminished chance of an explosion of the incoming charge through meeting the hot exhaust gases. Also, after one or more missed explosions, an explosion is much more

violent and hurtful to the engine when scavenging is not employed. Hence scavenging enables larger and cheaper engines to be built, and these engines might use much hotter jacket water. It is effected in the Modern Otto Cycle engine in the following ingenious way by Mr. Atkinson. The stuff in the long exhaust pipe (65 feet long) gets into a state of vibration like the air in an organ pipe, and by giving it a proper length we get the cylinder to be partially vacuous (2 lbs. below atmospheric pressure) at the end of the exhaust stroke; consequently,

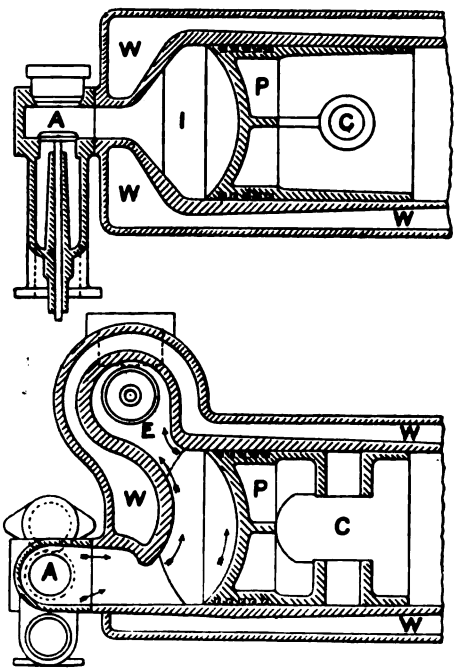

FIGS. 243 AND 244.—CROSSLEY GAS ENGINE.
W, water jacket. *P*, piston. *C*, cross head. *A*, admission. *E*, exhaust.

the exhaust valve being kept open, a valve is able to admit air, which drives out most of the remaining gases and indeed serves to cool the passage through which the incoming charge now enters. This contrivance acts better for well loaded engines than when load is variable. Scavenging is effected in the **Wells (Premier) engine** by pumping air into the cylinder.

Figs. 243 and 244 show the shapes of the passages and piston end, &c., which facilitate this scavenging action. The common Crossley Otto engines range from 100 brake horse-power at 230 revolutions

per minute, to 1¼ horse-power. The brake power is usually 2 to 3 times the nominal power. The makers now guarantee 1 indicated horse-power for 16½ cubic feet of gas per hour, or 17 for the smaller engines.

There are many forms of engine using the Otto Cycle now manufactured. Art. 277 shows the improvement effected since 1881.

There is an engine used for electric lighting which gives 170 brake horse-power on full load, using a governor which reduces the supply of gas and air simultaneously, but misses no explosions. The compression pressure varies from 20 to 75 lbs. (absolute). The result is a speed fluctuation of only three per cent.

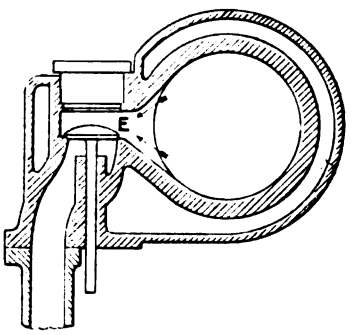

Fig. 245.

I am told that Messrs. Tangye use a curious method of cooling the Jacket water by the atmosphere. The water is sprayed to the roof of the engine room, and is caught again in gutters.

276. Self-Starting Gear. The form most in use is Mr. Clerk's, as improved by Mr. Lanchester and shown in Fig. 246. When the engine is stopping, the valve *V* is opened so that the cylinder *C* and

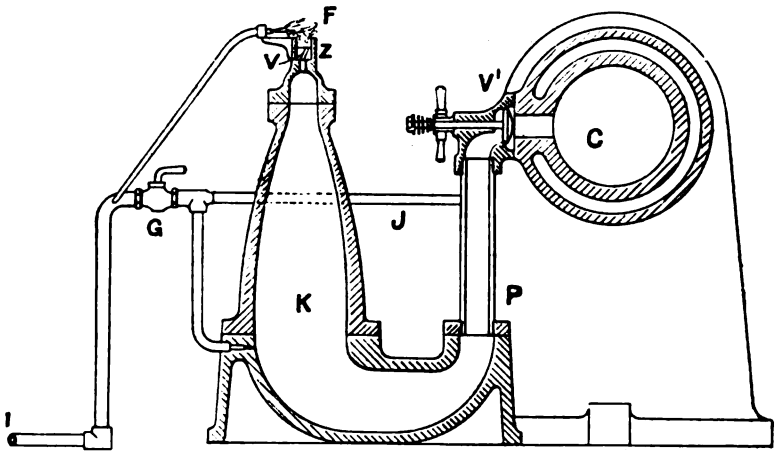

Fig. 246.

pipe *P* and chamber *K* get filled with air sucked in through *Z*. To start the engine, the gas cock *G* lets gas flow into *K* and *P*, and

either by another cock or the exhaust valve into the cylinder *C*. The flame *F* is lighted and presently gas escapes through *Z* and burns at the flame *F*. *G* is now closed and the flame at *Z* shoots back (in a way familiar to people who use gas stoves) igniting the stuff in *K*, closing the valve *Z* against an upper face, and the ignition proceeding along *P* reaches the cylinder. A maximum pressure of 200 lbs. per square inch is reached in the cylinder, quite sufficient to start the engine. When lower starting pressures are sufficient, a much simpler starter is used in which there is no vessel like *KP* to supplement the volume of the cylinder itself. [January, 1899. I have just tested engines with a later form of starter.]

277. In the following table the four Crossley engines marked * will give the best illustration of the **improvement going on.** Hence I give also their efficiencies as calculated by the formula (1), Art. 272. It may be conjectured that in the last case the efficiency might probably only be ·22 without scavenging. Other facts indicate some such gain (say 12 per cent.) due to scavenging. It must be remembered that the calorific power of gas in London has altered a little since 1881.

	Cubic feet gas per I. H. P. hour.	Cubic feet gas per brake H. P. hour.	Compression pressure, absolute.	Indicated power.	Revolutions per minute.	Highest pressure.	Energy of charge indicated.	Efficiency by (1) of Art. 272.
Crossley * (Otto) 1881	25·5	34·0	47	9	164	125	·17	·33
Atkinson (cycle) 1887	19·78	22·50	—	5·56		—	·206	
,, ,, 1888	19·22	22·61	181	11·15	131	—	·228	
Crossley * (Otto) 1888	20·55	23·87	76·6	17·22	160	212	·21	·40
Ignition tube Crossley,* 1892 . .	21·2	25·9	61	19·25	160	215	·20	·37
Lift valves Ignition tube Crossley,* 1894 . Scavenging	14·5	17·0	102·5	14	200	289	·25	·43
Crossley	13·55	—	—	46·8				

In the latest type of **Griffin** two-cylinder engine, admission and compression occur on one side of each piston and ignition and expansion on the other side, alternately, so that there are two explosions per revolution. Worked with Dowson gas there is a specimen indicating 600 horse-power at 120 revolutions per minute. The **Stockport** engines from 1 to 200 brake horse-power run at from 240 to 150 revolutions. For larger powers two cylinders are used, tandem or side by side. In a 400 horse-power (nominal) at Godalming, the governor usually controls the gas supply to only one of the cylinders. The **Tangye** engines are single cylinder from ½ to 125 brake horse-pow

and two-cylinder from 86 to 292 brake horse-power. With large cylinders a large and small exhaust valve are used, the smaller having a slight lead. Also the cam and lever open the gas valve through a secondary lever and tumbler to prevent wear. The Acme or Burt engine is said to be "compound," but it merely carries out the Atkinson Cycle principle. It is said to use (the 6 horse-power nominal size) 18½ cubic feet of gas per brake horse-power hour. I might greatly extend this catalogue, but indeed there is nothing specially interesting in the 30 or 40 types of gas engine now being manufactured in this and other countries. Mr. Donkin in his book

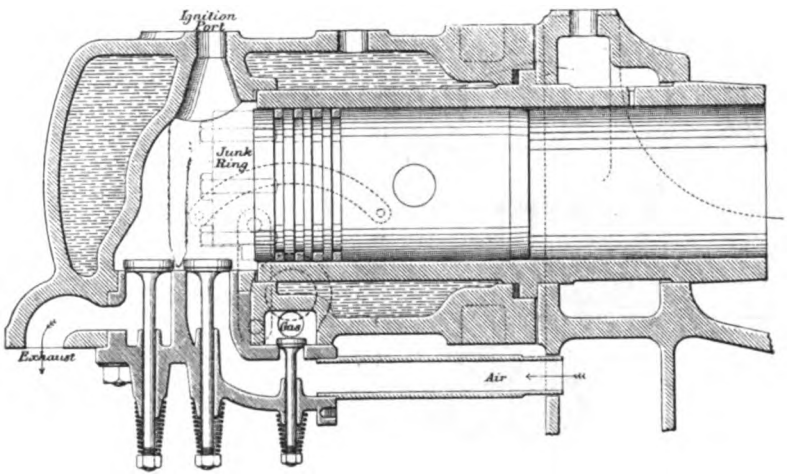

FIG. 247.

(1896) gives the results of a great many tests, with the names of the experimenters and references.

278. Prof. Burstall recently read before the Institution of Mechanical Engineers a preliminary **report of experiments** on a small gas engine, Figs. 247–9, in which various things might be altered separately. He could alter the clearance by removing a Junk ring on the end of the piston. He could also alter the length of the connecting rod. He measured the air as well as the gas [the numbers for air are corrected for air in clearance space]; he used a special electric method of ignition, and a timing valve. But what he did is evident from the table, page 457. The brake horse-power may be calculated from the indicated power by the formula $B = \cdot 72\, I + 0 \cdot 2$.

The following is the composition of the gas by volume; ·045 of heavy hydrocarbons (taken to be C_3H_6), ·007 of O, ·059 of CO, ·353 of CH_4, ·463 of H, ·073 of N.

The results seem to indicate that economy greatly depends upon the ratio of air to gas, and that more air ought to be used when more compression is used. It is worth while noting how complete the

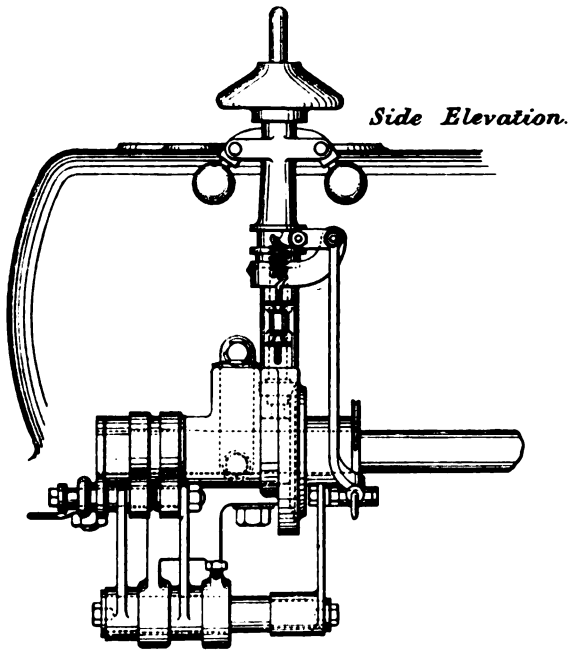

FIG. 248.

combustion may be in the exhaust, and I believe that it generally is very complete in ordinary gas engines.

Teachers will find materials for a great number of exercises for elementary students in the table. For example:

1. Find in every case the greatest possible efficiency, by the formula (1) of Art. 272.

2. Find in every case the oxygen in the exhaust if combustion is perfect.

3. Taking pressure at the beginning of compression as 14 lbs. per square inch, and assuming that the law, pv^n constant, is true, find n in every case.

4. Find what the highest pressure would be in every case if all the heat entered the stuff at constant volume.

5. Check the numbers in column 14 from those in 12 and 13.

279. Oil Engines. Gas may be produced from safe burning oils and used like coal gas in a gas engine. An oil engine is supplied

Number of trial.	Clearance divided by working volume of cylinder.	Air per cubic foot of gas.	Analysis exhaust gases, percentages.		Exhaust gases calculated on assumption of perfect combustion.		Revolutions per minute.	Ratio of number of explosions to possible number per cent.	Pressure before ignition.	Maximum pressure.	Indicated horse-power.	Gas per indicated horse-power hour, cubic feet.	Fractions of total energy.		
			CO_2	O	CO_2	O							Indicated.	To jacket.	In exhaust.
1	0·37	9·1	6·0	10·0	6·3	8·1	118	89	52	118	1·72	33·0	·126	·286	·558
2	0·49	8·0	7·6	6·4	7·2	6·4	161	50	62	211	2·65	25·6	·162	·350	·488
3	0·49	8·36	7·2	7·4	7·1	7·8	158·3	58	64	171	2·69	25·9	·155	·318	·527
4	0·49	7·13	8·0	5·2	8·2	5·0	164·3	52	64	203	2·79	27·3	·154	·415	·431
5	0·46	8·35	7·2	7·6	7·0	8·0	204·4	67	65	167	3·79	26·9	·136	·371	·473
6	0·46	8·48	7·2	7·6	7·0	7·96	204·2	88	65	105	Rejected ignition too late.				
7	0·41	9·48	6·0	9·6	6·0	8·6	156·2	64	72	171	2·87	23·3	·180	·372	·448
8	0·41	7·18	8·2	5·6	8·1	4·7	158·2	53	74	237	2·44	29·7	·144	·452	·404
9	0·36	7·08	8·2	5·8	8·2	5·6	157·7	55	76	230	2·61	27·7	·152	·428	·420
10	0·36	10·01	5·2	10·8	5·1	9·0	155·5	69	80	161	2·61	24·1	·177	·406	·417
11	0·37	8·75	6·5	7·0	6·6	7·8	154·2	69	83	203	2·50	26·6	·164	·418	·418
12	0·37	5·28	9·3	0·4	—	—	154·9	61	83	286	2·52	35·1	·117	·309	·574
13	0·37	10·4	6·2	9·4	5·6	10·5	117·6	75	86	179	1·84	28·2	·150	·415	·435
14	0·25	9·25	5·4	10·6	6·4	9·1	117·7	78	102	210	1·60	31·1	·136	·426	·438
15	0·25	8·6	6·8	8·6	6·9	8·1	197·2	92	103	201	5·10	20·35	·210	·354	·436
16	0·25	7·18	7·4	6·6	8·3	5·4	157·5	70	105	278	2·48	30·28	·135	·328	·537
17	0·25	10·8	3·6	11·6	5·4	10·9	148·9	85	105	135	2·56	23·8	·180	·290	·530

with oil, not with oil gas. It is not usual to include among oil engines the vapour engines which use dangerous light oil. In these the oil is sprayed so as to be in the state of finely divided liquid particles in air; the air easily vaporises the liquid drops, and the explosive mixture is used as in a gas engine. Or the engine draws

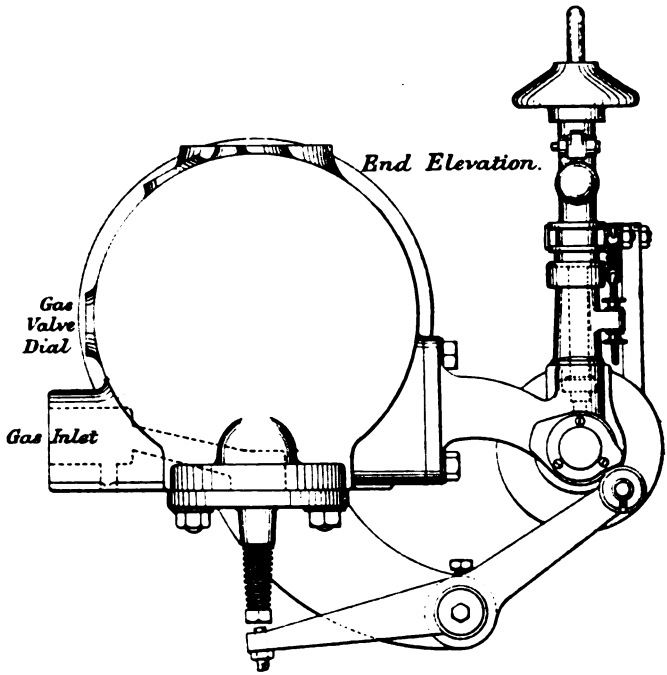

FIG. 249.

air through a liquid "gasoline," and this mixes with more air in the cylinder, the Otto cycle being followed.

Safe burning oils with flashing points (Abel test) above 73° F. are used in engines in the following ways.

1. *Priestman.* The oil is sprayed so as to consist of finely divided liquid particles in air, and when this is heated to 260° F. by the exhaust gases, the liquid particles become vapour, leaving no residue; this vapour is drawn into the cylinder with more air, just as gas is drawn into a gas engine. The theory of the action and the cycle of operations are exactly those of gas engines. A defect of the method is that during compression we are dealing with a vapour, not a gas, and high pressures tend to produce liquefaction; this is more marked when the heavier and cheaper kinds of oil are used. The liquefied oil lubricates the cylinder.

2. *Hornsby-Ackroyd.* The oil is injected into the cylinder, or rather into a very hot recess at the end of it, and vaporised there.

3. The oil is vaporised in a small gas or vapour producer kept very hot, external to the cylinder, and introduced as vapour.

Gas and oil engines in England use the tube ignition, or what comes to much the same, ignition by the hot surface of the combustion chamber; but in America and Germany, ignition by the electric spark is quite common, probably because mechanical engineers have some electrical knowledge in those countries. The flame igniter is never used now. In England, the electric igniter is used only in the Priestman oil engine, I believe. Ignition by the hot surface of the combustion chamber seems to be finding greater favour with the makers of gas and oil engines.

280. Mineral Oil. If I were devoting my attention to the invention or improvement of an oil engine, I would make a careful experimental study of the physical and chemical properties of oils. In use there are American and Russian petroleum, and Scotch paraffin oils. Crude petroleum is a mixture of gaseous liquid and solid hydrocarbons. American oil consists mainly of the paraffin series of hydrocarbons, C_nH_{2n+2}, but there are also some olefines, C_nH_{2n}, whereas the Russian oil consists mainly of olefines, or rather naphthenes, $C_nH_{2n-6}H_6$. The student will do well to go to Mr. Clerk's book for a few elementary notions on the complex chemistry of these oils. It is not generally known that Mr. Clerk early in life paid great attention to the subject. The most interesting thing is that if a heavy member of the paraffin series distils off from an oil, and, after liquefying, drops back on the hotter oil, it *cracks* or decomposes into a lower paraffin and an olefine and carbon. This fact is of importance in the refining of oils. At a high enough temperature, we may get any of them decomposing to marsh gas and carbon, possibly with hydrogen. Merely heating an oil in a closed vessel does not seem to decompose it; for effective decomposition, it is necessary to distil. The volatile liquids "petroleum ether," and "petroleum spirit or naphtha," which are easily distilled from American petroleum, are called dangerous. The common burning oils have a flashing point not lower than 73° F., as tested by the *Abel* apparatus, which every student ought to practise the use of.

On very gradually heating American Royal Daylight oil, Prof. Robinson found that it begins to boil at 144° C. At 215° C., 25 per cent. of the stuff has distilled; at 230° C., 35 per cent. has been distilled; at 300° C., 76 per cent. has come over; at 340° C., 82 per

cent., and at 358° C., his highest temperature, he still had a residue. The colour gradually darkens during the heating. All oils evaporate in this gradual way because they are mixtures, and at high temperatures the constituents decompose and leave a residue of carbon or tar. But it is easy to charge air with their vapour at much lower temperatures, leaving no residues. Some of these constituents which cannot be driven off by direct heat are easily and completely distilled by blowing superheated steam through the liquid. Even the bubbling of air through oil will allow it all to go off in vapour without leaving a residue. The surfaces in combustion chambers need not be nearly red hot, either for vaporising the oil or igniting mixtures of oil and air, and this is specially true in the case of richer mixtures and heavier oils.

281. In the **Priestman engine,** Fig. 252 is the spray producer. Oil comes along *OL* from a tank with air pressure above its oil of 5 lbs. per square inch (gauge), and its fine jet at *L* meets air from *J* (coming from the same tank) in such a way that the spray cloud is produced passing into the vaporiser, Fig. 253, at *K*. The spray vaporises here at about 260° F., the temperature of the surrounding exhaust passage being about 600° F. Air passes through the valve *L* and past the throttle valve *G* and by many holes *a*, *b* to the vaporiser, and the explosive mixture is sucked into the cylinder by the inlet valve *I*, Fig. 251 (the explosive stuff in the vaporiser is a source of danger). The piston *D* compresses the charge and at the end of the stroke an electric spark passes between two platinum points at the end of *E*. It costs about a penny per day to maintain the bichromate battery used to work the induction sparking coil. It would be much better to use a couple of small secondary cells. The spark is timed by contact pieces *K*, Fig. 250, operated by the eccentric rod *E*, which works the pump *P*, driving air into the oil tank. The eccentric shaft has half the speed of the crank shaft; the oil tank has a relief valve.

The rest of the cycle is like that of a gas engine. *E*, Fig. 251, is the exhaust valve. *D*, the cross head. The governor turns the throttle spindle *H*, Fig. 253, which has an oil passage through it to *K*, so that both air and oil are regulated in quantity. To start the engine, the hand pump is used to send oil through the spraying nozzle, and oil spray is formed in the heater *H*, Fig. 250, which mixes with air, and gives a blue flame (only needed in starting) to heat the vaporiser *O*. When this is hot enough the fly wheel is turned and the engine starts off.

Prof. Robinson made some tests in 1892 *using Different Oils with a*

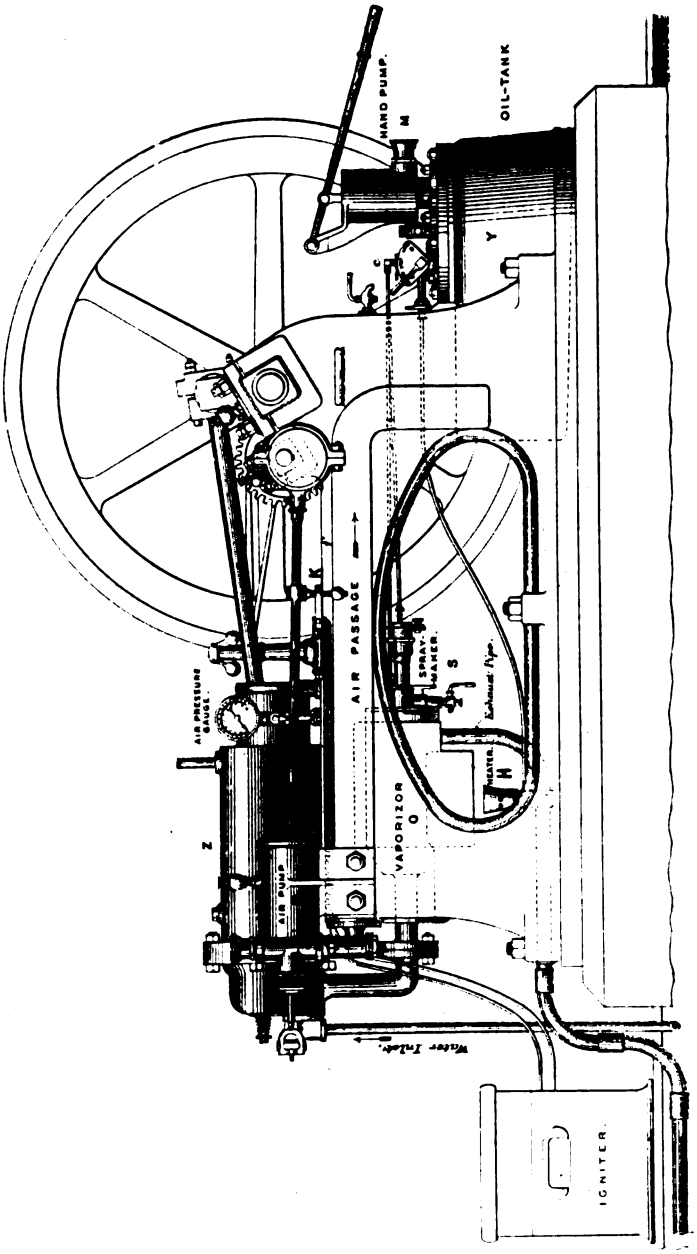
HAND PUMP.
M
OIL-TANK
Y
C
K
AIR PASSAGE
SPRAY-MAKER.
S
Exhaust Pipe.
HEATER.
H
VAPORIZOR
O
AIR PRESSURE GAUGE.
Z
AIR PUMP
Water Inlet.
IGNITER.

FIG 250.

Priestman Oil Engine. Each test lasted 2 to 3 hours; the engine ran at about 212 revolutions per minute. The indicated power is about 12 to 15 per cent. greater than the brake power. Air pressure in oil tank 9 to 12 lbs. per square inch above atmosphere. The heat carried off by the water jacket was from 40 to 50 per cent. of the whole. Vacuum at end of suction stroke, 5 lbs. below atmosphere or 7 lbs. running light.

The combustion at half load was very slow, the highest pressure being reached about quarter stroke. Probably there is a best clearance and best size of engine for each kind of oil.

	Russian ordinary or Russolene.		Broxbourne Lighthouse (a Scotch paraffin).		Royal Daylight (American).		Russian Lustre.	
Specific gravity	·824		·810		·796		·825	
Specific heat	·43		·44		·47		·45	
Flashing point (Abel)	82° F.		152° F.		76° F.		—	
Boiling point	304° F.		329° F.		291° F.		—	
Hydrogen in 1 lb.	·1407		·1390		·1486		·1395	
Carbon in 1 lb.	·8588		·8601		·8462		·8600	
Price per gall. (London) in pence	3⅜		4⅞		4½		3¼	
Calorific power, Fahr. units	21200		21000		21500		21100	
	Full load.	Half load.	Full load.	Half load.	Full load.	Half load.	Full load.	Half load.
Brake power	6·76	3·54	7·5	3·9	7·05	3·7	6·9	3·7
lb. of oil per brake h. p. hour	·958	1·32	0·94	1·216	·912	1·37	·989	1·32
Fraction of total heat represented by brake energy	·127	·095	·130	·101	·135	·090	·124	·083
Temperature of vapour entering cylinder, Fahr.	258°	270°	258°	267°	270°	276°	282°	300°
Pressure before ignition (abs.)	43	27	45	27	40	27	40	25
Highest pressure	135	65	155	65	135	65	135	64

Prof. Unwin, some of whose illustrations I have taken the liberty to reproduce, Figs. 250–3 (*I.C.E. Proc.*, 1892), using less clearance and getting compression pressures of 50 and 42·6 lbs. (abs.), obtained in 1892 better results from Daylight and Russolene; ·842 and ·946 lbs. of oil per brake horse power hour. He used 33 lbs. of air per pound of oil at full power. When he used 30 per cent. more air he got 4 per cent. less efficiency. In reading his important paper, the student will remark that he deducts the latent heat of the water formed from the full calorific power of the fuel, and I do not think this right for statements of efficiency, although very important in a study of the engine. The incoming mixture of the Priestman engine is at a high tempera-

ture, and this causes the power to be less for a given size of cylinder and the temperatures and loss of heat to be greater than in the gas engine. Also it prevents the use of great compression,

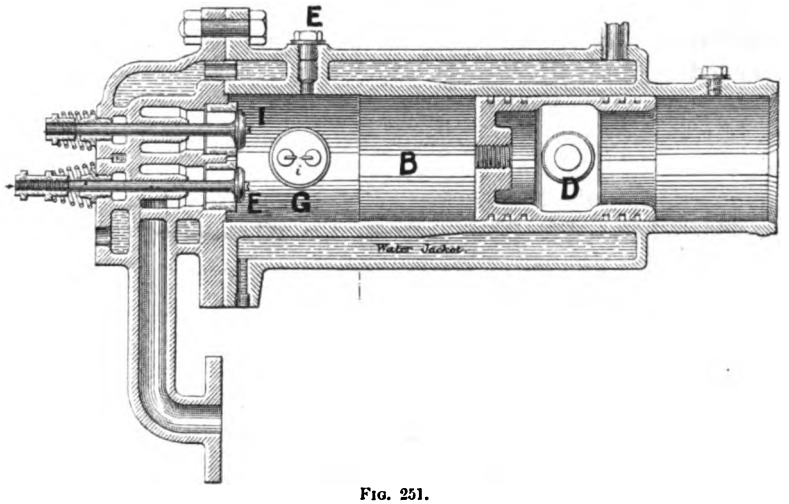

Fig. 251.

because of the danger of ignition in the compression stroke. We can use more compression with lighter oils. As in all the other oil engines in the market, the diagram does not differ in appearance from that of a gas engine using the Otto cycle, and the values of the specific

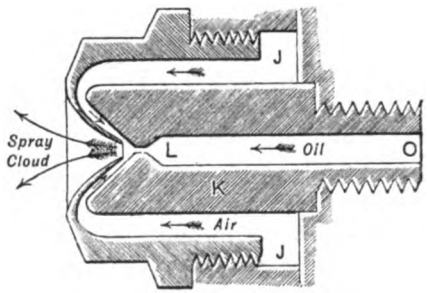

Fig. 252.

heats, and γ, may be taken to be the same in calculations or possibly a little nearer what the values are for air.

282. The Samuelson or **Griffin engine** is like the Priestman in principle, but the governing is by missing explosions altogether and a tube igniter is used. There is an ingenious lamp for keeping the tube

hot. A wire keeps covered with oil by capillary action, and an air jet playing on it carries off spray which forms a fierce blue flame. There are several good oil lamps now, the *Etna*, for example, of Messrs. Crossley, and since these have been invented the hot tube igniter has shown its superiority to the electric spark.

283. Of the second class, the best known is the **Hornsby-Ackroyd** engine. It uses heavy, cheap oils as well as ordinary burning oils. It is shown in Fig. 254, which is a section through the valves *E D*, and also through the water jacketed cylinder *A* and combustion chamber *C*, the one section hiding the other. Oil is pumped into the hot vaporiser *C* through a water jacketed valve box which has a bye pass back to the oil tank opened by the governor when the speed is too great. Thus the pump keeps

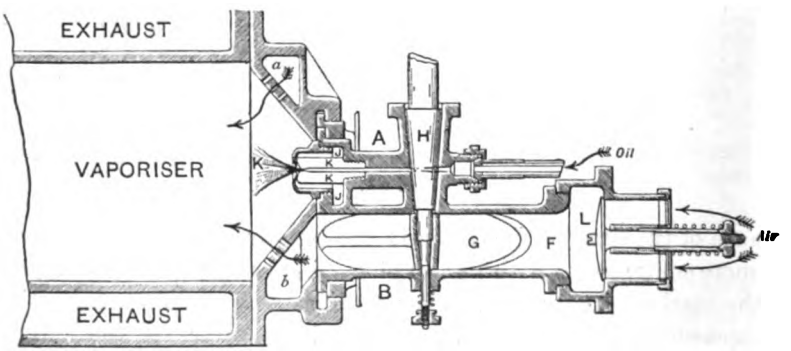

FIG. 253.

working always. *C* is of cast iron with internal ribs and has an air-jacket to protect it from draughts. The self-acting inlet valve *D* and the exhaust valve *E* are in a box below the cylinder. The hand fan *F* is used for eight minutes at starting to blow air over the oil in *B L*, producing a flame to heat up the combustion chamber.

The oil vaporises whilst air is being drawn into the cylinder; during compression, the air enters *C* by the throat, and the mixing and pressure are just sufficient at the end of the stroke to produce ignition. It is probably vaporisation that always takes place, Gasification would probably leave a black residue, and tarry stuff would clog the valves. It is a very wonderful thing that we can depend upon ignition not taking place till the end of the stroke, and indeed we are beginning to rely upon this and to do away with ignition valves in small engines using a tube igniter. It seems that

even when we attempt to ignite by electric spark or flame before the end of the compression stroke, the actual ignition waits for the dead point to be passed. Anyhow, this is securely relied upon in many engines. There is always a little adjustment of the volume of the clearance space needed. It seems that with heavy oil the ignition is easier at lower temperatures than with light oils, and Mr. Clerk thinks that this is due to the greater stability of composition of

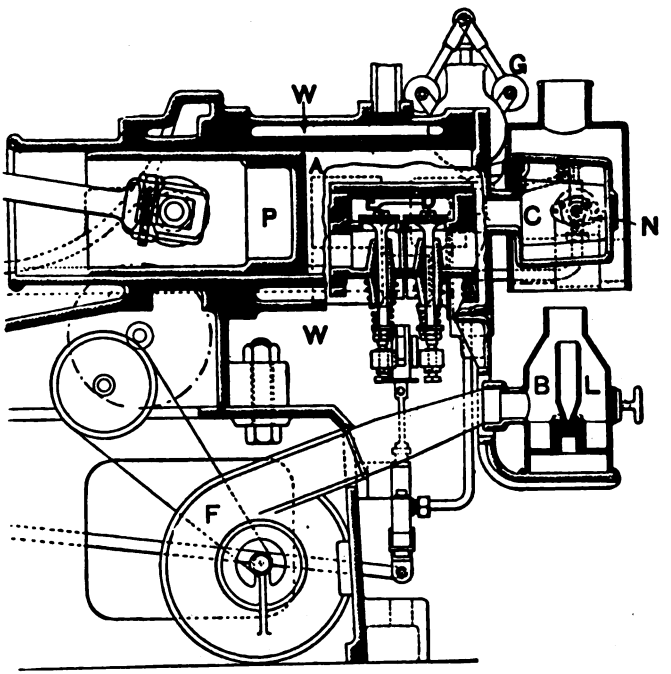

Fig. 254.

light hydrocarbons, the heavy ones separating their carbon so that hydrogen in a nascent state is set free.

The cylinder, unlike that of the Priestman engine, requires lubrication as in gas engines.

In careful tests, 0·153 of the energy was indicated, 0·268 went to the water jacket; 0·579 went off in the exhaust.

284. Of the third class, there are many types. There is more time for the vaporisation of the oil for each charge, because it occurs in a separate vessel and is drawn in through a valve just as gas would be drawn in.

The numbers of the following table, prepared by Mr. Clerk, give some idea of the results now obtained from oil engines:—

	Class I.	Class II.	Class III.				
	Priest-man.	Horns-by.	Cross-ley.	Camp-bell.	Britan-nia.	Wells.	Wey-man.
Lb. of oil per brake h. p. hour	·95	·98	·82	1·12	1·68	1·04	1·12
Compression pressure . . .	27	50	65	40	45	32	38
Maximum pressure	130	112	225	200	155	135	145
Brake horse power	7	8	7½	4·8	6·2	6·5	4·7
Weight of engine in cwt. . .	36	40	32½	27	33	36½	26
Weight cwt. per brake h.p. .	5·1	5	4·3	5·6	5·3	5·6	5·5

I give this table with a little misgiving, because some of the numbers are derived from public trials and others are from trials by interested persons. I take it that the best efficiency yet obtained, according to this table 0·82 lb. of oil per brake horse power hour, is 14·7 per cent. The Diesel oil engine is said to have an efficiency nearly half as great again as this (Art. 291).

285. Calculations. We have already seen, Art. 192, how the following useful rules are derived. They are the rules most used by the designers of new engines.

I. In any change from state p_1, v_1 to p_2, v_2 of a mass of gas the heat *received* is

$$H = \frac{1}{\gamma - 1}\{p_2 v_2 - p_1 v_1\} + W \quad . \quad . \quad . \quad . \quad (1)$$

where W is the work done by the gas in expanding against a vacuum.

II. If there is expansion according to the law pv^s constant, the work done is

$$W = \frac{p_1 v_1}{s-1}\left\{1 - \left(\frac{v_1}{v_2}\right)^{s-1}\right\} \text{ or } \frac{p_1 v_1}{s-1}\left(1 - \frac{t_2}{t_1}\right) \quad . \quad . \quad (2)$$

and

$$H = W\frac{\gamma - s}{\gamma - 1} \quad . \quad . \quad . \quad . \quad . \quad . \quad . \quad . \quad (3)$$

In fact,

$$\frac{dH}{dv} = h = \frac{\gamma - s}{\gamma - 1}\, p \quad . \quad . \quad . \quad . \quad . \quad . \quad . \quad (4)$$

This rule is easily kept in mind if we remember that p is the rate of doing foot-pounds of work per unit change of volume, and h is the rate of *receiving* foot-pounds of energy per unit change of volume.

III. If gas is *compressed* from volume v_2 to volume v_1, and if pv^s is constant, the work done *upon* the gas is

$$W=\frac{p_1v_1}{\gamma-1}\left\{1-\left(\frac{v_1}{v_2}\right)^{s-1}\right\} \quad . \quad . \quad . \quad . \quad (5)$$

The heat H *given out* by the gas is

$$-H=\frac{\gamma-s}{\gamma-1}W \quad . \quad . \quad . \quad . \quad . \quad . \quad (6)$$

In fact, in compression according to the law pv^s constant, the rate at which work is being done *upon* the gas is p. The rate at which the gas is *losing* energy as heat is

$$-h=\frac{\gamma-s}{\gamma-1}p \quad . \quad . \quad . \quad . \quad . \quad . \quad (7)$$

286. Exercise. I do not know if a modern engine would give the same sort of results which I used to obtain in 1881 from a gas engine which had an electric light governor; that is, it had an explosion every cycle, sometimes from a weak mixture, sometimes from a strong one. I found that if v is the volume corresponding to the highest pressure p, we might say roughly that pv was constant. Also I found that the work done in reaching this point from p_0, the pressure before ignition, was also nearly constant. If this were strictly true, show that it means that H, the heat which the stuff shows that it has received (if it were a perfect gas and did not receive heat from itself), is the same for weak and strong mixtures.

For $H=\frac{1}{\gamma-1}(pv-p_0v_0)+W$, and if W is constant and pv is constant, H must be constant.

287. Important *Numerical* **Exercise.** There is a cylinder whose greatest volume including clearance space v_1 is v_4. I take it that the cost of the engine is proportional to v_4-v_1. A volume v_2 of air and gas at atmospheric pressure p_2 and absolute temperature t_2 is compressed adiabatically to v_1; it receives heat H at constant volume so that it gets to v_1, p_3, t_3. It expands adiabatically to v_4 and is released.

Fig. 255 shows the diagram. The compression part may be effected either in a pump or the working cylinder. If C is the capacity for heat at constant volume of the amount of stuff with which we deal, the work done in compression is $C(t_1-t_2)$; in expansion $C(t_3-t_4)$; and the nett work is evidently

$$W=C(t_3-t_4-t_1+t_2)-p_2(v_4-v_2) \quad . \quad . \quad . \quad (1)$$

Now we must change all these temperatures to functions of the

volumes, and as in adiabatic operations $tv^{\gamma-1}$ is constant; if we let $\gamma-1$ be called a

$$t_1=t_2\left(\frac{v_2}{v_1}\right)^a,\ t_4=t_3\left(\frac{v_1}{v_4}\right)^a$$

Also $$H=C(t_3-t_1).$$

Also $$t_3=\frac{H}{C}+t_1=\frac{H}{C}+t_2\left(\frac{v_2}{v_1}\right)^a$$

These enable us to express W in terms of v_2, v_1, v_4 and t_2.

$$W=H\left\{1-\left(\frac{v_1}{v_4}\right)^a\right\}+ct_2\left\{1-\left(\frac{v_2}{v_4}\right)^a\right\}-p_2v_2\left(\frac{v_4}{v_2}-1\right). \quad (2)$$

$$\epsilon=\frac{W}{H}=1-\left(\frac{v_1}{v_4}\right)^a+\frac{ct_2}{H}\left\{1-\left(\frac{v_2}{v_4}\right)^a\right\}-\frac{p_2v_2}{H}\left(\frac{v_4}{v_2}-1\right). \quad (3)$$

If we take the mixture to be (by volume) 9 of air to 1 of coal gas, I take it that a cubic foot of it will weigh

$$\frac{\cdot076\times274}{t_2}\text{ lb. and in foot-pounds } C=263\frac{\cdot076\times274}{t_2}v_2$$

$$H=52600\frac{274}{t_2}v_2\text{ foot-pounds.}$$

Hence $$\frac{Ct_2}{H}=\frac{263\times\cdot076}{52600}t_2=\frac{t_2}{2630}$$

$$\frac{p_2v_2}{H}=\frac{2116\,t_2}{52600\times\cdot274}=\frac{t_2}{6810}$$

If we take $t_2=290$, or 16° C., we have

$$\frac{Ct_2}{H}=0\cdot11\text{ and }\frac{p_2v_2}{H}=\cdot0426$$

and $H=49710v_2$, so that

$$\epsilon=1-\left(\frac{v_1}{v_4}\right)^a+0\cdot11\left\{1-\left(\frac{v_2}{v_4}\right)^a\right\}-\cdot0426\left(\frac{v_4}{v_2}-1\right) \quad (4)$$

If $\frac{v_1}{v_2}$ be called x and if $\frac{v_4}{v_2}$ be called y and if we make the volume swept through by the piston in every case to be 1 cubic foot

$$v_4-v_1=1,\text{ or } v_2(y-x)=1$$

$$\text{or } v_2=\frac{1}{y-x},\ \frac{v_1}{v_4}=\frac{x}{y},\ H=\frac{49710}{y-x}$$

$$\epsilon=1-x^ay^{-a}+0\cdot11(1-y^{-a})-0\cdot0426(y-1).$$

I shall take $a=0\cdot37$.

In the Otto cycle $y=1$ and $\epsilon=1-x^a$, $H=\frac{49710}{1-x}$.

THE EFFICIENCY AND WORK DONE IN ONE CYCLE (AS FIG. 255), FOR VARIOUS AMOUNTS OF COMPRESSION v_2/v_1 AND FOR VARIOUS EXPANSIONS BEYOND THAT OF THE OTTO.

Values of y or v_4/v_2.	Values of the compression $v_2/v_1 = 1/x$.					
	1	2	3	5	7	10
1 Otto cycle	0 0	·2261 22479	·3341 23408	·4484 27863	·5132 29676	·5733 31666
						·6268 22300
2	·208 10340	·3834 12706	·4660 13898	·5554 15539	·6056 16212	·6521 17060
						·6637 13750
3	·370 7085	·4363 8676	·5082 9475	·5853 10391	·6274 10917	·6675 11440

I give the efficiency and W for each case.

$y=2$, $x=1$ represents the Lenoir, Hugon, and Bischoff cycle, but the cylinder has a volume of two cubic feet.

We see that although there is (for all compressions) a considerable gain in heat efficiency in expanding as much again as in the Otto cycle, the power of the engine is less for its size. Also we know that the mechanical efficiency is less. In every case greater compression produces, not only a gain in efficiency, but a gain in the output.

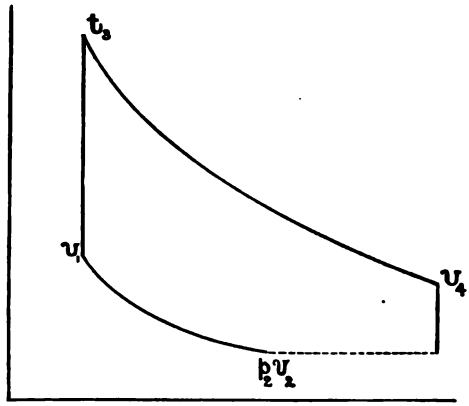

FIG. 255.

I have no doubt that this is now the most important consideration for gas engine makers. To what extent ought we to take advantage of more expansion than occurs in the Otto cycle? I believe that

compounding is remote from us. There is no such necessity as exists in the steam engine for keeping a cylinder hot, rather the reverse, and I take it that this is the most important reason for compounding in the steam engine. Again there is the ever-present difficulty with valves to admit hot stuff from one vessel to another.

There is every reason to believe that we shall in the Otto reach such compression as $x = \frac{1}{10}$, and in view of the future I have considered this case more fully than the others. It is noticeable that the increase of efficiency is considerable when we expand $1\frac{1}{2}$ times or twice as much as in the Otto, and the diminution of work from a given size of cylinder is not so great (at all events for half as much more expansion) but what we may expect to see this improvement introduced. The fact that cooling tends to occur through mere expansion rather than the water jacket is another matter of great importance. At present we have not enough information to enable us to settle the right ratio of v_4 to v_2, but if there had been more space at my disposal I should have been glad to consider the question more fully. In using such a table we must recollect that there is more relative loss by friction when we have a large engine of less power. Also there is more frictional loss with greater compressible pressures.

I have sometimes endeavoured to get a notion of the effect of this, and have used the formula

$$\text{Brake power} = I(\cdot 86 - \cdot 02r),$$

where r is the ratio of greatest volume to the clearance volume.

My students have $\theta\phi$ sheets (Art. 205) ready for the working of any exercises on perfect gases, series of lines of equal v, p, and E being drawn as well as the θ and ϕ lines. On such a sheet it is easy to draw the $\theta\phi$ diagram for the hypothetical cases discussed here. It is also easy to convert a real pv diagram into a $\theta\phi$ diagram.

288. I find that beginners may learn more from exercises worked like 7, 8 and 9 of the following sheet than through algebraic expressions, like those just given. I select this sheet from many others, which I have year by year or week by week put before evening students at the Finsbury Technical College, and I give it as a specimen of the exercises which students ought to do.

Finsbury Technical College, October 20th, 1892.

1. This first question concerns a number of conversions of units of energy, such as are given in Chap. XV. I find that in 1892 I was

anxious to know what all the other costs in the production of energy were as compared with the mere cost of the fuel.

2. In a gas engine cylinder at one point in the diagram where $v = 2$, $p = 14{\cdot}7$, the temperature is known to be 150° C. What is the temperature where $p = 136$?

3. On the expansion curve of an oil engine diagram the following measurements are made. The scales are of no consequence. Find the law of expansion approximately. [Plot log. v and log. p on squared paper.]

v	1·1	1·4	1·7	2·1
p	168	120	88	65

4. Calculate the energy obtainable from 1 lb. of liquid fuel, which contains 0·8 lb. of carbon and 0·135 of hydrogen. Give it in Cent. heat units, in foot-pounds and in evaporative poundage, from and at 100° C. What volume of air is required for its complete combustion?

5. Calculate the energy obtainable from 1 cubic foot of gas, containing 0·2 cubic foot of hydrogen, 0·5 of marsh gas, 0·2 of olefiant gas. What volume of air is required for its complete combustion?

6. Power is distributed by shafting to small shops at £30 per annum per horse power. A shop uses power for 54 hours per week. What is the cost per horse power hour? If the engine uses 3 lbs. of coal per hour for each horse power delivered to customers, and coal is at seventeen shillings per ton, compare the cost of the coal with the total cost.

7. A cubic foot of a mixture of coal gas and air is taken (1 : 9 by vol.) at 100° C. and pressure 2,116 lbs. per square foot. How much energy is given to it in compressing it adiabatically to 0·5 cubic foot? (Take $\gamma = 1{\cdot}38$.) Find also its pressure and temperature at the end. Now give it 40,000 foot-pounds of heat, keeping its volume constant. What are its new pressure and temperature? Now let it expand adiabatically to 1 cubic foot; how much energy does it lose (absolute work done by it upon a piston, say)? What is the nett work done? Divide by 40,000 for the efficiency. [Students were expected to do this by the formulæ of Art. 192.]

8. Repeat all the calculations of (7), but let the smaller volume be 0·4 or 0·3 or 0·2 or 0·1 cubic foot. If all cases are worked out, show the results in a table.

9. Prepare a new table, but let the last expansion be to 2 cubic feet, and subtract 2,116 foot-pounds from the balance of work done.

289. I made sure that students did these exercises after the lecture. I refrain from giving a sheet in which a complete set of exercises was to be worked out from a given indicator diagram, and the information that accompanied it. I refrain because this book is getting to be much too large, but I cannot help giving a few exercises from another sheet which lies before me. It is evident that I had a

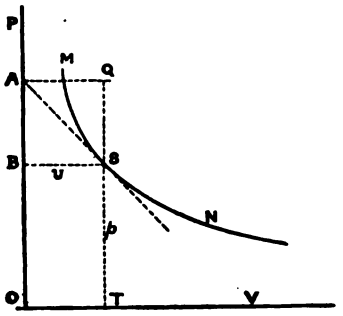

FIG. 256.

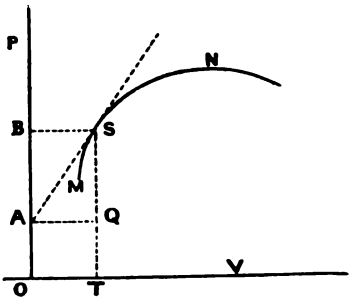

FIG. 257.

hard-working set of evening students that year, and I wonder how they have used their knowledge. This sheet is dated 3rd November, 1892.

1. Some of you have taken a gas engine and some an oil engine diagram, and you have drawn curves showing p, t, h [h is $\frac{dH}{dv}$ of Art. 285], and combustion [our $\frac{dH^1}{dv}$ of Art. 294], the volume being abscissa. Prepare another sheet in which *time* is the abscissa. You may assume an infinitely long connecting-rod.

2. [I find that I here gave some rules already given in Art. 285, the following one is a new statement of an old rule. I do not, however, like to draw tangents to curves.]

Draw tangent SA to a p, v curve MSN at the point S. Prove that

(1) In Fig. 256, $h = \frac{\gamma \cdot ST - SQ.}{\gamma - 1}$ . . . . . (1)

(2) In Fig. 257, $h = \frac{\gamma \cdot ST + SQ.}{\gamma - 1}$

3. On October 20th I asked you to find the useful work done in various cases of clearance, and of total volume of cylinder. Now, the

value of a given type of engine may be stated as depending somehow upon, 1st, The fact that we obtain x foot-pounds of energy usefully from one explosion. 2nd, The cost of the engine and its maintenance and attendance, which may be taken as proportional to v_4, the volume of the cylinder. 3rd, The pressure after ignition, which depends upon clearance; because if the pressure is great the engine costs more money, and is more of a nuisance. What is your idea of a figure of merit made up of v_2, v_4 and v_1?

290. EXERCISE. A cubic foot of gas engine mixture at atmospheric pressure p_1 and absolute temperature t_1 is compressed adiabatically to the pressure p_2 and temperature t_2. It is then ignited at constant pressure p_2 to the volume v_3 and allowed to expand adiabatically to the atmospheric pressure again and temperature t_4. Find the work done and the efficiency. This is the Brayton engine principle.

Answer. The heat given is $H = K(t_3 - t_2)$. The heat that would be taken out to begin a new cycle with the same stuff is $K(t_4 - t_1)$. Hence the work W done is $K(t_3 - t_2 - t_4 + t_1)$, and the efficiency is $\epsilon = \frac{W}{H}$ or $1 - \frac{t_4 - t_1}{t_3 - t_2}$, but as compression and expansion are adiabatic, $\frac{t_4}{t^3} = \frac{t_1}{t_2}$, so that

$$\epsilon = 1 - \frac{t_1}{t_2}$$

Along an adiabatic $tp^{\frac{1}{\gamma} - 1}$ is constant, and hence

$$\epsilon = 1 - \left(\frac{p_1}{p_2}\right)^{1 - \frac{1}{\gamma}}$$

Thus as p_1 is one atmosphere, if we take $\gamma = 1{\cdot}37$, we have the following values of ϵ, and W is the same as ϵ if H is 1.

p_2 in atmospheres	2	4	6	8	10	12	14	17	20	25	30
ϵ	·1708	·3123	·3835	·4297	·4630	·4888	·5095	·5345	·5547	·5709	·6008

291. It is now fourteen years since I first gave exercises like those of Arts. 287–290 to my students, pointing out the gain of efficiency due to increased compression. The first engineer who has tried to carry out the idea has met with wonderful success in the **Diesel motor**. The best account of its performance which I have seen, is in *The Engineer*, October 15, 1897. Careful experiments

have been made, but I believe that the only published accounts of them are written by Mr. Diesel himself. The consumption of oil was 0·56 lb. per hour per brake horse power, so that the efficiency is 46 per cent. better than the best results given in the table, page 466. Mr. Diesel, in his 20-horse power engine at about 160 revolutions per minute, pumps air into a receiver at 700 lbs. per square inch. This very hot air enters with oil in a state of combustion into the motor cylinder (9·8 in. diameter, 15·7 in. stroke) at the beginning and for about one quarter of the stroke, the pressure falling; it is then cut off and the stuff goes on expanding to the end of the stroke, when it is exhausted; cushioning brings the pressure to 400 lbs. per square inch in the motor cylinder before a fresh admission takes place. It is then the Brayton cycle except that during the combustion the pressure is not kept constant. A water jacket has been found necessary. It is said that there is no great falling off in efficiency when working at half load.

292. EXERCISE. In the Atkinson gas engine, at a famous trial in 1888, the expansion and compression curves followed the laws $pv^{1\cdot264}$ constant and $pv^{1\cdot205}$ constant. Taking $\gamma = 1\cdot367$ in the expansion and $\gamma = 1\cdot385$ in the compression (see Art. 189), what is the rate at which the stuff, as a gas, shows that it is receiving or losing heat?

Answer. If h is rate of heat reception per unit volume, so that it may be represented to the same scale as the pressure,

$$h = \frac{1\cdot367 - 1\cdot264}{1\cdot367 - 1} p = 0\cdot28\, p \text{ in the expansion}$$

$$-h = \frac{1\cdot385 - 1\cdot205}{1\cdot385 - 1} p = 0\cdot467\, p \text{ in the compression.}$$

In the compression heat is being lost to the cylinder nearly half as fast as work is being done upon the stuff.

293. In 1885, with Prof. Ayrton, I published a paper in the *Proceedings* of the Physical Society in which I pointed out how the gas engine diagram ought to be studied. I took a diagram which I had obtained from a 6-horse engine at Finsbury, and from my own and other measurements of temperature, showed how we might find the rate of combustion of the gas going on in the ignition and expansion, and how the whole chemical energy was disposed of. The exercises of Art. 189 illustrate how I showed that we might speak of the stuff in a gas (using coal or Dowson gas) or oil engine cylinder before and after combustion, as if it were the same perfect gas with $\gamma = 1\cdot37$, which had undergone no chemical change, and had received heat from an outside furnace. [The alteration is small, but it may be

that it is sufficient to account for the fact that we never get more than 60 per cent. of the chemical energy in an explosion.] I then not only showed that the compression and expansion parts of the diagram follow a law like pv^m constant and how to find m, but that in an engine controlled by an electric light governor there was an easy way of stating the law for the whole ignition and expansion parts of all the diagrams (bad and good explosions) on a card.

This is

$$p = Mv^{-m}\left\{\kappa^1 + nu - \sqrt{(\kappa - nu)^2 + s}\right\}$$

where $u = v$ the volume − the clearance volume; κ^1 and κ are constants. s is also a constant, but any very small number will do for s. n is a constant which depends upon the point in the stroke where the maximum pressure occurs, and this really, for a given speed of engine and method of ignition, depends upon the richness of the mixture. M is a constant which depends upon the recentness of the last explosion. m is the ordinary index of v in the expansion curve. I showed how inexact all calculations from the diagram were, unless we used an empirical formula like this. It was, however, sufficiently accurate to represent the whole of a curve by two expressions

Ignition part $p = (a + bu)\,\kappa v^{-m}$ . . . . . (2)

Expansion part $p = \kappa v^{-m}$ . . . . . (3)

where κ, a and b are constants.

Using the formula (see Art. 285) for reception of heat energy per unit change of volume

$$h = \frac{dH}{dv} = \frac{1}{\gamma - 1}\left(\gamma p + v\frac{dp}{dv}\right) \text{ where } \gamma = 1{\cdot}37 \quad . \quad (4)$$

I drew a diagram of h to the same scale as p. I then showed with a fair approach to accuracy how the total energy of a change was disposed of. We have so greatly improved on those results of 1885 that I shall not venture to give them here, and I will now use a diagram (Fig. 258) sent me from King's College (one of Mr. Burstall's tables, Art. 278) to illustrate my method of finding the rate of combustion.

I find, p being in lb. per square foot and v in cubic feet,

Compression curve $p = 1884\ v^{-1{\cdot}13}$ . . . . . (5)

Expansion curve $p = 4877\ v^{-1{\cdot}23}$ . . . . . (6)

Ignition curve $p = (\cdot 336 + 100u)\ 4877\ v^{-1{\cdot}23}$ . . . (7)

where $u = v - 0{\cdot}247$.

I am afraid that the rise of pressure on ignition is too rapid for us to be able to speak accurately of its law in the present exceptional

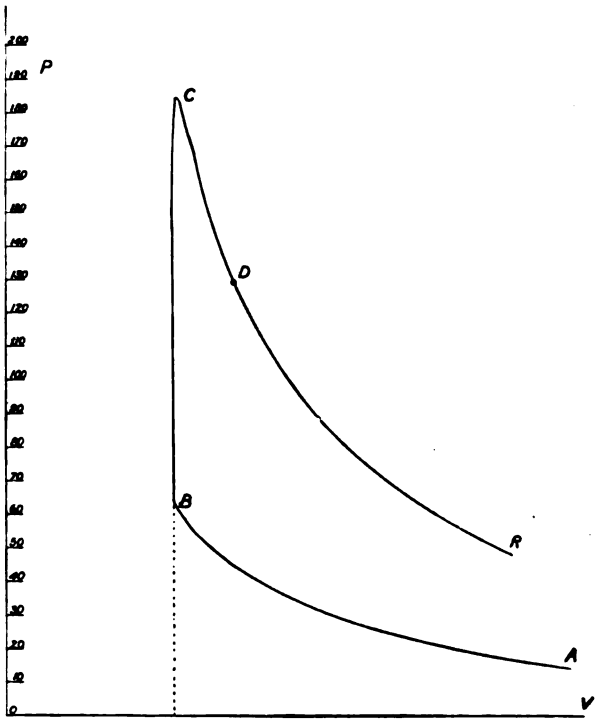

FIG. 258.

Average effective pressure, 44·6; diameter of cylinder, 8½ inches; stroke, 18 inches; 170 revolutions and 88 explosions per minute; gas, per explosion, ·061 cubic feet; clearance, ·1247 cubic feet.

case. From these we find, if h is rate of *gain* of heat by the stuff

Compression $h = -\cdot 65\, p.$

That is, the stuff is *losing* heat at a rate which is $\frac{2}{3}$rds of the pressure

Expansion $h = \cdot 378\, p$

Ignition $h = \cdot 378\, p + 2\cdot 110 \times 10^6\, v^{-\cdot 23}$

For the reason given I feel that there is an unnecessary pretence at accurate statement for the ignition part.

294. *Rate of loss to* **Water Jacket.** We usually know the total loss per explosion to the water jacket if the engine is kept on full load for a few hours. In this case it was 35 per cent. of the total heat of the charge, the indicated power being 16 per cent. During the trial

only 50 per cent. of the possible explosions took place, or one explosion in four revolutions or eight strokes. Hence, if w is the indicated work on the diagram, we have $\frac{35}{16}\,w$ given in eight strokes. We shall not be far wrong if we take w as being equal to the heat given in the ignition and expansion stroke up to release.

In my paper in 1885, I assumed that the rate of loss of heat per second by the stuff to the jacket is proportional to $\theta - 60$ if $\theta°$ C. is the temperature of the stuff. As more area is exposed when temperatures are lower, I thought that this was a good enough rule for rough calculation. I might now use a rule deduced by Mr. Wimperis from some experiments by Mr. Petavel, on the loss of heat ϵ per square cm. per degree by bright platinum in an atmosphere of carbon dioxide, at temperatures ranging from 200° C. to 1,200° C., and at pressures ranging from 6 mm. to 228 mm.

$$\epsilon = 1{\cdot}55 \times 10^{-8}\, p\,(1000 + \theta) + 1{\cdot}67 \times 10^{-6}\,\theta$$

where p is in pounds per square inch and the temperature is $\theta°$ C. I have not found this altogether satisfactory, however, nor is it right to assume that such a law can hold for our high pressures and an iron surface. Let the student work for the present according to my old rule. Calculate θ at every point of the diagram, assuming that at A it is 120° C. Assume that $\frac{dH^1}{dt}$ (where t is time) is represented to some scale by $\theta - 60°$ C. We want $\frac{dH^1}{dv}$, where v is volume, and as

$$\frac{dH^1}{dv} = \frac{dH^1}{dt} \cdot \frac{dt}{dv}$$

we have to divide $\frac{dH^1}{dt}$ by the velocity of the piston to get $\frac{dH^1}{dv}$ to an unknown scale.

Now make the average height of the $\frac{dH^1}{dv}$ curve equal to the average pressure of the indicator diagram, because the loss of heat H^1 to the jacket is equal to w, and so we get the true value of $\frac{dH^1}{dv}$ to the same scale as the pressure.

The values of $\frac{dH}{dv}$ as calculated from (4) Art. 293, are given.

Add $\frac{dH}{dv}$ and $\frac{dH^1}{dv}$ to find the total rate of development of heat by combustion.

This is on the same scale as the pressure, and is very interesting.

If it is desired to know the **rate of combustion** *per second*, multiply by the velocity of the piston.

Our present knowledge only allows us to make very rough approximations. In all probability there is very rapid combustion in the stuff, just as it is throttled in passing the exhaust valve.

v	p Lb. per square inch.	θ° C.	Velocity of piston.	$\theta - 60$ Divided by velocity.	dH/dv Lb. per square inch.	dH/dv Calculating from (Art. 293) lb. per square inch.	Total rate of combustion per unit volume.	Rate of combustion per second.
·247	63·5	264	0	∝	∝	1260	∝	—
·248	170·0	1179	—	—	—	1260	—	—
·253	183·9	1329	30	42·30	211·5	69·5	281·0	8430
·279	167·9	1341	67·5	18·98	95·0	63·48	158·5	10700
·336	129·1	1226	113	10·32	51·6	48·79	100·4	11340
·394	107·1	1186	137	8·219	41·1	38·67	79·8	10900
·452	90·9	1146	151	7·193	36·0	34·37	70·4	10600
·512	76·8	1076	159	6·389	32·0	29·03	61·0	9700
·672	68·1	1068	158	6·377	31·9	25·74	57·6	9100
·630	60·0	1031	153	6·346	31·7	22·69	54·4	8320
·697	53·1	1006	137	6·905	34·5	20·07	54·6	7480
·750	47·7	958	114	7·877	39·4	17·99	56·4	6430

The velocity of piston is nearly proportional to the ordinate of a semi-circle on the stroke as diameter, and may be to any scale, so that $(\theta - 60) \div$ velocity of piston $= c \dfrac{dH^1}{dv}$. This is plotted with v on squared paper, as a curve whose average height is 8·95, but the average value of $\dfrac{dH^1}{dv}$ = average effective pressure, say 44·33 × 144 lbs. per square foot, and hence $c = \dfrac{8{\cdot}95}{44{\cdot}63} \times 144$. Using this c, I get true $\dfrac{dH^1}{dv}$ to be $\frac{1}{5} \times 144$, or I multiply the fifth column by 5 to get the sixth column of numbers. Rate of combustion per second in Column 9 is to an unknown scale, being the previous column multiplied by velocity of piston.

Every time I have made this interesting calculation on a gas or oil engine diagram, I have found, as here, that the rapidity of the combustion (per second) reaches a maximum some time after ignition begins. In the present case, it is some time after the pressure has begun to fall, about D, Fig. 258. The results ought to be plotted and shown in a curve.

295. Mr. Wimperis worked this problem more elaborately. He

found θ everywhere in compression, ignition and expansion, and calculated ϵ as above. In compression, he had $-\frac{dH}{dv} = 0{\cdot}65\,p$, and dividing by velocity of piston as given above, he had numbers proportional to $\frac{dH}{dt}$ or $\frac{dH}{dv} \cdot \frac{dv}{dt}$. He divided by ϵ and $\theta - 60$, and took the quotient to represent A, the area of metal exposed to radiation in each case. It was interesting to note that these values of A were in pretty much the right proportions. He now took these found values of A to calculate from ϵ and θ the values of $\frac{dH}{dt}$, and, therefore, $\frac{dH}{dv}$, &c., in the ignition and expansion.

I do not give his results here, because I think that the method is too good to be illustrated by a case in which we are in doubt of the starting temperature. Also I think that the skin temperature of the metal may not be so nearly constant as it seems to be in the steam engine, and, besides, an exercise like what I have given will serve better to start a student in thinking about this subject.

296. Exercise. **Rate of Combustion.** The following exercise will show how a student may obtain some information as to the combustion going on in one of Mr. Clerk's experiments. The information is not very exact, but it is worth something. Mr. Clerk (Art. 271) took a mixture of 1 of Oldham gas to 9 of air at 14° C. and atmospheric pressure, and obtained a curve showing the pressure at various times after ignition. This is one of his many results, and I chose it at random. I made the following measurements of t (time in seconds after ignition) and p (the increase of pressure in pounds per square inch). The rise of temperature θ ought to be almost 20 times p.

I thought that after $t = \cdot 7$ the combustion had probably ceased, and that, thereafter, I might take the rate of loss of heat to the cylinder as being represented by

$$q = a\theta + b\theta^2$$

I found that with considerable accuracy this seemed to be the case, and, indeed, that I might take

$$\theta = \frac{10{,}000}{1 + 34t}$$

So that a is practically nothing, for

$$-\frac{d\theta}{dt} = \cdot 0034\,\theta^2$$

The observations are not so very regular as to allow us to fix ·0034, rather than ·0033, and I thought it well to get help in the following way. I plotted θ^2 from $t = o$ to $t = 1$,

$$\text{and found } \int_0^1 \theta^2\, dt \text{ to be } 692800$$

Now we know that the total heat was $2670c$, and the heat $300c$, remains, so that $b \int_0^1 \theta^2 . dt$ ought to be $2370c$, and hence $b = ·0034c$. This wonderful agreement with the previous result gave me some satisfaction. I take the capacity of the stuff to be c, a constant; or

$$q = ·0034\, c\, \theta^2$$

Hence we may take

$$\text{rate of combustion} = c\left(\frac{d\theta}{dt} + ·0034\, c\, \theta^2\right)$$

I smoothed the curve for θ, and found the values of $\frac{d\theta}{dt}$ given in the table; the addition of the numbers in the fourth and fifth columns gives those in the sixth, which seem to me very interesting. Without making too much of the result, we may say that it gives a roughly correct sort of indication of how the combustion takes place.

COMBUSTION GOING ON IN A CLOSED VESSEL.

t Seconds.	Observed gauge p.	θ.	$d\theta/dt$.	Rate of loss to vessel divided by c. $·0034\,\theta^2$.	Rate of combustion divided by c.
0	0	0	?	0	?
·05	45	900	20000	2754	22754
·1	77·5	1550	0	8168	8168
·15	64	1280	−4500	5572	1072
·2	53·5	1070	−3100	3894	794
·3	42	840	−1900	2400	500
·4	34·5	690	−1350	1618	268
·5	28·75	575	−1000	1124	124
·6	25·0	500	− 750	851	101
·7	21·0	410	− 574	597	23
·8	18·0	368	− 461	461	0
	16·25	329	268	368	0
1·0	15·0	300	306	306	0

CHAPTER XXVIII.

VALVE MOTION CALCULATION.

297. A SLIDE VALVE worked by an eccentric or crank on a uniformly rotating shaft gets very nearly a **simple harmonic motion.**[1] There are **various ways** of studying this motion.

1. Counting time t in seconds from the dead point position of the engine, if y is the distance of the slide to the right of the middle of its stroke at the time t; if r is the half travel of the valve, or the length of the crank working it, or the eccentricity of the eccentric; if it revolves at q radians per second, and if a is the angle of advance, if angles are measured really in radians (although I shall sometimes write them as degrees), then

$$y = r \sin (qt + a)$$

Whether or not the crank goes round uniformly, if θ is the angle which it makes with the inner dead point (nearest the cylinder), and if x is the distance of the piston from the end of its stroke (most remote from the crank), the crank being R and connecting rod L

$$y = r \sin (\theta + a)$$

$$x = R(1 - \cos \theta) + \frac{R^2}{4L}(1 - \cos 2\theta)$$

very nearly. If we take $\theta = qt$ and if the crank makes q radians per second, the valve has a simple harmonic motion, and the piston has a fundamental simple harmonic motion with its octave or another such motion of twice the frequency.

[1] Simple harmonic motion is regarded now as a badly chosen term. Some such term as "simply periodic motion," suggested by Professor Schuster, would be better. Simple vibration ought to be used instead of simple harmonic vibration. I employ the usual term unwillingly.

2. In Fig. 259 if $OE = r$ the half travel of the valve, or if OE is the eccentric crank working the valve which slides in a direction parallel to DOF; in the position shown in the figure, the valve is at the distance OH from the middle of its stroke. If this is compared with (1), and if $GOE^1 = a$ the angle of advance, OE^1 is the position of the eccentric crank when the main crank is in the dead point position OD.

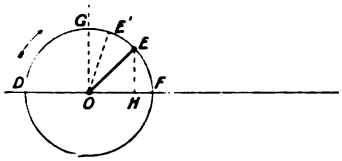

FIG. 259.

3. In Fig. 260 if DOF is the ine of centres and GOG^1 a line at right angles to DOF; set off $COG = C^1OG^1 = a$, the angle of advance. Make $OC = OC^1 = r$ the half travel of the valve and describe the circles shown, on OC and OC^1 as diameters. If the main crank is in any angular position OB the intercepts OB^1 cut off by the circle OC show y the distance of the valve to the right of its mid stroke; the intercepts OB'' cut

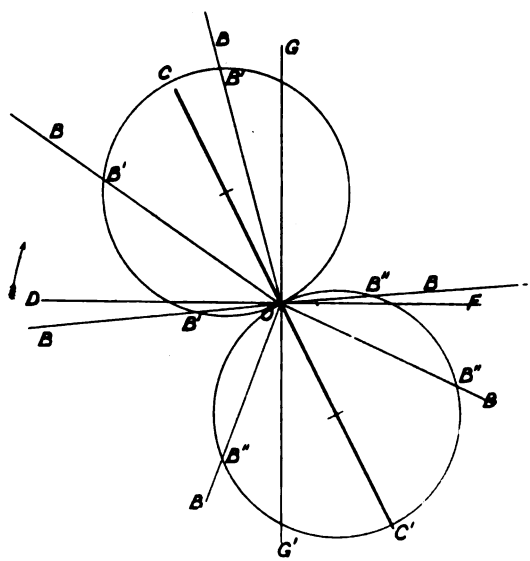

FIG. 260.

off by the circle OC^1 show the distance of the valve to the left of its mid stroke. This method of study has already been dwelt upon. It is the one that I myself prefer in spite of the fact that the angle of advance is always set out as if it were negative. Should the velocity of the valve be wanted as an intercept on the

crank position, it is only necessary to draw two new circles whose diameters are at right angles to COC^1.

4. In Fig. 261, BM represents, the time of one revolution, from B which represents one dead point or $t = o$, to M which represents the same dead point again or $t = T$ the time in seconds of one revolution.

A point P shows by PQ the distance y of the valve to the right of its mid-position at the time indicated by BQ. It is easy to see that the sine curve $EFPIKAE$ is drawn, just as the projection of the spiral edge of a screw thread is drawn. Starting with E^1 (GOE^1 is the angle of advance) divide the circumference of the circle E^1FPG into any number of equal parts numbering the points

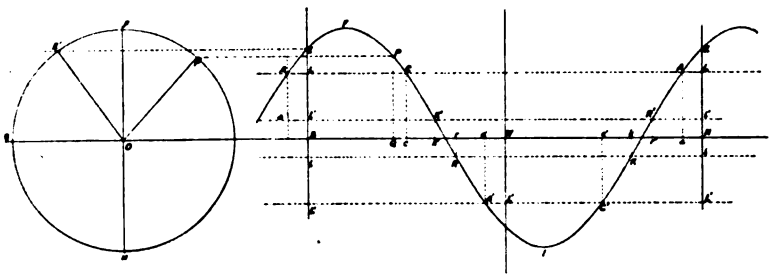

FIG. 261.

of division 0, 1, 2, &c. Divide BM into the same number of equal parts, and starting with B, number the points of divisions 0, 1, 2, &c., project horizontally and vertically. Or again, it may be very quickly drawn on squared paper, using a table of sines of angles. It is important to note BE the distance of the valve from the middle at the dead point; this is the lap + the lead, or $r \sin a$.

As in Art. 73 if from y we subtract the lap BL we get LE the opening of the port to steam, drawing $LCAL$ parallel to BM is the best way of making this subtraction and we see that BC represent the time or the angle passed through by the crank when cut off takes place. If Bl is the inside lap and ll is drawn, we get Br, the angle passed through by the crank when release takes place and Bk when cushioning takes place. W bisects BM and W shows a dead point. If BL^1 and Bl^1 are the outside and inside laps on the other side of the valve, we find A^1, C^1, R^1, and K^1 for the return stroke.

The value of this method of study, which is really very clumsy when motions are all simple harmonic, lies in this, that it is almost

the only method of study, and is certainly the simplest method, when the motions are not simple harmonic—that is in practically every case in which the slide valve is worked from link motions or radial valve gear. My students have practised it for twenty-four years, but as applied here, it is now published I think for the first time.

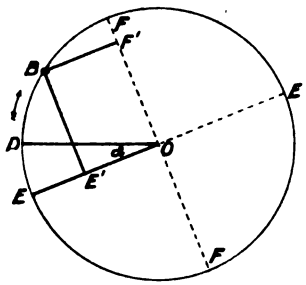

FIG. 262.

The curve showing the displacement of the valve is sometimes put upon the same sheet as a curve showing the position of the piston. Thus in Fig. 296 *Cc* shows the distance of the valve from its mid stroke and *CE* shows the distance of the piston from its mid stroke for any position of the crank. I myself prefer to compare valve position with that of the crank, and having found the crank positions when the four events occur, to use a template method of getting the piston position as in Fig. 93.

5. If a valve is worked from a crank shaft. Let *OD* (Fig. 262) be a dead point position of the main crank. Make *DOE* equal to the advance *a* of the valve; then for any position *B* of the main crank, draw perpendiculars to *EOE* and to *FOF*, which is at right angles to *EOE*. The valve is at the distance BE^1 to the right of its mid position, and its velocity is represented by BF^1, and its acceleration is represented by BE^1. The scales of such measurements ought never to give any trouble. For example, what is the scale of the displacement BE^1? It is evidently to the scale to which *OE* represents the half travel. The scale of the velocity BF^1 is the scale to which *OE* represents the greatest velocity. The scale of the acceleration BE^1 is the scale to which *OF* represents the greatest acceleration, this is the same as the centripetal acceleration of the crank-pin, which would give the slider its motion.

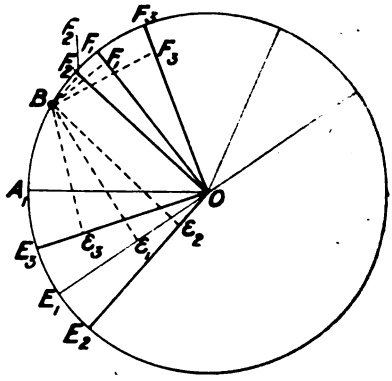

FIG. 263.

If a number of slides are worked from the same shaft, with different half-travels and angles of advance [advance means angle

exceeding 90°, by which slider crank is ahead of main crank], the distance of each and all of them to the right of its mid stroke for any position of the crank-pin, or any other rotating point of reference, may be shown on one diagram. Let OA_1 (Fig. 263) be the dead point position. Make A_1OE_1 the advance a_1 of one slider, make A_1OE_2 the advance a_2 of the second slider, make A_1OE_3 the advance of the third slider, and so on. Then for any position B of the crank-pin the sliders are at the distances BE_1, BE_2, BE_3, &c., to the right of their mid positions. Furthermore if OF_1, OF_2, &c., are perpendicular to OE_1, OE_2, &c., the perpendiculars BF_1, BF_2, &c., represent the velocities of the sliders.

6. Let points on A_1OA_2 (Fig. 264) represent the positions of the piston. Describe the circle $A_1GA_2G^1$. Let the main crank be in the position OB. Make A_1OE^1 the angle of advance, then if to

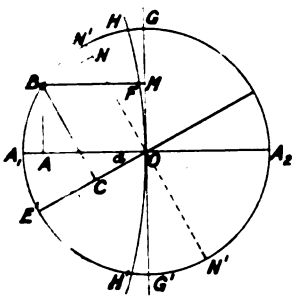

Fig. 264.

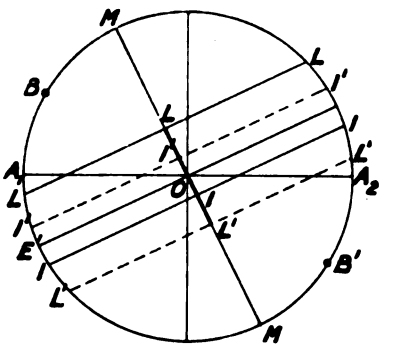

Fig. 265.

one scale A_1A_2 is the travel of the piston, and if to another scale it represents the amount of the travel of the valve; drop the perpendiculars BA and BC, and BM, then when the piston is OA or BM from the middle of its stroke; the valve is BC from the middle of its stroke. This is evidently easy to prove. Also if q is the angular velocity of the crank, the speed of the valve is qBN, BN being measured on the scale on which ON^1 is the half travel of the valve. If we wish to take into account the angularity of the connecting-rod, we draw HOH^1, a circular arc with radius that of the connecting-rod, centre in the line of centres; then the distance of the piston from the middle of its stroke is not BM but BF. Drawing lines (Fig. 265) parallel to E^1O at distances from it, OL = outside lap; OI = inside lap; OL^1 = outside lap on the other side of the valve, OI^1 = other inside lap; we see that the distances of any point like B or B^1 from these lines show the amounts of opening

of the valve to steam and exhaust on the two sides of the piston. The positions of the main crank at admission, cut off, release and compression in both forward and back strokes, are evidently given by the ends of these lines, and the velocities of the valve when these events occur are presented by $\frac{1}{2}q$ times the lengths of these lines.

7. Let A_1O (Fig. 266) be the line of centres. Make A_1OE^1 the advance; OE^1 = the half travel. About E^1 describe circles whose radii are the outside and inside laps. Draw four tangents from O to these circles. Prove that these tangents, produced if necessary, are the positions of the main crank when the four important events occur. Oa^1 admission, OC (or C^1O produced) when cut off occurs. OR (or r^1o produced) when release occurs, OK when cushioning occurs. Of course the proof is easy as soon as one shows that the perpendicular distance of E^1 from any radial line drawn from O is the valve displacement for that position of the crank.

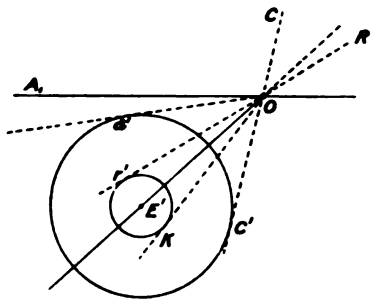

FIG. 266.

298. It is quite easy from what has been given, and using the methods either of 1, 2, 3, 4, 5, or 6, for any student accustomed to easy practical geometry to work such **problems** as:—

1. Given travel and port openings to steam for two positions of the main crank, to draw the hypothetical diagram.

A particular case of this is, given half travel, cut off and lead.

2. Given travel and ratios of amounts of port openings for three positions of the crank, draw the diagram.

3. Given travel, advance and ratio of lap to lead.

4. Given amounts of port opening for three positions of the crank. A special case of this is:—given the lead, the position of the crank at cut off, and the opening of the port in some other position of the crank.

5. Given the maximum opening of the port and given the openings for two given positions of the crank. A special case of this is:—Given the position of the crank at cut off, the lead, and the maximum opening.

299. On a diagram (Fig. 267) let a point P show by its distance PE from a line B_1OB_2 the distance of the piston from the middle of its stroke, and by its distance PD from a line O_1OO_2 the distance of

the valve to the right of its mid stroke. These distances need not be to the same scale. If O_1L and O_1L^1 are the laps (to the same scale as the valve motion) on the two edges of the valve, and if O_1l and O_1l^1 are the two inside laps, the horizontal lines from these points cut the curve at admission, cut off, release and compression in forward and backward strokes. If the valve has a simple harmonic motion

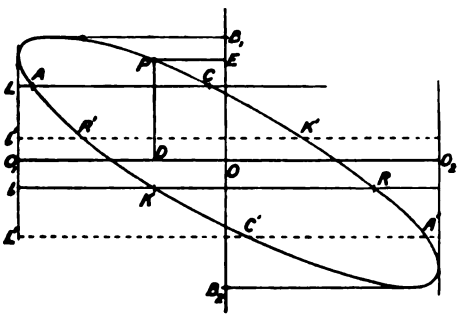

FIG. 267.

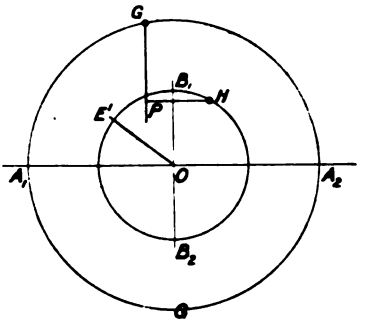

FIG. 268.

and the piston also, the curve is evidently an ellipse, and the student will do well to draw it by projection as in Fig. 268. Let OB_1 represent the half travel of the valve, and let A_1A_2 to any other convenient scale represent the travel of the piston. Describe the circles. Let the angle E^1OA_1 be made equal to the advance. Divide both circles into the same number of equal parts, and number the points of division, beginning with A_1 and E^1 as 0, 1, 2, &c. Project vertically from points on the larger circle, and horizontally from corresponding points on the smaller circle, and we evidently obtain the curve re-

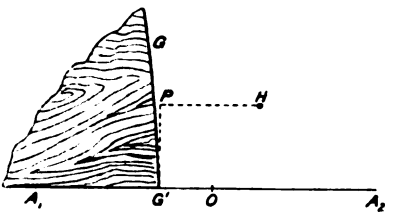

FIG. 269.

quired. Thus if G is a point on the larger and H on the smaller, P is a point on the curve.

To take into account shortness of connecting rod, we proceed as before; but Fig. 269 shows how we use G and H to find P. We project from G to A_1OA_2 by our curved template of Art. 67 to find G^1,

and the vertical from G^1 meeting the horizontal from H gives the true P.

Or again we may take the diagram Fig. 296, and in Fig. 297 we plot Cc as ordinate and CE as abscissa.

300. Mr. Macfarlane Gray's (or Müller's) method of showing the displacement of the piston for any position of the crank is interesting to look at, but is not easily applied in practice because of the great size of the drawings needed.

Let AOF (Fig. 270) be the line of centres, the piston being on the side A. Let G be the crank pin and O the centre of the crank

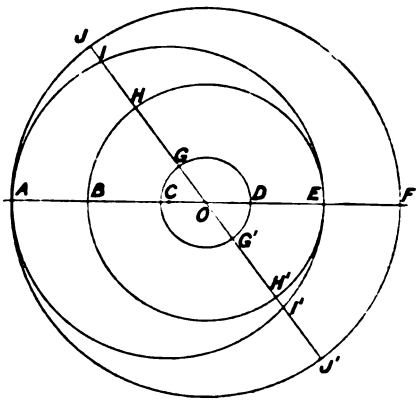

FIG. 270.

shaft, $OG = r$, $AC = l$ the length of connecting rod. Describe the circle AJF about O with $l + r$ as radius. Describe BHE with $l - r$ as radius. On AE as diameter describe AIE. Then for the position G of the crank pin, the displacement of the piston from the left hand end of its stroke is JI; displacement from the right hand end being HI. For the position G^1 of the crank pin we have H^1I^1 the displacement of the piston from the right hand end of its stroke.

301. Combinations of Motions. All cranks or eccentrics working sliders are given as to position when we say that they have so much advance a, that is the amount in excess of 90°, by which they are ahead of the main crank; the half travel r being also given. The motion is defined by

$$y = r \sin (\theta + a) \quad . \quad . \quad . \quad . \quad . \quad . \quad (1)$$

y being distance of slider to right of mid position when main crank makes an angle θ with dead point. Suppose that one crank can give motion (1) and another crank can give

$$y^1 = r^1 \sin (\theta + a^1) \quad . \quad . \quad . \quad . \quad . \quad (2)$$

Suppose that a slider could get both these motions at the same time, what would the total motion be?

Draw the two cranks in their proper positions relatively to the main and of their proper lengths. Thus if OD (Fig. 271) is the main crank and MON is the direction of motion of the slider, draw OF at right angles to OD. If $FOA = a$ and $OA = r$; if $FOB = a^1$ and $OB = r^1$, complete the parallelogram $OAEB$. Then $OE = R$ is the length of a crank and $FOE = a$ is its angle of advance, which would give to the slider a motion which is the sum of the motions (1) and (2).

To prove this, drop perpendiculars from A, B and E on ON. The slider would be at the distance OA^1 to the right of its mid position

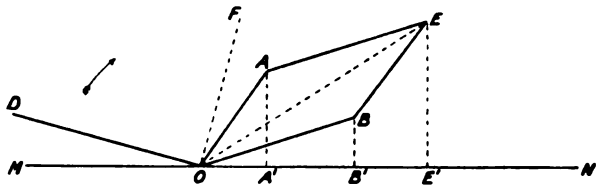

FIG. 271.

if OA alone worked it; it would be at the distance OB^1 to the right of its mid position if OB alone worked it; it would be at the distance OE^1 to the right of its mid position if OE alone worked it. But it is obvious that as OA, OE, and OB are supposed to go round with the same angular velocity; in any position whatsoever $OE^1 = OA^1 + OB^1$, and hence the proposition is proved.[1]

In particular let the student notice that if $a = 0$ and $a^1 = 90$, (1) and (2) become

$$x = r \sin \theta,\ x^1 = r^1 \cos \theta$$

and

$$x + x^1 = \sqrt{r^2 + r'^2} \sin (\theta + a)$$

where a is such that $\tan a = \frac{r^1}{r}$.

He had better draw the figure that corresponds to this.

EXERCISE. Suppose that a slider gets the motion (1) and that another slider moving on or near the first gets the motion (2), what is the motion of the second slider **relatively** to the first? That is, suppose a fly to be on the first slider and not to know that it was in motion, looking at the second slider, what would the motion of this second slider *appear* to be?

[1] A student who knows a little trigonometry sees how to express FOE and the length of OE in terms of a, a', r and r'.

Answer. Draw OA and OB (Fig. 272) as before. Make OA the diagonal of a parallelogram $OBAE$ of which OB is a side. Then OE is a crank which would give to the second slider, if the first slider were at rest, the motion which the fly thinks that it has when both sliders are really in motion.

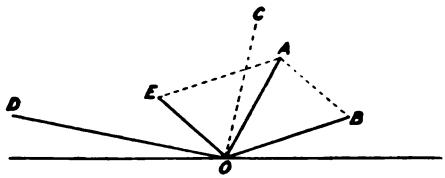

FIG. 272.

This proposition is needed in cases where one valve works on the back of another as in Fig. 150.

302. In what way is it possible to give to a slider a combination of two motions?

Lord Kelvin in his Tide Predicting Machine has shown us how to give to an inkbottle a combination of many simple harmonic motions of various frequencies, amplitudes, and epochs. But he used a flexible connection. Usually the mechanical engineer requires a rather rigid connection.

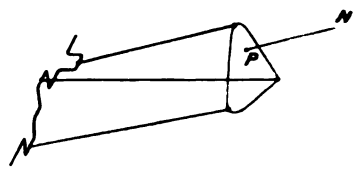

FIG. 273.

Let three cranks work, nearly at right angles to it, the three corners of a plate (Fig. 273). Then from any point P in that plate a slider may be worked by a rod PN which would get a combination of the three, depending on where the point is placed.

FIG. 274.

In this way by again combining such motions we can give a slider a combination of many crank motions.

Use of a Link. Usually we only want to combine two crank motions, and a link is commonly used.

If A and B, Fig. 274, are two points getting small displacements (or velocities, or accelerations) a and b at right angles to AB, then the displacement (or velocity of acceleration) c of C, a point in the same straight line is

$$c = \frac{BC}{AB}a + \frac{AC}{AB}.b \quad . \quad . \quad . \quad . \quad . \quad . \quad (1)$$

Notice the fraction of each of the two motions that C gets and study the proposition well. It is quite easy to prove by drawing $AA^1 = a$ and $BB^1 = b$, and calculating CC^1 or c.

I shall here speak of the link as being vertical and its displacements as horizontal.

If in the plane of the paper the end A, Fig. 275, of the straight link AB gets a horizontal S. H. motion from the crank OA', whose centre is on the level of A and the end B gets a S. H. motion from the crank OB', whose centre is on the level of B and which goes round with the same angular velocity, then any point C in the link gets a motion which is just the same as if it were worked by an ideal crank rotating at the same angular velocity about a centre O on the level of C. To find this ideal crank: Let OA'' and OB'' show the relative angular positions of the given cranks at any instant, and let OA'' and OB'' represent their lengths to scale. Join $A''B''$. Divide $A''B''$ in C'' so that $A''C'' : C''B''$ as $AC : CB$. Join OC''. Then OC'' is an ideal crank of the proper length and properly related angularly to the given

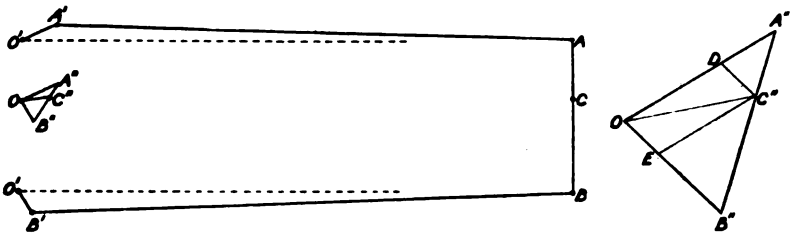

FIG. 275.

cranks to give to a point C exactly the same motion which it gets in quite a different fashion. C really gets its motion because it is in a link ACB; but the crank OC'' would give it that motion if it were not constrained by the motions of A and B.

To prove this. Draw $C''D$ and $C''E$ parallel to $B''O$ and $A''O$. Magnify the figure as shown here. C has a fraction of A's motion; the fraction $\frac{BC}{AB}$. Now A is moved by a crank like OA''. Hence C would get its proper fraction of A's motion if it were moved by a crank $\frac{BC}{AB}.OA''$. But $A''C''B''$ is divided proportionately to ACB, and we see that OD is just the crank which would give to C its proper fraction of A's motion. Similarly OE is just the crank which would give to C its proper fraction of B's motion, and it is evident from Art. 301 that the ideal crank OC'' would just give the sum of the motions which OD and OE would give.

We always assume the motions to be simple harmonic and to be very small and at right angles to the length of the link,

and our rules are not exactly true when these conditions are not fulfilled.

Instead of speaking of the length of the ideal crank we say "the half travel," and in a steam engine, the angle minus 90° that the ideal crank makes with the dead point position on the side remote from the cylinder is called the "advance." These terms are used because we use them in Art. 74.

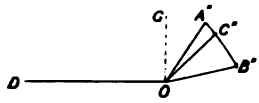

FIG. 276.

EXERCISE 1. In a link the point A gets a half travel a and an advance α; the point B gets a half travel b and an advance β, what are the half travel and advance of C?

Answer. Draw OD, Fig. 276, to represent the main crank and OG at right angles to it. Make $GOA'' = \alpha$ and $OA'' = a$. Make $GOB'' = \beta$ and $OB'' = b$. Join $A''B''$ and divide it in C'' as the link AB is divided in C; the half travel of C is oC'' and its angle of advance is GoC''.

EXERCISE 2. Suppose the half travel of A is 3 inches and of B is 2 inches; suppose the advance of A to be o and the advance of B to be 90 degrees, find the half travel and advance of C, if C is shifted along from A towards B, 1st, when C is at A; 2nd, when $AC = \frac{1}{4}AB$; 3rd, when $AC = \frac{1}{2}AB$; 4th, when $AC = \frac{3}{4}AB$; 5th, when C is at B.

EXERCISE 3. Suppose the half travel of A to be 3″ and its advance 0; the advance of B to be 90° and its half travel to be altered from 0 to 1, to 2, to 3, to 4 inches; find the half travel and advance of C in each case, if C is always midway between A and B.

It is evident that if C is not in the straight line joining A and B, but is with A and B in a flat arc of a circle, the relative distances of C in the arc from A and B may be taken pretty much in the same way as in the straight line.

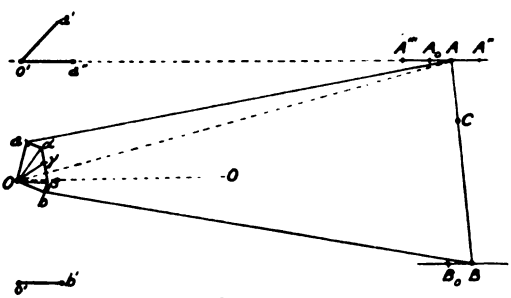

FIG. 277.

303. EXERCISE 4. Suppose that if in Fig. 275 instead of A and B being worked by cranks OA' and OB' on their own levels they are **both worked from the same shaft** as in Fig. 277.

Find by skeleton drawing or in any other way the limits of A's motion, say A'' and A'''. Now note that if a crank $O'a'$ on the same

level as A worked it in the direction $O'A$, A would be at A'' when $O'a'$ or $O'a''$ is horizontal; but truly Oa would then be in the direction OA'' as shown in the dotted line; in fact $O'a'$ must be ahead of Oa by an angle equal to AOO and its length must be half of $A''A'''$. On looking into the matter more carefully it will be seen that the angle ought to be something between $A''OO$ and $A'''OO$. I usually take OA_0 the length of the rod aA to find the point A_0 and I take the angle A_0OO to be the correct amount by which Oa' is ahead of Oa. Also, I think that it will be easily seen that the length of Oa' is best obtained, not by skeleton drawing and finding the positions of $A''A'''$, &c., but by making $aOa = A_0OO$, and drawing aa at right angles to Oa; thus Oa is found parallel and equal to $O'a'$. In the same way we find $O\beta$ a virtual crank which on the level of B would give it the motion which it gets from Ob. Now of course if we join $a\beta$ and divide in γ as the link AB is divided in C we get $O\gamma$ a virtual

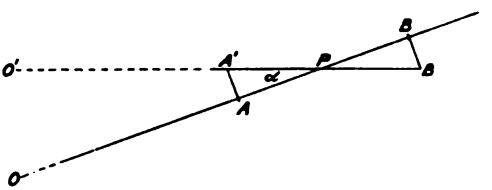

Fig. 278.

crank which if on the level of C would give to C the motion that it really gets.

304. Although the above way of putting this matter will commend itself to the practical man, the following **more mathematical method** may also be welcome. In any case, however, we are compelled to leave out small terms and to an experienced man the above method is just as good as this that follows.

A crank $Os = r$ works a slider Q in the direction QC, what is the nature of the motion of Q?

Perhaps it is more simply seen in Fig. 278. P is the middle of Q's path $A'B'$. If the motion were in the direction $BPAO$, in the line of O, $PA = PB = r$. By drawing BB' and AA' perpendicular to OAB we have the ends of the path of the slider, if the rod were infinitely long. Now if a crank at O' gave the motion $A'PB'$, it would be of length $PA' = PB' = r \sec a$ and when the O crank was directed towards OB' (the same as OP if rod is very long) the O' crank would be directed in the line $O'P$. In fact the O' crank would be a ahead of the O crank.

Let OC, Fig. 279, be at right angles to CPQ.
Let $PQ=x$. Let $OS=r$, $SQ=l$, $COS=\theta$, $OP=l$, $OC=a$.
Let $CP=k=\sqrt{l^2-a^2}$.

$$\left.\begin{aligned} r\sin\theta+l\cos\phi&=k+x\\ r\cos\theta+l\sin\phi&=a\end{aligned}\right\} \quad \ldots\ldots\ldots\ldots \quad (1).$$

$l\sin\phi=a-r\cos\theta$, therefore $l\cos\phi=\sqrt{l^2-a^2+2ar\cos\theta-r^2\cos^2\theta}$.

$$l\cos\phi=k\sqrt{1+\frac{2ar\cos\theta-r^2\cos^2\theta}{k^2}}.$$

Treat $\frac{1}{k^2}(2ar\cos\theta-r^2\cos^2\theta)$ as a small quantity; that is, like σ where $\sqrt{1+\sigma}=1+\frac{1}{2}\sigma$ very nearly.

Having done this, use $2\cos^2\theta=\cos 2\theta+1$, and we find

$$l\cos\phi=k+\frac{ar\cos\theta}{k}-\frac{r^2}{4k}-\frac{r^2}{4k}\cos 2\theta.$$

Hence

$$x=-\frac{r^2}{4k}+r\sin\theta+\frac{ar}{k}\cos\theta-\frac{r^2}{4k}\cos 2\theta \quad \ldots\ldots \quad (2).$$

Now $r\sin\theta+\frac{ar}{k}\cos\theta=r\sqrt{1+\frac{a^2}{k^2}}\sin\left(\theta+\tan^{-1}\frac{a}{k}\right)$,

and the meaning of this is:—

Set off OT ahead of OS by the angle $SOT=OPC$; make ST perpendicular to OS; then the motion of Q is what a crank of length OT, and parallel to OT

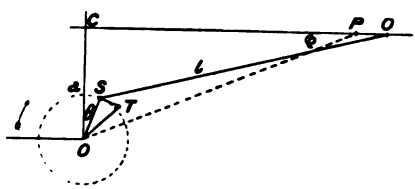

FIG. 279.

with an infinitely long connecting rod, would give it, if its centre were on the level of PC; but there is also an octave of the amount $-\frac{r^2}{4k}\cos 2\theta$. It will be seen that this octave is exactly in the same proportion to its fundamental as if the crank r with a rod k worked a slider directed towards O in its motion.

305. Now notice that if instead of Q having a horizontal motion from Q to Z, Fig. 280, it moves from Q to R or Q to N; QM being in the direction of the centre of the shaft. Instead of the direct displacement QM we have (drawing $MNRZ$ at right angles to QM and RS and NT vertical) displacements QN or QR, instead of QZ, and the horizontal components QV or QT, or QS or QZ are by no means equal. Hence the horizontal motion of any point in a link depends upon the direction of its path and this depends upon its **method of suspension.** Given the horizontal motions of the ends we easily find the horizontal motion of any point in the link, but we have no easy rule

as yet for finding the horizontal motions of the ends for every method of suspension. There is another important matter. The valve is not worked from an invariable point C in a link whose distances from the ends A and B are constant. It will be shown in Art. 329 that the

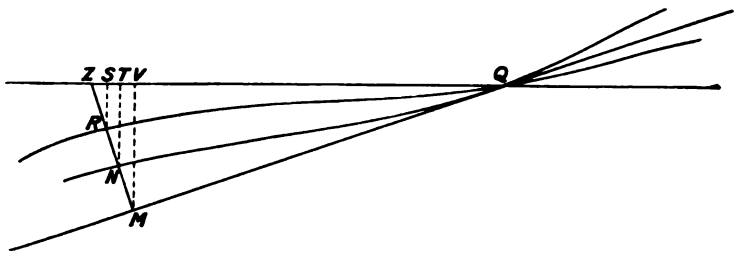

FIG. 280.

complication introduced by the **sliding of the block** in the link is not such a serious matter as the above one.

I hope that students will bear in mind the above considerations when studying the following rough and ready rules (the only ones known) for link motions in general, so that they may not imagine these rules to be more accurate than they really are.

306. Fig. 281 shows the **Gooch link motion.** If the forward Oa and backward Ob eccentric cranks are each 3 inches and each

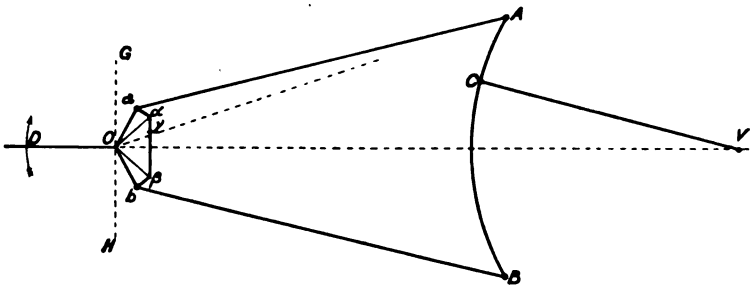

FIG. 281.

has 30 degrees of advance, that is each is 120 degrees from the main crank. Each of them is said to have 30 degrees of advance GOa or HOb, because in full forward gear the valve may be said to be worked by the forward eccentric alone and in full back gear the valve may be said to be worked by the back eccentric alone, the engine going the reverse way.

Draw the gear in *dead point position* with the crank away from

the cylinder. In this position see if the rods aA and bB are crossed or open. The figure shows open eccentric rods. Imagine the link AB to be so supported and the rods to be so long relatively to the link that A and B move horizontally; A gets motion from the eccentric Oa; B gets motion from Ob; the block C may be raised or lowered. It works the valve rod V in the direction OV and indeed

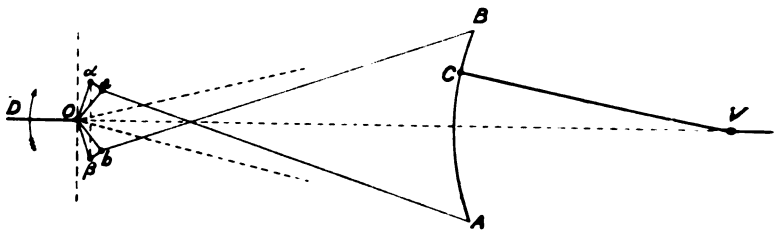

Fig. 282.

V gets the horizontal motion of C if the radius rod CV is held at a constant slope by the other parts of the gear.

$Oa = Ob = 3$ inches; $GOa = HOb = 30°$ Aa is perpendicular to Oa. aOa is made equal to AOV. $b\beta$ is found in the same way. Join $a\beta$ and divide in γ in the proposition in which AB is divided by C, then $O\gamma$ is the half travel of the valve in the present position of the gear and $GO\gamma$ is the angle of advance.

Notice that if the gear is shifted C being altered in position, our figure $aO\beta$ is not altered; we only alter the position of γ.

In Gooch gear with crossed rods, see Fig. 282, the student will find that Oa is now *behind* Oa by the amount AOV. There is no difficulty in seeing the reason for the rule used in the following example.

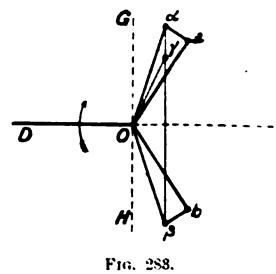

Fig. 283.

Let full fore and back half travels each be 3″, advances 40 degrees. Draw the gear *in the dead point position*. Set off $oa = ob = 3''$, $Goa = Hob = 40°$. Make $aoa = bo\beta = AoV = BoV$. Draw aa and $b\beta$ at right angles to oa and ob and so get a and β. Join them and divide $a\beta$ in γ the proportion in which C divides the link. Then $o\gamma$ is the half travel and $Go\gamma$ is the advance of the valve.

307. Stephenson Link Motion. Show it in dead point position and at mid gear.

I. *Open eccentric rods.* EXAMPLE, Fig. 284. Forward eccentric half travel 3″, advance 30°. Same for back. Make $oa = ob = 3''$, $Goa = Hob$

= 30°. In full forward or backward gear when A is lowered to C or B is raised to C the half travel and advance are really as represented by oa and ob. Let the student satisfy himself that this is so [and that it would be so also if the rods were crossed].

It is only then in intermediate positions, say half gear or mid gear, that we have to use our rule of Art. 303, which is of course a

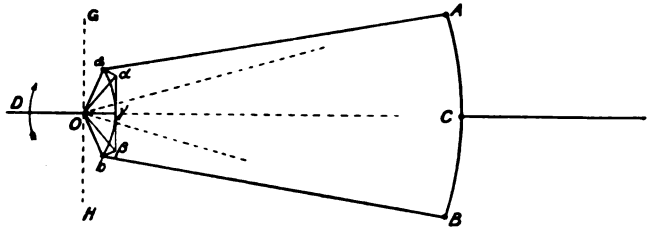

FIG. 284.

little tedious. Now we find it necessary to work out an answer carefully only in one intermediate position, say the mid gear position as shown. Our rule of Art. 303 comes evidently to this. Make $aoa = boβ = AOC$. Draw aa and $bβ$ at right angles to oa and ob. Join $aβ$ and bisect in γ. Then we have the following:

Answers. Full forward gear oa = ½ travel, Goa = angle of advance.
Full back gear ob = ½ travel, Hob = angle of advance.
Mid gear $o\gamma$ = ½ travel, 90° angle of advance.

Draw a curve, an arc of a circle say, through $a\gamma b$ and *assume* what must be nearly true, that if this *arc* ab be divided at any time in a point c in the proportion in which the link AB is divided by the block C then oc is the half travel and Goc is the angle of advance.

II. Work out in the same way the same example but with crossed eccentric rods.

In both cases test the following rule invented by Mr. Macfarlane Gray. We have given oa and ob, Fig. 284; join a and b by an arc of a circle whose radius is—

$$\frac{ab \times aA}{2AB}$$

ab being the straight distance from a to b. If the rods are open, the arc is concave to o. If the rods are crossed the arc is convex to o.

I am not sure that this or any other so-called easy rule is really easier than the above correct rule.

Let the student beware of refining too much on any of these constructions. He ought to remember that they are all approximate.

I have known men to talk learnedly about whether the arcs through a, γ and b in the above figures are arcs of circles or arcs of parabolas as if they were dealing with rules of infinite exactness.

308. Allan Link. This is more troublesome than either of the others. Draw the gear at dead point position, and in full forward gear. Find in each case by our rule of Art. 303 oa, Fig. 285, the half travel and Goa the angle of advance. In the same way find $o\beta$ for full back gear and $o\gamma$ or $o\gamma^1$ for mid gear. The rule has to be followed out in each case but having oa we know $o\beta$ unless the link is an unsymmetrical one. $o\gamma$ is the sort of mid gear answer one obtains if the rods are open and $o\gamma^1$ if crossed. Now draw an arc of a circle through $a\gamma\beta$ or $a\gamma^1\beta$ and for any intermediate position divide the arc in c as the block divides the link. Then oc is the half travel of the valve and Goc is the angle of advance.

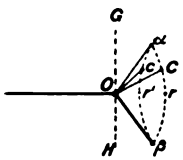

FIG. 285.

The Exercises of Art. 80, which every young student ought to work, will have taught what sort of change of distribution of steam we may expect by shifting any of the above link motions. The man who studies his results by the method of Art. 80 will possess what is sometimes thought to be very advanced knowledge of this subject.

309. General Remarks on Link Motions. Any arc of the link in the Stephenson motion has as its radius the distance to the centre of the eccentric disc. Any arc in the Gooch link has as radius its distance to the worked pin on the valve rod. There is a geometrical construction to find exactly the positions of the points G, K and F, Fig. 118, in the Allan Link. In all valve gears there is some such essential rule. Such rules need not be remembered: any man who can reason a little will work out such rules for himself if he will only remember the reason for them, which is this: When a gear is shifted there is one thing that must remain nearly unaltered—namely, the position of the valve at mid travel.

I do not think that anybody has yet given attention to the possibility of getting a good result by arranging that when the gear is shifted the valve's mid travel shall not be a symmetrical position over the ports, and yet careless constructors of gears sometimes, accidentally, benefit by the method. This is only one of many interesting problems which ought to be worked out with simple models.

The rules which I have given will only enable us to state rather roughly what occurs when the gear is shifted. We use them to help in designing the gear, and then we make a model or a skeleton drawing to show what the exact motion of the valve is. The following is a

drawing office method of making a **skeleton drawing**. It is desired to draw the motion of the valve full size or two or three times full size without showing the crank shaft and drawing arcs with radii so great as the eccentric rod lengths. Let ED, Fig. 286, be a position of the reversing link in which we wish to study the motion of V on the valve rod VR: we really move the main crank into say 24 positions and for each of these we find the position of the link and, therefore, the horizontal displacement of V. This means that having the arc DD' with E as centre, for each position of a and b (oC is the main crank, oa and ob the forward and back eccentrics) we strike out the two arcs AA', BB' with a and b as centres and the lengths of the eccentric rods as radii, and having these three arcs AA', BB', DD', we

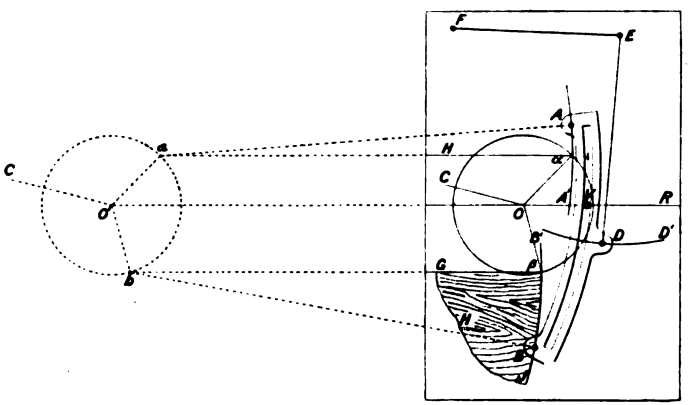

FIG. 286.

get a tracing of the link and place it on our drawing so that the points A and B and D are on the three arcs, and now we mark the position of V. The dotted part of Fig. 286 may be dispensed with. We draw oC, oa, $o\beta$ as if o were the crank shaft centre; oC the main crank and oa and $o\beta$ the two eccentrics in any one of say 24 positions. Now prepare a template like $GHJ\beta$ with an arc βJ drawn with a radius bB or aA and with a line on it $G\beta$ normal to the arc at β. Apply this template so that the point β on it is at β or a on the drawing, and $G\beta$ is horizontal, and evidently the arc $B'BJ$ or AA' may be drawn.

I may say that I do not like the method unless a better kind of template is prepared, because there is always great chance of error when we are asked to draw a line from a point that must be the corner of a set square or template.

310. We shall see in Art. 327 that the sliding motion of the block

in the link slot does not practically introduce any octave into the valve motion and therefore does not tend to produce inequality of distribution on the two sides of the piston. Although, therefore, its study is of no great importance in connection with steam distribution, it is important to try to diminish the sliding on account of wear and tear. The student ought to make skeleton drawings showing the actual motions during the revolution of an engine, of points at the ends and middle and half way between the ends and middle; 1st, when the link is suspended at the middle of the slot; 2nd, at the usual point near the middle; 3rd, at one end; 4th, half way between middle and one end. He will find that the first is best for engines expected to go equally well in both directions, and the 4th is best for an engine which is mainly expected to go in one direction. In fact the point of suspension ought to be near the position in which the link block most commonly works. This is what is usually said. It is on the

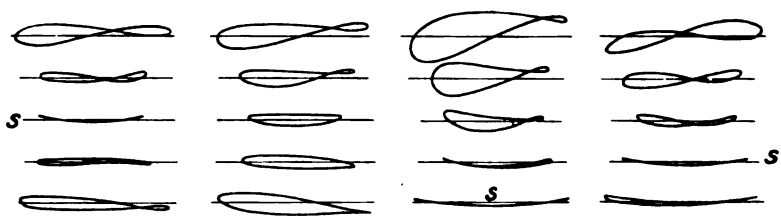

FIG. 287.

assumption that we want the valve to have a nearly pure simple harmonic motion, but I am not sure that this is what we ought to aim at.

Students must make their own drawings, but Fig. 287 illustrates my meaning. The paths of the suspension point *S* and four other points are shown for each method of suspension of a Stephenson link with open rods. In the second set the suspension point is really the middle of the chord of the link.

It is easy to draw the link when in mid gear in its positions for the two dead points. The line bisecting at right angles the distance between these two positions of the suspension pin is the **average position** of the suspension (or reversing) link for all positions of the gear, so that it is easy to get the best arrangement of *G*, Fig. 117, Stephenson, or of *C*, Fig. 119, Gooch. I am afraid that I do not believe much in giving more exact rules than these, nor do I believe in the mathematics with which we sometimes try to disguise the fact that we are trying to get rid of octaves in the motion, and these octaves

may be **very useful helps** and ought to be cultivated in the right direction rather than destroyed.

EXERCISE. Show that with the Stephenson link if the engine runs only one way we can greatly equalise the lead for different amounts of expansion by using unsymmetrical eccentrics. I give this exercise because it is a common exercise for students and will do no harm, but I cannot see why people should be anxious to effect this object.

311. Radial Valve Gear. In link motions and radial valve gear we have a link AB whose average position is at right angles to the direction of motion of the valve. The great difference between them is this; in link motions A and B get motions in the direction of the valve rod whose half travels are generally the same, their angles of advance being acute angles and equal for the two directions of motion; the point C which works the valve, shifting relatively to A and B when the gear is shifted; whereas in radial valve gears the advance of A is either $\pm$ 90°; that is, A is in + or − synchronism

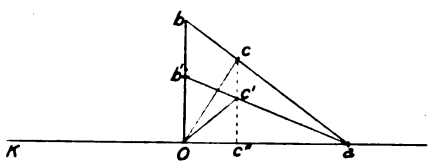

FIG. 288.

with the crank pin; B has an advance 0 but a variable half travel; the point C which works the valve never alters its position relatively to A and B.

In link motions angles must be carefully measured before we can even roughly approximate to the conditions, whereas in radial valve gears by an easy inspection we see the half travels, we know that the advances are 90° or 0, and we have no difficulty in making a rough approximation to the motion of the valve.

Thus for example, let C be between A and B. Then we know that A will have 90° advance, B has no advance.

Let KOa, Fig. 288, be the line of centres; let Oa be the half travel of A with its 90° advance; let Ob be the half travel of B with its no advance. Join ba and divide ba in c in the proportion in which C divides the link BA. Join Oc; then Oc is the half travel of the valve and boc is the angle of advance.

Let the gear be shifted so that Ob' is the half travel of B. Nothing else is altered. Join $b'a$ and divide as before in C''. Then

Oc' is the half travel of the valve and boc' is the angle of advance. Evidently all points like c c', &c., lie in a line at right angles to OA.

It is evident by drawing Zeuner Circles that in all radial valve gears as in the Gooch link the lead is constant.

312. I have given the general definition of all radial gears. There are several forms of radial valve gear which satisfy this definition :—

"There is a link AB, Fig. 289, whose average position is at right angles to the valve rod; A describes a closed curve more or less

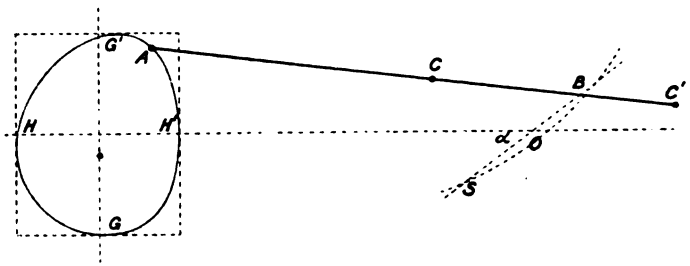

FIG. 289.

nearly circular or elliptic and B has a reciprocating motion; a point C between A and B or in AB produced works the valve."

Let the centre line of the engine and valve rod be vertical. Let $G'H'GH$ be the path of A; let the straight line BOS represent the average slope of B's path. Let it make an angle α with the horizontal.

Let A be at G' when the crank pin is in its lowest position and then C is between A and B.

Let A be at G when the crank pin is in its lowest position, then C is in AB produced.

It is evident that the following construction comes from the above rule.

(1) As in the **Hackworth, Marshall** and other gears where C is between A and B.

Draw lines hoa, Fig. 290, and bo at right angles. Make Oh equal to half the greatest horizontal dimension of the figure $G'HGH'$, say half of HH' (that is the distance between the extreme vertical tangents). Make Oa equal to half the greatest vertical dimension of $G'HGH'$, say half of GG'. Divide ao in c'' so that $oc'' : c''a = BC : CA$, and draw $c''c'c$ at right angles to Oa.

The gear is changed by altering the angle α. Set off $ohb = \alpha$;

join ba cutting $c''c'c$ in c. Join Oc; then Oc is the half travel and boc is the angle of advance.

(2) As in the **Joy** and other gears where C is in AB produced. The above description is correct, only that c is in ab produced: but perhaps it is better to write a new description.

Draw lines hoc'', Fig. 291, and bo at right angles. Make oh equal to half the greatest horizontal dimension of the figure $G'HGH'$, say half of HH'. Make oa equal to half the greatest vertical dimension of $G'HGH'$, say half of GG'. Divide ao produced in c'' so that $oc'' : c''a :: BC'' : C''A$ in Fig. 289 and draw $c''c'c$ at right angles to hoc''. The gear is changed by altering the angle a. Set off $ohb = a$. Join ab and produce to cut $c''c'c$ in c. Join oc, then oc is the half travel and boc is the angle of advance.

When one sees a new radial valve gear for the first time, say at a foreign railway station on a locomotive, one ought to look out for a

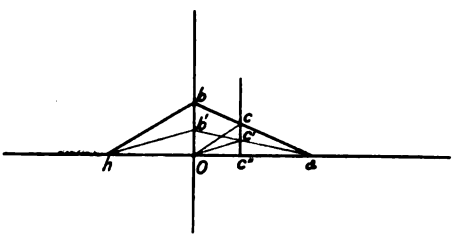

FIG. 290.

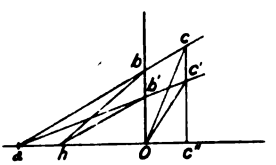

FIG. 291.

link ACB or ABC with the above mentioned characteristics. When it is found there is no difficulty in studying the motion.

313. In some engines in which the valve is worked by one eccentric there is a governor on the crank shaft which alters the half travel and the angular advance.

In one form, Fig. 292, the eccentric disc consists of two parts eccentric to one another and to the shaft; one is keyed on the shaft, the second is loose on the first. They are connected by links to rotating masses restrained by springs and a dash pot. When the engine goes too fast the masses move out from the centre and cause relative motion of the two parts of the disc so that the outer part becomes a disc of less eccentricity and more advance. It is easy to arrange that the change shall be much what it is in the Gooch link or in radial valve gear, giving a constant lead. In another form there is only one disc with a slot in it at right angles to the main crank, and the disc moves bodily relatively to the shaft when the governor masses move. In yet another form the eccentric disc A is rigidly attached to the straps B of a ring on another eccentric disc C keyed to the crank shaft. The masses of the governor cause a

rotation of B relatively to the shaft, and consequently the total eccentricity of A is altered, the effect being a change of travel and

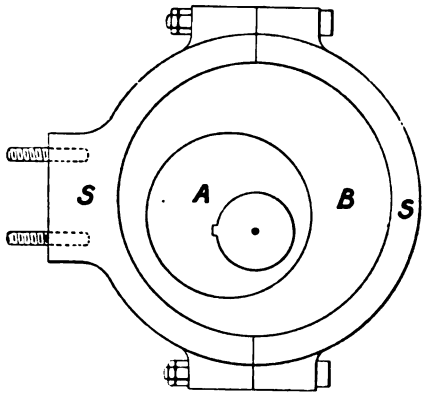

FIG. 292.

advance something like what is produced by a Stephenson link motion with open rods.

314. Independent Cut Off Slide as in Fig. 150. Let A and B, Fig. 293, be the middle points of the two slides. When at their mid positions A and B are on the line $ODCO$. Let $AC = y$ be the distance of the main or distribution valve to the right of its mid position and let $BD = x$ be the distance of the cut off slide from its

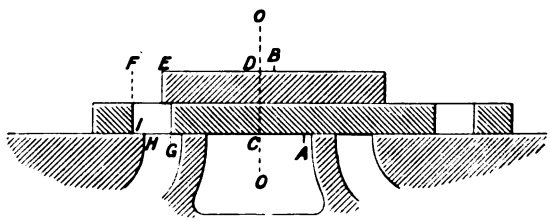

FIG. 293.—INDEPENDENT CUT-OFF. HOLLOW IN MAIN VALVE NOT SHOWN.

mid position. We have to find the position of the main crank of the engine when EF is just 0. Now

$$BE + EF - x = DF = CI = AI - y$$
$$\text{or } EF = AI - BE - (y - x)$$

The rule then is, to find the amount of opening EF; find $y - x$, the displacement of the distribution valve minus the displacement of the cut off valve, and subtract this from the known amount $AI - BE$.

The following construction gives us at once the value of $y - x$ for every position of the main crank.

Let the distribution valve have a half travel a and an angle of advance α. Let the lap be L and the inside lap l. Find the positions of the main crank at admission, cut off, release and compression as if no cut off valve existed. This is our easy example of Art. 76. We let AOA', Fig. 294, represent the centre line of the engine; DOD' is at right angles to AA'. DOB is the angle of advance. $OB = OC$ (in BO produced) is the half travel. Z and Z are the Zeuner circles on BO and OC as diameters; LL' and ll' are arcs with O as centre

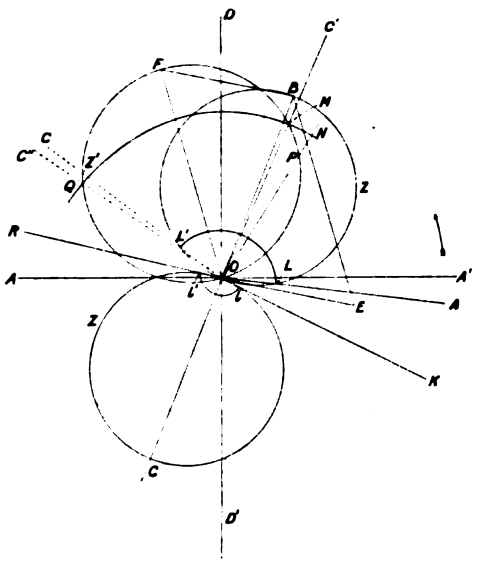

Fig. 294.

and radii the two laps. OLA, $OL'C$, $Ol'R$, OlK are the positions of the main crank at admission, cut off, release and compression.

Now we have to see how the cut off valve cuts off steam from the space I, Fig. 293, by EF becoming o, before the crank reaches the position OC, Fig. 294.

OB with the advance DOB works the distribution valve. At any instant the displacement produced by it was called y. Let OE with the advance DOE work the cut off valve; at any instant the displacement produced by it was called x. We want to find a crank which would produce a displacement $y-x$. Art. 301 tells us to make OB the diagonal of the parallelogram $OEBF$ of which OE is one side and OF is the crank required. On OF describe a Zeuner circle; we know that when the main crank is at OP moving in the direction of the arrow from the dead point OA', the distance OP represents $y - x$. Now describe the circular arc NMQ with a radius equal to $AI - BE$

of Fig. 293. It is evident that PN represents $AI - BE - (y - x)$ or EF and when this is O we have the real cut off at OMC'.

From OMC' to OQC'' the passage IG of the valve, Fig. 293, can receive no steam and so the cut off effected at OC by the distribution valve itself is a thing of no importance.

Note that OC'' must occur later than OC else we shall have a fresh rush of steam when the passage is uncovered, before the main cut off occurs.

The result arrived at is then that OA, OC', OR and OK are the positions of the main crank when the four important events occur.

The two usual ways of varying the cut off are (1) altering the throw OE; this is easily effected by a governor as is shown in Fig. 143; (2) altering the distance apart of the two blocks M and N, Fig. 150, which form the cut off valve (shown as one piece in Fig. 293), that is, altering the distance BE. If BE is lessened, $AI - BE$ or the radius ON, Fig. 294, is increased and OMC' is later.

When an engine is to reverse it is usual to work the distributing valve from a link motion either in full forward or backward gear, and for equal cut off in either direction, OE ought to have 90° advance.

It is quite easy for any student who is fond of elementary practical geometry to work ordinary exercises on this valve motion, if he really understands what I have here given.

EXERCISE. Distributing value, half travel 3 inches, advance 32°, lap 1·32 inches, inside lap 0·6 inch; show that the crank makes the following angles with the dead point, at admission ($-5°\frac{1}{4}$), release (161°·5) and compression (45°) and if no cut off valve existed, at cut off (121°·3). The cut off valve is worked by an eccentric with 90° advance and 3·12 inches half travel. The distance AI, Fig. 293, is 13 inches and the distance BE may be varied in the following way: show that we get the following as the positions of the main crank at true cut off.

Distance BE.	$AI - BE$.	Crank at real cut off.	Fraction of stroke before cut off, connecting rod infinitely long.
12·5	0·5	40°	·115
12·0	1·0	50°·5	·18
11·5	1·5	61°·5	·258
11·0	2	73°·5	·35
10·5	2·5	88°	·487
10·25	2·75	98°	·57
10·15	2·85	103°	·613
10·05	2·95	111°	·675
10	3	121°·3	·756

The distribution and cut off valves may be worked from two blocks at different positions in a Gooch link.

It is unnecessary to make here a special study of the motion of a valve worked from an eccentric, when the motions of valve and piston are not parallel, as this requires only a knowledge of elementary practical geometry.

Double ported and trick and other valves are easily seen to need no special study. There are cylinders with two exhaust and two steam ports, each pair having a slide valve worked by an eccentric or a link motion, or preferably the two steam ports have two slides, so that each slide when opening or closing its port shall be moving at its highest speed. These also require no special study.

315. Motion not Simple Harmonic. The motion of a valve worked by an eccentric is not exactly a simple harmonic motion; but it is very seldom indeed that the discrepance is of the slightest importance. If it were not pedantic I would say that we have simply to replace the straight lines $LL^1{}_1II^1$, &c., of Fig. 265, by flat arcs of circles.

When the valve is worked from a link motion or radial valve gear the discrepance may be so well marked as to be very beneficial or hurtful. It is interesting to know that motion of a valve worked by any of the gears is usually a simple harmonic motion, to which there is added on another of twice the frequency, an octave as the musicians call it. On this subject I must ask my readers to consult my book on the calculus. I have tried many ways of representing the motion, but I am afraid that there is none more instructive or easier than by drawing the two sine curves as in 4, Art. 297.

Thus if the distance of the valve to the right of its mid stroke when the main crank makes the angle θ with its dead point is y,

$$y = a_1 \sin(\theta + \epsilon_1) + a_2 \sin(2\theta + \epsilon_2)$$

expresses the motion. There is usually also a small constant term which I have not included. In well-designed gears this term is practically 0 in all positions. What is usually studied and what we have studied in Arts. 297–313 is the first part, where a_1 is the half travel and ϵ_1 the angle of advance if the motion were simple harmonic. But there is the octave term with a small half travel a_2 and an angle of advance ϵ_2. In all radial valve gears studied by me ϵ_2 is 90°, and a_2 can be found by easy inspection of the gear in any position. But in any case we can find a_1, ϵ_1, a_2, ϵ_2 from skeleton drawing measurements. I give some examples of this later on. Let us suppose that we know the results.

Draw circles with radii $OE_1 = a_1$, $OE_2 = a_2$; make the angles $GOE_1 = \epsilon_1$ the angle of advance, and $GOE_2 = \epsilon_2$. Divide the first circle at $E_1 a_1 b_1$, &c., into 24 equal parts, and BM into 24 equal parts, and project horizontally and vertically to get the sine curve. Divide $E_2 a_2 b_2 c_2$, &c., into 12 equal parts, and BM into 24 equal parts. In both cases begin with 0, and number the points 0, 1, 2, 3, &c., and projecting horizontally and vertically get the sine curve. Now add the ordinates of $ACPIA^1$ and DDD together to get the curve, whose ordinate is the true displacement y, distances from B meaning angles or positions of the crank. We can now draw the outside and inside lap lines as in Fig. 261, and get the positions of the main crank when admission, cut off, release, and compression take place. When we use this sine curve method of working, the exact effect of the octave is at once evident. Thus let a student having drawn $ACPIA^1$, as in Fig. 295, now draw DDD on a piece of tracing paper,

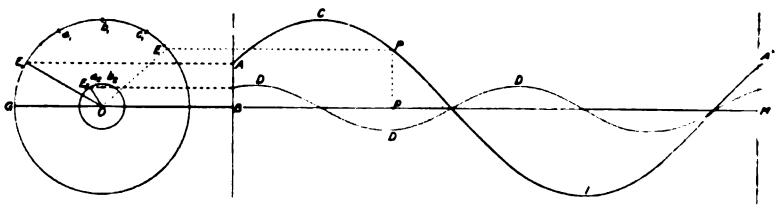

FIG. 295.

and let him notice the different effects produced by sliding the tracing paper (in fact altering ϵ_2) on the compound curve, and on the cut off at either end of the stroke. In most radial valve gears ϵ_2 is nearly $\frac{\pi}{2}$. Hence the octave comes as in Fig. 296.

If we have no octave as in Fig. 261, or here in the dotted curve F, Fig. 296, it will be seen that the crank is in the same positions in both strokes when the valve is at the same distance from mid stroke. The existence of the octave changes this, and this is the reason why all link motions and radial valve gears tend to cut off earlier in one stroke than the other. Terms in 3θ or 5θ would have no such effect; the effect is due to terms in 2θ and 4θ, but practically we need only consider the fundamental term in θ, and the octave or term in 2θ. This will become clearer if we consider a radial valve gear, in which I have found the motion for a certain grade to be given by

$$y = 3 \sin (\theta + 57) + 0{\cdot}3 \cos 2\theta$$

In Fig. 296 BM represents θ from 0 to 2π, the ordinate from BM

to the sine curve FF represents 3 sin $(\theta + 57)$. The sine curve GG represents 0·3 sin 2θ. The ordinates of FF and GG being added

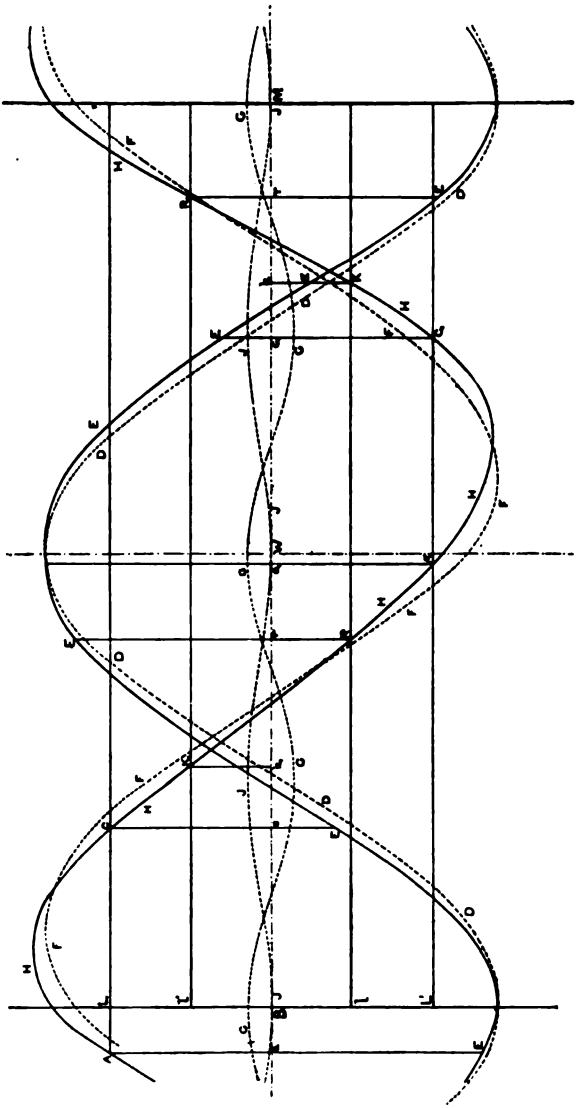

Fig. 291.

together, we have y represented as the ordinate of the curve $AHHH$.

The distances BL and Bl represent the lap and the inside lap respectively, and BL^1, Bl^1 are the laps for the other end of the

cylinder. In this case I have made $BL = BL^1$, and $Bl = Bl^1$. Drawing lines as shown, we see the effect of the octave in causing the admission a, and cut off c to occur earlier, and the release r and compression k later for one side of the piston, whereas for the other side a^1 and c^1 are later, and r^1 and k^1 earlier than when there is no octave.

On the same figure the ordinate of the curve EEE shows the displacement of the piston from the middle of its stroke for each

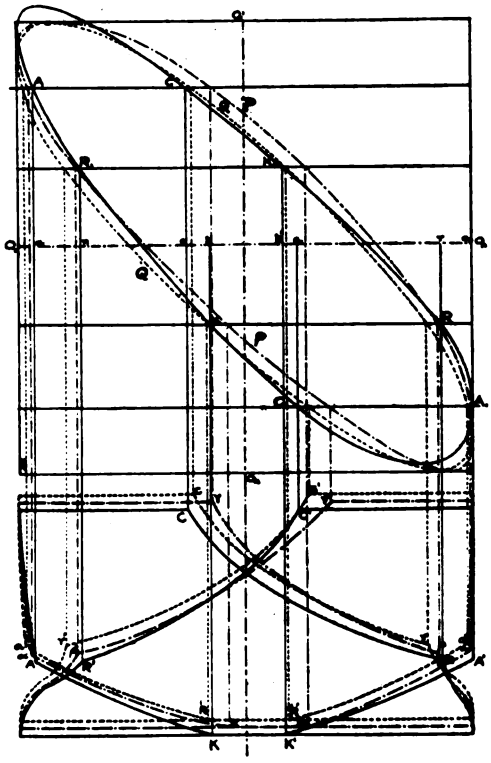

FIG. 297

position of the crank (connecting-rod five cranks long). The dotted line DDD, which we shall not use, represents what the piston displacement would be if the connecting-rod were infinitely long. These displacements are aE, cE, rE and kE for the admission, cut off, release and compression on one side of the piston, and a^1E, c^1E, r^1E, $k^1\epsilon$ for the other side of the piston.

I have shown the same results by the **oval diagram method** Fig. 297. The ordinates and abscissæ of the curve CK^1RC^1A represent displacements of the valve to the right of its mid stroke,

and of the piston from the end of its stroke, and they are measured from Fig. 296. The distance Aa or Cc is the lap, and rR or kK is the inside lap. The dashed letters are for the other side of the piston. The student sees how we arrive at the hypothetical diagrams $ACRK$ and $A^1C^1R^1K^1$ for the two ends of the cylinder. He will do well, however, to see what diagrams (drawn here as $acrk$ and $a^1c^1r^1k^1$) he obtains if he uses the ellipse QQ, which represents the valve and piston motions as simple harmonic motions, and also the diagrams (drawn here as $a\gamma\rho\kappa$ and $a^1\gamma^1\rho^1\kappa^1$) if he uses the oval curve PP, which represents the valve motion as simple harmonic, but the true motion of the piston. In the present case he will see that the octave in the valve motion produces inequality of distribution on the two sides of the piston of much the same kind as that due to the shortness of the connecting-rod, and he will note that we usually have power to cause these to coalesce or to oppose one another. In the present case, if both motions are simple harmonic, there is symmetry, see c and c^1; but if the valve motion is simple, the shortness of the connecting-rod makes γ^1 earlier than γ; to counteract this and get C^1 later than C the octave in the valve motion is very useful. The effect of angularity of the connecting-rod is sometimes opposed by giving different amounts of lap and of inside lap to the two sides of the valve.

EXERCISE. Show that when we equalise the points of cut off and of release or compression by inequality of the lap and inside lap, we do not equalise the other two important events for the two ends of the cylinder; or, that if the leads are made equal, the points of cut off are unequal. It is not difficult, however, to show that a good approximation to equality in both may be produced if we drive the valve through a bell crank lever.

316. Fourier Analysis. I have in Art. 302 shown how we combine simple harmonic motions. Suppose that by a skeleton drawing method or by means of a large model we get the displacement of a slider for each of many positions of a crank; it is, in my opinion, essential for a scientific study of a valve motion, to express the displacement in terms of a fundamental simple periodic motion and its harmonics, the octave being the most important. I here give an example to illustrate how this may be done in any case. The whole of the work is shown in the table, page 513, although the example is one in which we are looking for a fundamental term and its three harmonics, each with an amplitude and a lead or lag.

In the table the displacement y, of a valve from a fixed point, is given for 24 different positions of the crank.

To obtain the displacements of the valve from its mean position, find the average of all the 24 values of y (in this case I find 5), and subtract this from each.

The resulting values, y', are given in column A. Our aim is to express the valve's motion in terms of the position of the crank θ by a Fourier series. We really never need more than two terms, but I shall here consider four.

$$y' = a_1 \sin(\theta + \epsilon_1) + a_2 \sin(2\theta + \epsilon_2) + a_3 \sin(3\theta + \epsilon_3) + a_4 \sin(4\theta + \epsilon_4)$$

Let the student imagine θ and y' to be plotted (from $\theta = o$ to $\theta = 360°$) on squared paper. Then if one half of the curve from 180° to 360°, is superposed on the other half from 0° to 180°, the 1st, 3rd, 5th, &c., components in the above expansion will be eliminated [this is easy to see if these components be drawn separately], and the resulting curve will be :—

$$y' = 2[a_2 \sin(2\theta + \epsilon_2) + a_4 \sin(4\theta + \epsilon_4)]$$

Similarly, if the original curve be divided into three equal portions by lines perpendicular to the axis of θ, and the three parts superposed on each other, the 2nd, 4th, 6th, &c., components will be eliminated, and the resulting curve will be :—

$$y' = 3a_3 \sin(3\theta + \epsilon_3).$$

It is an easy exercise for the student to prove this either graphically or analytically. If he has difficulty let him consult Mr. Wedmore's paper in the *Proceedings* of the Institution of Electrical Engineers, 1896, or General Sir R. Strachey's paper in the *Proceedings* of the Royal Society, May, 1886.

The table shows how the above method is employed without actually drawing the curves. For instance, columns A, I, and J are the three equal parts superposed, and when added give column K which is three times component 3. In this case zero.

An examination of the table easily shows how it is all produced.

Component 1. Imagine column N to be continued to the top of the table; ordinate 0 will be + 2·520; average of ordinates, from ordinate 0 to 11 inclusive, treating all as positive, is 22·900 ÷ 12 = 1·908. We use this method of finding a_1 because of the rule ;—

Maximum ordinate $a_1 = 1{\cdot}908 \times \frac{\pi}{2} = 2{\cdot}997$, say 3.

To get ϵ_1, $$\frac{\sin \epsilon_1}{\sin 90°} = \frac{2{\cdot}5161}{2{\cdot}997} = {\cdot}8395$$

$$\therefore \epsilon_1 = \sin^{-1} {\cdot}8395 = 57°9', \text{ say } 57°.$$

Component 2. By inspection of column *H*, the maximum ordinate

$$a_2 = \cdot 50 \text{ and } \epsilon_2 = 90°.$$

Component 3. Zero. See Column *K*.

Component 4. Average of ordinates from 0 to 2 inclusive $= \cdot 1725 \div 3 = \cdot 0575$.

Maximum ordinate $a_4 = \cdot 0575 \times \frac{\pi}{2} = \cdot 091$.

By inspection $\epsilon_4 = 0$.

Hence $y = 5 + 3 \sin(\theta + 57°) + \cdot 5 \cos 2\theta + \cdot 09 \sin 4\theta$ is the required expression.

$\theta°$	No. of ordinate.	y	A	B	C	D	E	F	G	H
			y' or $y-5$.	This is A superposed on itself.	A+B.	Or half of C being sum of comp. 2 and 4.	Being D superposed on itself.	Being D and E.	Being half of $r =$ comp. 4.	Being D − G or comp. 2.
0	0	8·02	3·02	−2·02	1·00	·50	−·50	0	0	·50
15°	1	8·37	3·37	−2·33	1·04	·52	−·345	·175	·0875	·4325
30	2	8·33	3·33	−2·66	0·67	·335	−·165	·170	·085	·250
45	3	7·93	2·93	−2·93	0	0	0	0	0	0
60	4	7·34	2·34	−3·01	−0·67	−·335	+·165	·170	−·085	−·250
75	5	6·71	1·71	−2·75	−1·04	−·52	+·345	·175	−·0875	−·4325
90	6	6·13	1·13	−2·13	−1·00	−·50			0	−·50
105	7	5·58	0·58	−1·27	−0·69	−·345			·0875	−·4325
120	8	4·99	−·01	−0·32	−0·33	−·165	G continued		·085	−·250
135	9	4·38	−·62	0·62	0	0	downwards.		0	0
150	10	3·80	−1·20	1·53	+0·33	+·165	☞		−·085	+·250
165	11	3·34	−1·66	2·35	+0·69	+·345			−·0875	+·4325
180	12	2·98	−2·02					·50	−2·520	
195	13	2·67	−2·33					·52	−2·850	
210	14	2·34	−2·66	M continued upwards ☞				·335	−2·995	
225	15	2·07	−2·93					0	−2·930	
								−·335	−2·675	
240	16	1·99	−3·01	−·01	3·02	0		−·52	−2·230	
255	17	2·25	−2·75	−·62	3·37	0		−·50	−1·630	
270	18	2·87	−2·13	−1·20	3·33	0		−·345	−0·925	
285	19	3·73	−1·27	−1·66	2·93	0		−·165	−0·155	
300	20	4·68	−0·32	−2·02	2·34	0		0	0·620	
315	21	5·62	0·62	−2·33	1·71	0		+·165	1·365	
330	22	6·53	1·53	−2·66	1·13	0		+·345	2·005	
345	23	7·35	2·35	−2·93	0·58	0			A − D	
mean ordinate	5			being A superposed.	being A superposed.	A+I+J being 3 times component 3 which is 0.		D repeated.	being components 1 and 3 or comp. 1 only.	
			A	I	J	K		M	N	

Now in a valve motion we have no elaborate work like this. For example, with the numbers measured from a skeleton drawing: Subtracting the average, superposing and dividing by two we get at once the results given.

317. EXERCISE. Make a skeleton drawing of a **Hackworth** (or Angstrom) gear (straight slot) as in Fig. 298. $OA = 3$ inches; eccentric rod AB 18 inches; $BC = 7\frac{3}{4}$ inches, and show that, for the following values of α (when α is negative the rotation is against the hands of a watch) we have the following results obtained by my students for the vertical motion of C. I may say that the octave advance is difficult to find exactly when the octave is small; errors of 15 or 20° are easy to make.

α	FUNDAMENTAL MOTION.		OCTAVE.		USUAL RULE OF ART. 312.	
	Half travel.	Advance.	Half travel.	Advance.	Half travel.	Advance.
Full forward 25°	1·51	59°	·04	90°		
Full backward −25°	1·51	59°	−·04	90°	1·47	56°

Following the rule of Art. 323 it is easy to see that we ought to get the following results. An octave with a + amplitude is one like

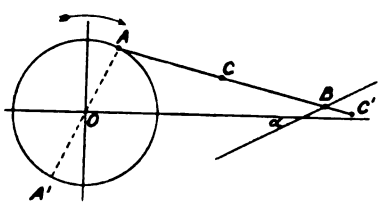

FIG. 298.

what is shown in Fig. 296, which would produce earlier cut off on the side of the piston remote from the crank. In every case the amplitude of the octave is, roughly

$$\frac{AC}{AB}\frac{r^2}{4l}\tan\alpha \text{ or } 0{\cdot}071\tan\alpha$$

It is evident that this is practically negligable. If α is 25°, $\tan\alpha = {\cdot}4663$ and the amplitude of the octave is ± ·033 inches. It will be noticed that my students get ± ·04, but it is so small that discrepance was certain to occur.

318. EXERCISE. Hackworth (or **Marshall** or Bremme) with slot of radius $13\frac{1}{2}$ inches, its centre being at the end N of an arm of $13\frac{1}{2}$ inches long, the other end of which is fixed at B', Fig. 124. The other dimensions as in the first case with straight slot. Obtain the following information from a skeleton drawing. a is the angle which the arm NB' carrying the centre N makes with the vertical in Fig. 124.

a	Fundamental Term.		Octave.	
	Half travel.	Advance.	Half travel.	Advance.
Full forward 25°	1·54	57°	·15	90°
Full backward −25°	1·53	59°	·11	90°

Following the rule of Art. 323 we find the nearly negligable octave to be 0·071 tan a, as in the last case, together with $+\frac{AC}{AB}\frac{1}{6}\sec^3 a$ of Art. 322 or altogether

$$\tfrac{1}{6}\sec^3 a + 0{\cdot}071 \tan a$$

If a is 25°, the amplitude of the octave in full forward gear is

$$\cdot 128 + \cdot 033 \text{ or } \cdot 161 \text{ inches.}$$

Whereas in full backward gear it is

$$\cdot 128 - \cdot 033 \text{ or } \cdot 095$$

Here again the discrepances from actual results are negligable.

EXERCISE. The student will do well to take $a = \pm 25°$ in full forward and back gear, making the curvature of the slot convex to

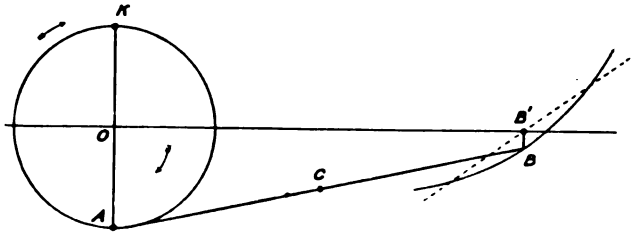

FIG. 299.

the cylinder and keeping to the above dimensions, but letting the eccentric be with the crank instead of being 180° ahead of it;

working the valve from a point C' in AB produced, and finding y the downward displacement of the value in full forward and back gear for any angle θ passed through by the crank from the dead point position nearest the cylinder. Should he by mistake leave the curvature of the slot concave to the cylinder he will be interested in noting the very different way in which his octave occurs.

319. EXERCISE. **Joy gear,** Fig. 300.

Crank OP 8 inches, connecting rod KP 40 inches, DP 14 inches,

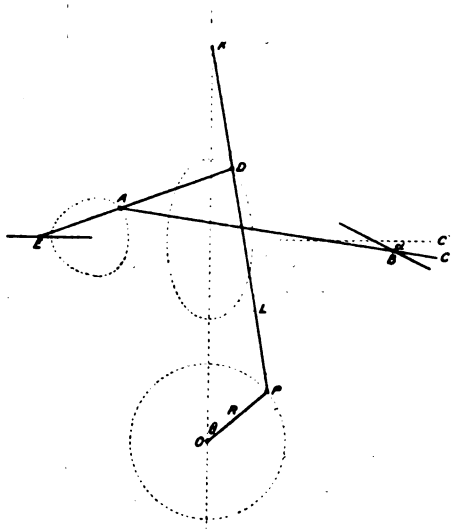

FIG. 300.

AB 16 inches, BC 8 inches, DE 24 inches, DA 8 inches. Radius of path of B 12 inches.

Taking $\alpha = 25°$ as full forward gear, find y the downward (Fig. 300) displacement of C when the crank makes θ with the dead point nearest the cylinder.

Answers. Answers obtained by my students:—

1. When the curved slot is concave towards the valve

$$y = 2{\cdot}55 \sin (\theta + 36°) + {\cdot}35 \cos 2\theta$$

2. When the slot is straight

$$y = 2{\cdot}3 \sin (\theta + 35°) - {\cdot}15 \sin 2\theta$$

3. When the curved slot is convex towards the valve

$$y = 2{\cdot}18 \sin (\theta + 36°) - 0{\cdot}35 \cos 2\theta$$

The student will note that the curved slot must be concave towards the valve to give an earlier cut off in the down stroke. The other form aggravates the evils due to the weights of moving parts and angularity of connecting rod.

I will now proceed to give some rules as to the production of the octaves in valve motions.

320. Propositions concerning the **Creation of Octaves.**

I. Prove that if there are three points ACB in a straight line keeping their distance apart; if a and b are the displacements of A and B resolved in any particular direction, the displacement of c in the same direction is

$$c = a\frac{CB}{AB} + b\frac{CA}{AB}$$

In my book on Applied Mechanics, I show that if from a point O we draw OA'' and OB'' to represent in clinure and magnitude the displacements of A and B; join $A''B''$ and divide $A''B''$ in C'' in the

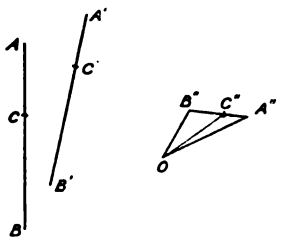

FIG. 301.

proportions in which the link is divided in C; then OC'' shows the clinure and magnitude of C's displacement.

By projecting these displacements on a line in any direction from O, the above proposition is proved.

II. In any standard position of ACB let parallel rectangular co-ordinate axes be drawn through A, C and B, and let these points at any time be at the distances x_1, y_1; x, y; x_2, y_2 from their respective axes;

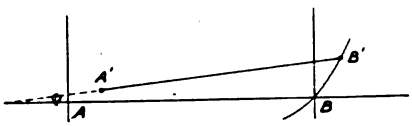

FIG. 302.

the proposition I. may be used to find x and y from x_1, x_2 and y_1, y_2.

III. If the motion of A is known and if the path of B's motion is known we can find the motions of B and of C.

Choose the initial position of AB as the common axis of x_1 and x_2 and let $AB = l$. Let ϕ be the angle which the link A^1B^1 makes with the standard position AB.

$$l \sin \phi = y_2 - y_1$$

$$l \cos \phi + x_1 = l + x_2$$

y_2 is a known function of x_2

Then $$\left(\frac{y_2 - y_1}{l}\right)^2 + \left(1 + \frac{x_2 - x_1}{l}\right)^2 = 1$$

and from this y_2 and x_2 may be found in terms of y_1 and x_1.

We shall in future neglect small terms.

IV. If A the end of a long rod, AB of length, $AB = l$ has a simple harmonic motion, in what I shall call the vertical direction AOA^1.

Such that $$OA = y = a \sin qt.$$

where a is small compared with l; and if B has motion at right

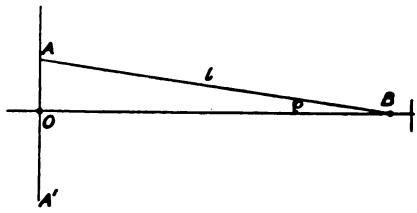

FIG. 303.

angles to AOA^1 in the direction OB, which I shall call horizontal, what is B's motion?

$$OB = l \cos \phi$$

$$OA = a \sin qt = l \sin \phi$$

$$\cos \phi = \sqrt{1 - \frac{a^2}{l^2} \sin^2 qt}$$

$$OB = l \sqrt{1 - \frac{a^2}{l^2} \sin^2 qt} = l - \frac{a^2}{2l} \sin^2 qt$$

since $\frac{a^2}{l^2} \sin^2 qt$ is supposed to be always small; now

$$\sin^2 qt = \tfrac{1}{2} - \tfrac{1}{2} \cos 2qt$$

so that $$OB = l - \frac{a^2}{4l} + \frac{a^2}{4l} \cos 2qt$$

which is a S. H. motion of amplitude $\frac{a^2}{4l}$, the middle point being at a distance from O equal to $l - \frac{a^2}{4l}$.

A very little thought will show that however the S. H. motion of A may be stated (that is, from whatever instant we may count time) B is at the ends of its stroke when A is at either end or the middle of its stroke.

If we take $OA = a \sin(qt + \epsilon)$ it is easy to see that

$$OB = l - \frac{a^2}{4l} + \frac{a^2}{4l} \cos 2(qt + \epsilon)$$

Hence if $\epsilon = 90°$ so that if $OA = a \cos qt$

$$OB = l - \frac{a^2}{4l} - \frac{a^2}{4l} \cos 2qt$$

Notice that if the motion of A has a small harmonic, the effect of this is a very greatly reduced octave of it in B's motion, and it may usually be neglected.

If motion of B to the right of its mid position be called positive, when is the positive displacement of B greatest? *Answer.* When A is at its mid stroke; half way up or half way down.

If O is not the middle point in A's motion, it will be found that B's motion has the frequency of A with an octave.

V. In the case of IV.; every point in AB has a vertical simple harmonic motion synchronous with A's motion and proportional to its distance from B.

VI. Any kind of periodic motion of the same period as A's may be given to B by letting the path of A be a curved path.

VII. Whatever be the actual path of A, if it has a symmetrical simple harmonic vertical motion, so that $y = a \sin qt$; the vertical motion of any point in AB follows the rule V.

VIII. If A has a small horizontal periodic motion, $x_1 = f(t)$, B's motion is what it was before; but in addition it has the horizontal motion of A, or B's displacement is

$$OB = l - \frac{a^2}{4l} + \frac{a^2}{4l} \cos 2qt + f(t)$$

IX. If A describes a circular path of radius r with uniform speed. Let the angle that OA makes with the upward drawn vertical from O at any instant be called θ.

$$x_1 = r \sin\theta, y_1 = r \cos\theta$$

or counting time from when θ is 0

$$x_1 = r \sin qt,\ y_1 = r \cos qt.$$

Therefore $$OB = l - \frac{r^2}{4l} + r \sin qt - \frac{r^2}{4l} \cos 2qt.$$

Of course OB expresses the motion of a piston if the connecting rod is of length l and the crank is r.

X. If A describes a path such that

$$x_1 = a_1 \sin qt + m \sin (2qt + \epsilon_1)$$

$$y_1 = b_1 \cos qt + n \sin (2qt_2 + \epsilon_2)$$

$$OB = l - \frac{b_1^2}{4l} + a \sin qt + m \sin (2qt + \epsilon_1) - \frac{b_1^2}{4l} \cos 2qt.$$

XI. If in X. instead of B's path being straight and horizontal it is still straight, but makes an angle a with the horizontal; its mid point being as before in the horizontal from O. Neglecting small terms, the horizontal motion of B is the same as before, and if x_2 is its horizontal distance from the mid point and y_2 its vertical distance,

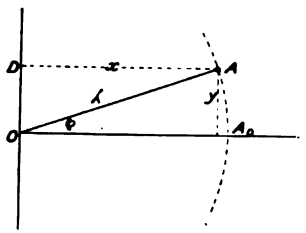

FIG. 304.

$$y_2 = x_2 \tan a.$$

Thus the octave in y_1 does not play any part in B's motion, a most important fact to remember.

XII. If A has a vertical displacement from A_o equal to $y = a \sin qt$ and is centred about the point O, OA being λ which is great compared with a and OA_o is horizontal, find x or AD. $\lambda \cos \phi = x$, $\lambda \sin \phi = y = a \sin qt$.

$$x = \lambda \sqrt{1 - \frac{a^2}{\lambda^2} \sin^2 qt} = \lambda - \frac{a^2}{4\lambda} + \frac{a^2}{4\lambda} \cos 2qt$$

That is, the horizontal motion of A is simple harmonic of half the period or twice the frequency of the vertical motion.

Hence, if instead of B's path being horizontal it is in the arc of a circle, whose average direction is horizontal as in Fig. 305, it is evident that in moving from M to P, this up and down motion is very nearly a simple harmonic motion which will be exactly reversed if the dotted path is followed.

XIII. If instead of B moving in the straight path of XI. it moves in an arc of a circle, Fig. 306, with the average slope a and radius λ,

the upward motion of B is what it was in XI. together with what it would be if the average slope of the arc of the circle were O multiplied by sec. α. That is, if the fundamental part of the horizontal motion has an amplitude a, the vertical motion is $x_2 \tan \alpha +$ an octave of amplitude $\frac{a^2}{4\lambda} \sec. \alpha$, if λ is great compared with a.

XIV. To illustrate how octaves may be created or destroyed by a reversing lever. The ends of a link A and B, Fig. 307, move in the straight lines CB, CA; if B has a simple harmonic motion along BC what is A's motion? The easiest way of putting this is:—If AC be called horizontal, B has a simple harmonic motion of amplitude b, say, which is of amplitude $b \cos \alpha$ horizontally (and this motion A

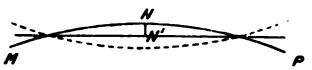

FIG. 305.

FIG. 306.

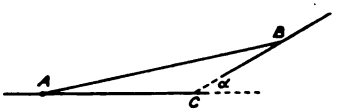

FIG. 307.

has also) together with one of amplitude $b \sin \alpha$ vertically. Now such a vertical motion (see Proposition IV.) of B produces an octave in A whose amplitude is $\frac{6^2 \sin^2 \alpha}{4 \cdot AB}$ together with a fundamental which I shall here neglect. We see therefore that a simple harmonic motion in either A or B produces a simple harmonic motion in the other, together with an octave whose amount depends upon the angle α. If the path of A or of B is a short arc of a circle we have practically the same effect. So that either A or B may be the end of a bell crank lever.

321. It is of no use paying particular attention here to the actual signs of the terms. No student can remember them, but it is evident that in all vertical and horizontal motions of the guided pins in links whose average directions are parallel to or at right angles to the line of centres, being driven by a uniformly rotating crank, we have fundamentals of the same period which are in + or − synchronism or are $\frac{1}{4}$ period apart, that is, they can be expressed all as $\pm \sin qt$ or $\pm \cos qt$ with amplitudes quite easy to find, together with octaves which reach their positive or negative maxima when qt or θ is o, that is,

when the driving crank is in the direction of the line of centres. Any point intermediate therefore between two guided pins has a vertical or horizontal motion intermediate between $\pm \sin qt$ and $\pm \cos qt$. Say $a \sin (qt + e_1)$ together with an octave $\pm a_2 \cos 2\ qt$. If this is the motion of a slide valve we see from Fig. 296 the nature of the distribution of steam caused by it; we see that the gear may be arranged to admit steam longer at one end of the stroke than at the other, that we may cause it not merely to counteract the effect of the angularity of the connecting rod, but to more than counteract it. We saw that a single eccentric on a modern vertical engine where the cylinder is above the crank, gives more admission in the down stroke because of the angularity of the connecting rod, whereas we want just the opposite effect on account of the downward acting weights of moving parts. This may be counteracted to some extent by giving more lap on the upper side of the valve, but it may also be done by getting a proper octave in the valve gear.

I have here given **the general principles** which guide us in the study of any such gear. Unless as part of one's routine drawing office work it is hardly necessary to apply these principles to the detailed study of any particular gear. I am inclined to think that instead of solving puzzles in this way, it is better to make a skeleton drawing, to measure the displacement of the valve for equal angles passed through by the crank; calculate the fundamental and octave by the rule of Art. 316, now alter the gear and repeat, thus seeing how the alteration affects the octave.

Although I dislike the study as a misuse of one's faculties, I will indicate here how some such gears may be taken up.

322. Radial Valve Gear. The Octave. If the above principles are remembered it will be found that an easy (although possibly a slightly tedious) inspection of a radial valve gear gives the octave. In the Hackworth, Fig. 299, with **curved slot** at B, or its equivalent with the swinging link or in the Joy gear, the vertical motion of C is practically that of the valve, and in so far as the octave part is concerned it is the fraction $\frac{AC}{AB}$ of the vertical octave in B.

The crank being at OK and piston in highest position the eccentric is at OA, let us say, and the valve would be in the condition which we studied in Art. 312 (neglecting the octave which the straight slot would also have), only for BB^1 which is evidently the amplitude of the octave; this then gives us at once Fig. 296, and when the engine is reversed we have the same effect. Whereas, if the slot had been

curved with the concavity downwards, the other way, we should have had just the opposite effect, the octave being negative in the top position of the piston.

The octave is a maximum at a dead point. It is easy to see in the same way that if C is in AB produced, as it is in the Joy gear and in varieties of the Hackworth (called often Marshall or Bremme) gear, when the eccentric is with the crank and not 180° ahead of the crank, we have just the opposite rule as to curvature. A slot convex towards the cylinder gives an octave like that of Fig. 296, giving earlier admission and cut off on the side of the piston remote from the crank.

In all cases we may take it that roughly the octave produced by the curvature is $\frac{AC}{AB} \cdot \frac{r^2}{4R} \sec^3 \alpha$, if r is the eccentric radius and R is the radius of the slot or curved path of B and α is its average inclination to the line OB', Fig. 299. This rule is not very exact if α is much greater than 20° as new harmonics then come in, but these are easy enough to study. It will be found that this is practically the whole of the octave to be studied in the Hackworth gear. Of course we can create another octave by using a short rod connecting C with the valve rod. Indeed I feel that I ought to have said more about this rod, but the octave produced by its shortness is easily stated by Proposition IV. to be $\frac{r^2}{4\lambda} \sin (2\theta - 90°)$ if λ is the length of the rod. It counteracts the effect of a slot concave to the cylinder.

When we know that a slider in an engine has a simple harmonic motion in any direction, we settle on what we shall call the positive side of the motion: 1st, we find a the amplitude; 2nd, we find what is the displacement when the crank is at dead point (I always take the inner or cylinder side dead point). If we call this $a \sin \alpha$ then the displacement is

$$a \sin (\theta + \alpha)$$

in the positive direction.

Instead of the second measurement above, I sometimes find as my second measurement the position θ of the main crank when the positive displacement first reaches its highest value. This is often a much easier thing to do if we have the engine before us and we can turn it round; if this is θ', then what I have called α above, is $90 - \theta'$.

323. Now let us consider any gear, say the Hackworth, Fig. 298, with straight slot.

I. In vertical or horizontal motion, A has no octave.

II. Horizontal motion of B; positive distances are measured to the left of mid position.

1st. B has A's horizontal motion considered in VII., Art. 320.

2nd. B has a horizontal motion due to A's vertical motion. See IV. of Art. 320. Its amplitude is $\frac{r^2}{4l}$ where $l = AB$, and it reaches its maximum value when A is at the top or bottom.

III. Downward vertical motion of B. This is the horizontal motion multiplied by tan α. For the octave part its amplitude is $\frac{r^2}{4l}$ tan α and it reaches its maximum downwards when A is either at the top or the bottom.

IV. The downward fundamental motion of C we have studied in Art. 312. The octave has an amplitude $\frac{AC}{AB} \cdot \frac{r^2}{4AB}$ tan α, and reaches its maximum when A is highest or lowest, that is, whether A is 180° from the main crank or is synchronous with the main crank. In the one case C is between A and B. In the other case it is in AB produced, but this is of no consequence. In both cases we evidently have the octave coming as in Fig. 296.[1]

324. Let us take the **Joy gear with straight slot.** I assume that students know the Joy gear, Fig. 300, that the path of D is like an ellipse, the lower end of which is blunter than the top, and also that they have noted the character of A's path. The study of D's motion is the best preparation for the study of A's.

The centre line of engine in the figure is vertical. Positive vertical displacement is downwards. Positive horizontal displacement is to the right.

1st. Let E have only a horizontal motion and let B move in a straight slot. We seek for the octave only. What is the amplitude of C's vertical motion, and when is it a maximum downwards? Or when P is at its dead point, nearest K, what is C's displacement downwards?

I. (1) D horizontally has no octave. Vertically its fundamental motion is that of P; vertically downwards D has K's octave diminished, or an amplitude $\frac{DP}{KP} \frac{K^2}{4L}$, and it is at its maximum downwards when θ is 90.

[1] Mr. Harrison, whose excellent paper (*Proc.* Inst. C.E., 1893), ought to be referred to, has pointed out to me that the octave due to the shortness of rod AB, Fig. 299, is really $\frac{AC}{AB} \cdot \frac{r^2}{4AB}$ tan α (cos 2θ − tan α . sin 2θ).

II. (2) E has D's horizontal motion, with an octave of amplitude $\frac{R^2}{4ED}$ which reaches its maximum to the right when D is most up and down, that is at P's dead points.

III (1) A has D's horizontal motion with the addition of an octave, a fraction of E's, or one with an amplitude $\frac{AD}{ED} \cdot \frac{R^2}{4ED}$. This gives to B a vertical octave of amplitude

$$\frac{AD}{ED} \frac{R^2}{4ED} \tan a$$

which reaches its maximum downwards at the dead points.

IV. (2) A has, vertically, a fraction $\frac{AE}{ED}$ of D's whole vertical motion and of course of its octave; that is, the vertical octave of A has an amplitude $\frac{AE}{ED} \cdot \frac{DP}{KP} \frac{R^2}{4L}$ and it is at its maximum downwards when θ is 90. Also A's vertical fundamental motion of amplitude $\frac{AE}{ED} R$ produces a horizontal octave of B, of amplitude $\left(\frac{AE}{ED} R\right)^2 \div 4AB$ and multiplying this by tan a we get a vertical octave in B which reaches its maximum when $\theta = 90°$.

Now an octave which is at its maximum positively when $\theta = 90$ is at its maximum negatively when $\theta = 0$.

Considering the vertical octaves of A and B we see that A has an octave whose amplitude is $\frac{AE}{ED} \frac{DP}{KP} \frac{R^2}{4L}$ and reaches this value negatively when $\theta = 0$.

B has octaves $\frac{AD}{ED} \frac{R^2}{4ED}$ tan a, max when $\theta = 0$.

$\frac{AE^2 \cdot R^2}{4 \cdot ED^2 \cdot AB}$ tan a, negatively max when $\theta = 0$.

Hence C has an octave of amplitude.

$$\frac{AC}{AB}\left(\frac{AD}{ED} \frac{R^2}{4ED} - \frac{AE^2}{4ED^2} \frac{R^2}{AB}\right) \tan a - \frac{CB}{AB} \frac{AE}{ED} \frac{DP}{KP} \frac{R^2}{4L}$$

which reaches this value downwards at the dead points. Therefore, this gear will produce a motion like what is shown in Fig. 296. If the rod working the valve is of length λ and if the half travel of A horizontally is r, there is another octave $\frac{r^2}{4\lambda} \sin (2\theta - 90°)$.

It is evident that this sort of work is more tedious to read than to work out by oneself.

In either the Marshall or Joy gear we have already seen the **effect of curving the slot.**

What is the effect of E moving in an arc instead of a straight line? Evidently E has a vertical octave; A has the fraction $\frac{AD}{ED}$ of this, and C has the fraction $\frac{CB}{AB}\frac{AD}{ED}$ of it. We can make it reach either a + or − maximum at the dead point by having the swinging link which carries it, centred above or below E.

When the point C is not exactly in the straight line connecting A and B or in AB produced we get an effect to which I have not referred, but which it is quite easy to study by skeleton drawing and the method of Art. 316.

325. Octaves in Link Motions. Probably tens of thousands of skeleton drawings have been made showing the motion of a valve worked from linkages, but we have had no systematic study of valve motions leading to easy rules. I venture to think that my method of studying the *octave* will yield good results. Unfortunately I have never yet taken up the subject thoroughly; every session when I have been on the point of obtaining simple generalisations from my students' work, other matters have claimed my attention. What I shall give here is useful, but only in the way of suggestion.

My method is this: first, study the motion to find the fundamental S. H. motion as in Arts. 306–8. Now make a skeleton drawing, tabulate the displacements for twenty-four equidistant positions of the crank and find the octave as in Art. 316. Alter the motion and see what its effect is upon the octave, and compare the result with the considerations of Art. 316. It would not, indeed, add greatly to the work to find in each case the terms in θ, 2θ, and 3θ.

It is true that a person expert in dealing with trigonometrical expressions might be able to obtain the terms by making judicious approximations; unfortunately the very qualities that go with expertness in mathematics are usually those that prevent a man's being able to judge as to what terms he may, or may not, reject during the working out of a practical problem. I venture to offer the following as a suggestive method of dealing with links.

326. Gooch Link Motion.—*Open Eccentric Rods.*—Assume that the link CC^1, Fig. 308, is straight and that its middle point F or G has a horizontal motion in OO^1, AA^1 is the symmetrical position of the link; AB, A^1B^1 are in the lines joining A and A^1 with the two eccentric centres, when symmetrical each making the angle β with the line of centres OO. Let CFO^1 be ψ.

Find y or PQ the horizontal displacement of a block which keeps at the

distance $GQ=a$ from OO^1. Let the eccentricity of each eccentric be r and length of link $AA^1=CC^1=2\lambda$.

Approximation (1). Assume that if the displacements AC and A^1C^1 are projected on NM and N^1M^1 we get $AB=x$ and $A^1B^1=x^1$, which are the simple

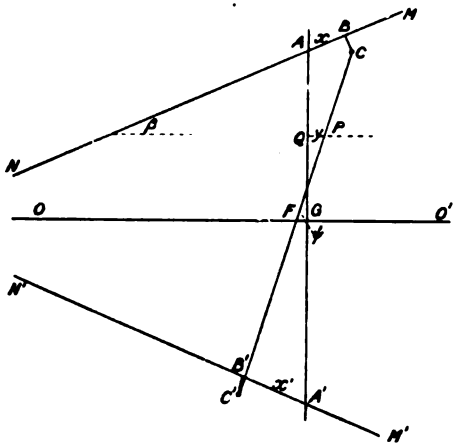

FIG. 308.

harmonic displacements which would occur along these lines, the eccentric rods being assumed to be infinitely long. In fact, if a is the advance of either eccentric and θ is the angle which the main crank makes with its dead point position remote from the link in the direction of motion of the hands of a watch, and neglecting the octaves which are very small

$$x=r\{\sin(a+\beta+\theta)-\sin(a+\beta)\}$$

$$x^1=r\{\sin(a+\beta)-\sin(a+\beta-\theta)\}$$

Notice that x^1 is to the left and x to the right.

By projecting horizontally and vertically,[1] or by simple geometry, making CC^1 the hypotheneuse of a right angled triangle with horizontal and vertical sides, joining F with the right angle and projecting the horizontal base upon N^1M^1; or in other ways; it is easy to show that

$$\cos\psi=\frac{x+x^1}{2\lambda\cos\beta},\quad FG=\frac{\lambda\{\cos(\psi-\beta)-\sin\beta\}-x}{\cos\beta}$$

so that $y=a\cot\psi-FG$.

[1] By projection we get

$$\lambda\sin\psi=\lambda+x\sin\beta-CB\cos\beta$$
$$\lambda\cos\psi=FG+x\cos\beta+CB\sin\beta$$
$$\lambda\sin\psi=\lambda-x\sin\beta+C^1B^1\cos\beta$$
$$\lambda\cos\psi=-FG+x^1\cos\beta+C^1B^1\sin\beta$$

Eliminate CB and C^1B^1

$$\lambda\cos(\psi-\beta)=\lambda\sin\beta+FG\cos\beta+x$$
$$\lambda\cos(\psi+\beta)=-\lambda\sin\beta-FG\cos\beta+x^1$$

$$2\lambda\cos\psi\cos\beta=x+x^1$$

Approximation (2). Let $\cot\psi = \dfrac{\cos\psi}{\sin\psi} = \dfrac{\cos\psi}{\sqrt{1-\cos^2\psi}} = \cos\psi(1+\frac{1}{2}\cos^2\psi)$

because $\cos\psi$ is a small quantity; then if we let

$$\frac{x}{\cos\beta} \text{ and } \frac{x^1}{\cos\beta} \text{ be called } X \text{ and } X^1$$

$$\cos\psi = \frac{1}{2\lambda}(X+X^1)(1+\tfrac{1}{2}\cos^2\psi)$$

$$FG = -X + \tfrac{1}{2}(X+X^1) + \lambda\,\frac{\sin\psi\sin\beta - \sin\beta}{\cos\beta}$$

Approximation (3), $-\dfrac{\lambda}{\cos\beta}\sin\beta(\sin\psi - 1) = \frac{1}{2}\lambda\tan\beta\cos^2\psi$

and hence

$$y = \frac{a}{2\lambda}(X+X^1)(1+\tfrac{1}{2}\cos^2\psi) + X - \tfrac{1}{2}(X+X^1) + \tfrac{1}{2}\lambda\tan\beta\cos^2\psi$$

Now on the ordinary rough theory of Art. 306 the value of y is

$$\frac{\lambda+a}{2\lambda}X - \frac{\lambda-a}{2\lambda}$$

Hence if I use y^1 to mean our new y – old roughly approximate y;

$$y^1 = \left\{\frac{a}{4\lambda}(X+X^1) + \tfrac{1}{2}\lambda\tan\beta\right\}\left(\frac{X+X^1}{2\lambda}\right)^2$$

It is to be noted that $\alpha+\beta$ is what may be called the *true* advance of the ends of the link. If we let $X+X^1$, which is $2r\sin\theta\,\dfrac{\cos(\alpha+\beta)}{\cos\beta}$ be called $\mu\sin\theta$, we have

$$y^1 = \frac{a\mu^3}{16\lambda^3}\sin^3\theta + \frac{1}{8}\frac{\mu^2}{\lambda}\tan\beta\,.\sin^2\theta$$

Now $\sin^2\theta$ is $\frac{1}{2} - \frac{1}{2}\cos 2\theta$, and $\sin^3\theta$ is $\frac{3}{4}\sin\theta - \frac{1}{4}\sin 3\theta$

Hence neglecting the constant term $+\dfrac{1}{16}\dfrac{\mu^2}{\lambda}\tan\beta$

$$y^1 = \frac{3}{64}\frac{a\mu^3}{\lambda^3}\sin\theta - \frac{a\mu^3}{64\lambda^3}\sin 3\theta - \frac{1}{16}\frac{\mu^2}{\lambda}\tan\beta\,.\cos 2\theta$$

$$\text{or } y^1 = \frac{3}{64}\frac{a\mu^3}{\lambda^3}\sin\theta - \frac{1}{16}\frac{\mu^2}{\lambda}\tan\beta\cos 2\theta - \frac{a\mu^3}{64\lambda^3}\sin 3\theta$$

Taking some usual numbers

$r = 3$ inches, $\alpha = 30°$, $2\lambda = 15$ inches, ecc. rods 24 inches.

$$\text{Sin}\,\beta = \frac{7{\cdot}5}{3+24} = {\cdot}278 \text{ nearly so that } \beta = 16°{\cdot}12,\ \tan\beta = {\cdot}2890$$

$$\mu = 2r\,\frac{\cos(\alpha+\beta)}{\cos\beta} = 6\,\frac{\cos 46°{\cdot}12}{\cos 16{\cdot}12} = 4{\cdot}33,\ \mu^2 = 18{\cdot}75,\ \mu^3 = 80{\cdot}14$$

$$y^1 = {\cdot}009a\sin\theta - 0{\cdot}0450\cos 2\theta - {\cdot}003a\sin 3\theta.$$

The terms in θ and 3θ are really of no importance; they are symmetrical and produce the same effects for the two ends of the cylinder; they are small. The term in 2θ is also small. What there is of it is just the reverse of what is shown in Fig. 296. But the longer admission on one side of the cylinder than the other is so little marked that we may almost take this gear to be completely represented by the rough theory of Art. 306. Notice that the octave $·045\cos 2\theta$ is of the same amount for all grades of expansion, and is therefore most important where the fundamental motion is small, that is, at the high grades of expansion.

When the octave is so small as this, it is comparable with the small octaves in x and x^1 which we neglected, and whose amounts are known to us from Art. 304, or from the considerations of Art. 320. It is quite easy to calculate the addition, but I prefer to neglect it, and indeed, the whole octave is negligable, as we must not attempt too much accuracy when the quantities are so small. The constant term in each case is very nearly the same, and if this were a real valve gear I should calculate from y^1 the limits of motion of the valve.

327. Slipping of Block. In any link motion it will be noticed that suspension by a reversing link means, that whatever slipping occurs has a frequency twice as great as the fundamental motion. If the amplitude of the slip is s it evidently means that there is a part of the motion which is nearly

$$\frac{rs}{\lambda \cos \beta} \sin (2\theta + \gamma) \cos (\alpha + \beta) \sin \theta,$$

where $\alpha + \beta$ is the real angle of advance in full gear, and λ is the half length of the link. This is because the effect is to be continually altering slightly the respective fractions of the end motions which any intermediate point possesses.

This is a small term which may be written as

$$\frac{rs}{2\lambda \cos \beta} \cos (\alpha + \beta) \{\cos (\theta + \gamma) - \cos (3\theta + \gamma)\}.$$

As it involves θ and 3θ and not 2θ or 4θ, it is a symmetrical term which has no practical effect on the valve motion, slipping is only objectionable on account of the wear and tear that it produces. We see that it must greatly simplify our study of link motions if we can leave out of account all effects due to slipping of the block; specifying the motion of the valve as being practically the same as the horizontal motion of a point in the link, which is the *average* position of the block.

328. From considerations of the above kind it is easy to show that the octave is of no practical importance in any of the six kinds of link motion, if the middle of the link has truly a horizontal motion, and if the proportions are what they usually are in locomotives. It is only when the eccentrics have as great throws and lengths of link and short rods as I have only seldom seen them even in marine engines, that the octave is of practical importance if the middle of the link is guided to move nearly in a straight line. When indeed the paths of the points approach some of the shapes shown in Fig. 287, we always have important octaves. I should say, however, that the best way of obtaining an octave sufficiently large to be really useful would be to have short eccentric rods with large throws and a long link. It seems also that the construction for finding the octave for any position of the gear in any link motion is almost exactly the

same as that used in finding the fundamental (Art. 307, and I give such a graphical rule in the note)[1] if it were not for the considerations of Art. 305, which show that the method of suspension destroys the usefulness of any such rule.

329. The following results obtained by my students will show how important the usually neglected terms become when eccentric rods are short. In every case the forward and back eccentrics have throws of 3 inches, 30° advance, lengths of rods 12 inches, slot 10 inches long, radius of slot 12 inches.

The horizontal displacement y of the block is measured from an arbitrary zero.

$$y = A + a \sin(\theta + \alpha) + b \sin(2\theta + \beta) + c \sin(3\theta + \gamma) + d \sin(4\theta + \delta).$$

The values of the constants are not given in the following table, when they are very small. The angles α, β, γ, δ are given in degrees.

			A	a	α	b	β	c	γ	d	δ
Gooch link Open rods	Centre moving horizontally	¾ full gear	—	3·22	57	·5	114				
		Half ,,	—	2·93	66	·4	108				
		Mid ,,	—	2·73	90	·3	90				
	Centre suspended from link 6¾ in. long	¾ full gear	—	3·09	57	·685	104				
		Half ,,	—	2·86	66	·525	120				
		Mid ,,	—	2·725	90	·325	90				
	Graphical rule, Art.	¾ full gear	—	3·09	63						
		Half ,,	—	2·90	72						
		Mid ,,	—	2·74	90						
Stephenson link Open rods	In every position of the gear the centre has a horizontal motion	Full gear	·065	3·09	26	·13	306	·025	90	·025	60
		Half ,,	−·09	2·83	58	·13	276	·025	90	·0175	104
		Mid ,,	−·14	2·72	90	·13	270	·015	90	·0075	92
	Centre of link hung from a reversing link 11″ long, itself supported from an 8″ arm	Full forward	·125	3·175	21	·0765	316	·0955	78	·027	84
		Half ,,	−·085	2·86	54	·136	278	·071	116	·01	112
		Mid gear	−·148	2·716	88	·1335	275	·0535	164	·0075	60
		Half backward	−·095	2·781	60	·125	282	·041	324	·0195	96
		Full ,,	·029	3·003	29	·1685	306	·04	246	·0315	36
	Bottom of link hung from a reversing link 15″ long, itself suspended from an arm 8″ long	Full forward	−·0675	3·03	30	·202	−27	·044	186		
		Half ,,	−·1005	2·82	56	·0535	−106	·067	−99		
		Mid gear	−·061	2·805	91	·255	−58	·105	−141		
		Half backward	−·0775	2·95	55	·385	−91	·0155	150		
		Full ,,	·436	3·39	17	·425	−146	·0155	75		
	Graphical rule, Art.	Full gear	—	3·00	30						
		Half ,,	—	2·43	54½						
		Mid ,,	—	2·225	90						

[1] Graphical rule for the octave, assuming that A and B move in paths parallel to $E\,O\,F$, the line of centres of an engine. When the crank is at dead point $O\,D$, Fig. 308A, let the eccentrics be at $o\,a$ and $o\,b$ working the link $A\,B$. $G\,o\,a = \alpha = H\,o\,b$ the angles of advance. We have seen how to find the fundamental S.H.M. of C. Now to find its octave. Draw $G\,O\,H$ perpendicular to $D\,O\,E$.

As in Art. 303, make $O\,A' = C\,B'$ = length of eccentric rod. Let $A'O\,E$ be called

I must confess that what I have put before students on this subject is not its complete study, but only suggestive of how it may be studied. Mr. Harrison has now arranged for me a large model which may quickly become either a Stephenson, Gooch, or Allan link motion, which automatically draws either its own oval diagram,

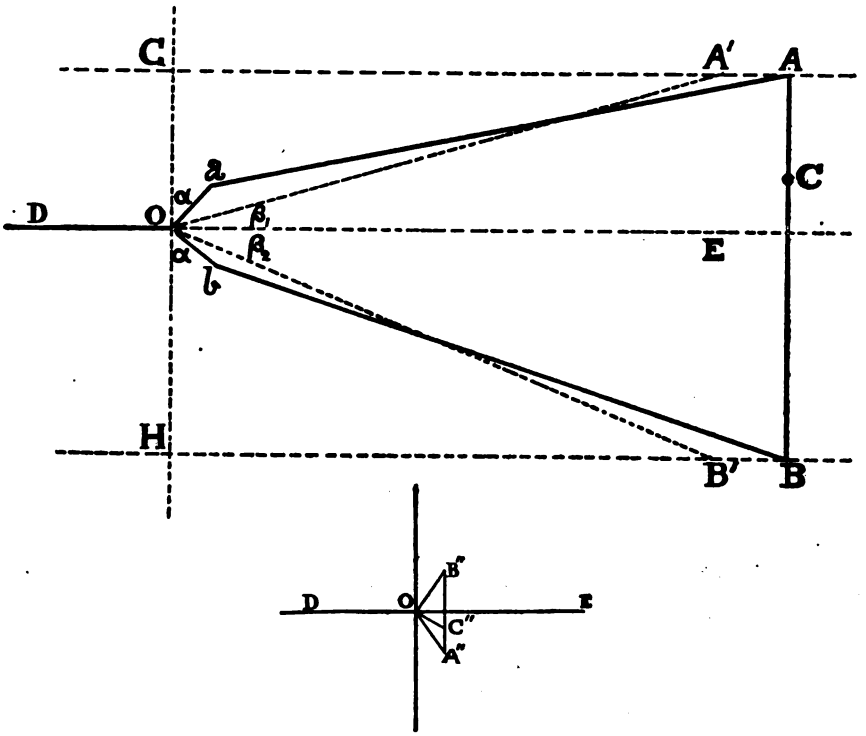

FIG. 300A.

or a curve showing y and θ. In a short time we hope to be in a position to say with certainty exactly how the octave enters into the valve motion with each of these gears with any method of suspension of the link, but I am not sure that skeleton drawing may not be better, and I have shown how easy it is to get results by means of it.

ϕ_1, and let $B'O\,E$ be called ϕ_2. Make $A''O\,E = 2\,(\alpha + \phi_1)$, $B''O\,E = 2\,(\alpha + \phi_2)$. Let $Oa = Ob = r$.

Make $OA'' = r^2/4A'G$, $OB'' = r^2/4B'H$.

Join $A''B''$ and divide in C' in the proportion in which C divides the link. Then the displacement of C from such a line as $G\,O\,H$ is a very nearly constant term, plus the fundamental S.H. displacement found in Art. 303, together with

$$OC' \cos 2\,(\theta + EOC'').$$

CHAPTER XXIX.

INERTIA OF MOVING PARTS.

330. THERE are two kinds of problem worked by students.

1st. To find the forces acting at the cross head and crank pin in every position of the engine.

2nd. To find the forces acting between the earth and the frame of the engine, and to diminish them by balancing.

The first of these is very important if we consider the wear and tear of the engine. The changes in turning moment on the crank shaft are quite unimportant. The second has become very important, **because of the vibrations** set up in the ground or in a ship. In slow speed engines neither of them is of much importance.

The general principle of balancing may be put in this way. Only for varying pressures in steam pipes, a very small matter, the resultant force in any direction on the frame work of the engine due to steam pressures is zero. There is a moment acting, the nearly constant moment with which the machinery driven by the crank shaft resists motion, and this is balanced by a moment from the ground upon the frame. We need not now consider steady forces like this; we are concerned with forces due to relative motions of parts of the engine.

Now consider—if we had no friction, and no force of steam, and no external force—the engine revolving. Suppose its weight were exactly balanced; that it was free to move in any direction whatsoever. Then the frame will move in such a way that "the centre of gravity of the whole engine may not have any motion." This gives us one of the best points of view. For you will notice that in an actual engine we do not give to the frame the above freedom, and so we prevent its centre of gravity from keeping fixed. If we know the motion of the centre of gravity, we know from the simple law of motion what forces must be exerted on the frame by the

earth. Now what we aim at in balancing is this, that as an engine moves, its centre of gravity shall remain in the same point relatively to the frame of the engine. There is another condition also to be fulfilled—the moment of momentum of the engine about any axis must remain constant.

Another way of putting it is this:—

If any portion of mass m has acclerations $\ddot{x}$, $\ddot{y}$, $\ddot{z}$ in three directions, regard $m\ddot{x}$, $m\ddot{y}$, $m\ddot{z}$ as forces in the three directions, the resultant of all such forces is the force exerted on the whole engine by outside bodies; or as the frame of the engine is itself fixed, it is the force with which the frame acts on the moving part. Or if we find the resultant for any part or parts of the engine this is the force with which outside things act on this part or parts.

For every moving part we have forces. A piston, piston rod, and cross head move together and may be considered together as giving rise to or requiring forces in one direction, and every sliding piece has to be considered in the same way. Rotating pieces are easily balanced by each other or with the help of pieces put on for balancing purposes. Pieces like connecting rods give most trouble, because of their curious angular motions.

331. Balancing Rotating Parts. Any portion of stuff of mass m, whose centre of gravity revolves at v feet per second in a circle of radius r feet, exerts a centrifugal force mv^2/r pounds radially; and we know that an equal and opposite centripetal force of this amount must be acting upon the body. If the body has an angular velocity of a radians per second, the force is ma^2r. If we apply this rule to every small portion of a rotating body, so as to get the loads due to centrifugal force, we can afterwards calculate the stresses produced. In this way we find the strengths of rotating objects such as fly wheels and coupling rods. Also we find the forces which must be exerted at the bearings to balance the centrifugal forces; we have easy problems in statics which may be worked graphically or arithmetically. If the axis of rotation passes through the centre of gravity of the whole of a body attached to a shaft with two bearings, the pressure on one bearing (due to centrifugal force) is at every instant equal and opposite to the pressure on the other, and by placing masses in proper positions the pressures on both bearings may be reduced to nothing. Thus, for example, if the centres of gravity of two masses are directly opposite to one another on a shaft, they may be made to balance When not opposite they do not balance, but two masses may balance one, which is directly opposed to the resultant force of the two.

EXERCISE. Show that if there are masses A and B, whose centres of gravity are at distances OA and OB from the axis O in a plane at right angles to the axis, they produce the same effect as a mass 1 at OC', if OC' is the diagonal of the parallelogram of which OAA^1 and OBB^1 are the sides, where $OA^1 = A \cdot OA$, $OB^1 = B \cdot OB$, and that we may use a mass C at C in the line OCC^1 if $C \cdot OC = OC^1$.

EXERCISE. Show that a mass $A + B$, in the position of the centre of gravity of $A + B$ will produce the same effect.

EXERCISE. Show that if there are masses A, B, C, D, &c., on a wheel, then a mass $A + B + C + D +$, &c., in the position of the centre of gravity of A, B, C, D, &c., will produce the same centrifugal force.

It is interesting to mount an axle to which a wheel is keyed, upon a not very rigid frame; fix a small mass on the wheel anywhere, and rotate rapidly. Even with small weights the effects of want of balance are very evident, and it is very easy by attaching other weights to the same wheel to show the principles of balancing, It does not at first come home to a student that the effect of centrifugal force in a badly balanced machine may be very great, and so he ought to work a few exercises like the following.

EXERCISE. What is the centrifugal force due to a body of 20 lbs. at 3 feet from an axis, revolving at 500 revolutions per minute?

Answer. ma^2r becomes $wrn^2 \div 2{,}937$ if w is weight in pounds and n revolutions per minute. Hence we have a force of $20 \times 3 \times 25 \times 10^4 \div 2{,}937$ or 5,122 lbs. acting in every direction as the mass whirls round.

EXERCISE. A connecting rod 5 feet long, crank 1 foot. The connecting rod weighs 400 lbs., and its centre of gravity is $2\frac{1}{4}$ feet from the crank pin; we take it that in many inertia effects, it may be regarded as consisting of $\frac{2\frac{1}{4} \times 400}{5}$ or 220 lbs. situated at the crank pin, and $\frac{2\frac{1}{4} \times 400}{5}$ or 180 lbs. situated at the cross head. The crank (including the non-symmetrical part of the shaft near the crank) weighs 150 lbs., and its centre of gravity is 4 inches from the axis; this is equivalent in its centrifugal force to $150 \times \frac{4}{12}$ or 50 lbs. existing on the crank pin. Altogether, then, we have 220 + 50 or 270 lbs. on the crank pin. What is the centrifugal force due to this when the speed is 250 revolutions per minute?

Answer. $270 \times 1 \times 250^2 \div 2{,}937 = 5{,}745$ lbs.

332. When a crank goes round uniformly, if the connecting rod

were infinitely long, **the motion of the sliding mass** would be simple harmonic. In this case the acceleration of the mass is always directed towards the middle of its path; it is proportional to distance from the middle, being greatest at the ends, and at the ends it is equal to the centripetal acceleration of the crank pin.

EXERCISE. If the piston and cross head weigh 460 lbs., and we include the above 180 lbs.; if the connecting rod were infinitely long; what are the forces due to the reciprocating motion at the end of the stroke?

Answer. Exactly equal to the centrifugal force of the same mass at a radius equal to that of the crank pin; or 13,620 lbs.

If we speak of the line of action of the engine as horizontal, note that the reciprocating forces are horizontal, and cannot be exactly balanced except by other reciprocating forces.

A mass M, with simple harmonic motion of amplitude r, may be exactly balanced just at the ends of the stroke. To do this we regard it as a mass M on a crank pin r. But we have merely converted a horizontal action into an equal vertical action; all horizontal forces are balanced, but the vertical forces due to the balance weight are unbalanced. As the cross head of an engine has not a simple harmonic motion, we cannot balance even in this way all the horizontal forces. In a locomotive it is thought well to balance all the horizontal forces [a common English rule is to balance only two-thirds of the reciprocating forces in this way], and as this can be done approximately by rotating pieces, which, however, introduce vertical forces of their own, we put up with these as being less pernicious than horizontal forces. There can be no doubt that when this is done so that the horizontal forces alone are balanced, there is less of a tugging action, and consequently the coal bill is considerably diminished. One great objection to the method is that the pressure of the wheel on the rail varies greatly. For example, the highest speed of an English locomotive was attained in 1885; it was 85 miles per hour [same highest in America; greatest average speeds for over 500 miles were—English, 64·1; American, 64·9]. The driving wheel was 85 inches in diameter. EXERCISE: Show that, disregarding slip, the highest speed was 340 revolutions per minute; also, taking the above balance weight, the lifting force on each wheel was 10,630 lbs., or nearly 5 tons every revolution. Now this in itself would greatly produce slipping and make it exasperatingly difficult for a driver to get a greater speed, but the effect may be enormously magnified as the forced vibrations get to be more in time with the natural vibrations of the engine. The highest speeds can really only

be reached with perfectly balanced engines, and by Art. 348 we see that there must be at least three cylinders driving the same crank shaft for even a fairly good balance to be obtained.

333. The rules for the **balancing of locomotives** are perfectly simple. We imagine all the moving mass, piston, piston-rod, cross-head, and the whole of the connecting rod as existing at the crank pin. We add to this a mass which, existing on the crank pin, would be equivalent in its centrifugal force to that of the crank. In the same way, we imagine the valve and all that moves with it, the whole of the eccentric and half the link, &c., as existing at the eccentric disc centre. Thus all the moving masses are represented by rotating masses on the crank shaft. Again, the masses of all coupling rods are imagined to exist on their pin which rotates with the crank shaft, and as we can usually change the angular position of this, the coupling rods may be made to exercise a great balancing action. In inside cylinder engines we let the coupling rods balance all the other parts. If, instead of considering only horizontal forces, we considered vertical forces, it would be necessary to think of the actual positions of the centres of gravity of these coupling rods; neglecting this, means the neglect of a surging couple due to the vertical forces.

EXERCISE. A mass m whose centre of gravity is at the distance r from the axis; it is between two wheels at the lateral distances l_1 and l_2, what masses on these wheels will balance it?

Answer. Imagine the balancing masses to have their centres of gravity at the same distances r from the axis. Their amounts are $\frac{l_1}{l_1 + l_2} m$ and $\frac{l_2}{l_1 + l_2} m$; the greater being on the nearer wheel. Their centres are at 180° from, and are in the same plane with that of the mass to be balanced and the axis.

EXERCISE. In the above case let the mass be outside the space between the wheels. The two masses are now $\frac{l_1}{l_1 - l_2} m$ and $\frac{l_2}{l_1 - l_2} m$. The mass on the nearer wheel is therefore larger than the mass to be balanced and is at 180° from it. The mass on the farther wheel is 0° from the mass to be balanced. The rules adopted then are evidently the elementary rules for finding the equilibrant or resultant of parallel forces. When we have found the balancing masses on a pair of wheels for all the rotating parts, we can now replace a number of masses on a wheel by means of a single mass; we can also have it near to or far from the centre. When it is large, it is usually distributed over two or three spaces between the wheel spokes, that

the tire may not be unduly strained. In wheels of cast steel (Fig. 61) it is part of the wheel.

334. In the following exercises neglect the valve motion; the cranks are at right angles. R is the length of the crank; r the distance of centre of gravity of any balance weight from the centre of its wheel; c the distance apart of the centre lines of the cylinders; d the distance apart of the wheels, or rather of the centres of gravity of the balance weights placed on the wheels; w the total weight (referred to the crank pin) of each crank itself plus the piston, piston-rod, cross head, slide, and connecting rod; A the angle which the position of the centre of gravity of a balance weight makes with the near crank, W the balance weight on one wheel.

EXERCISE 1. **Inside cylinders**, uncoupled wheels. *Answers.*

$$W = \frac{wR}{1{\cdot}41rd}\sqrt{d^2 + c^2}, \tan A = \frac{d - c}{d + c}.$$

EXERCISE 2. **Outside cylinder** engine, uncoupled wheels. *Answers.*

$$W = \frac{wR}{r}, A = 180°.$$

335. The rules for the balancing of rotating parts are very easily illustrated by a piece of **laboratory apparatus.** A frame is supported by three long spiral springs so as to be very easily moved in any direction. On it there is a spindle which may be driven at any speed by a little electromotor which is also on the frame. A number of brass discs on the spindle allow of weights being fastened to them in all sorts of positions.

It is my intention to complete this apparatus by letting a spindle drive one or more sliders by means of cranks and connecting rods, but I do not yet know to what extent it will prove valuable in teaching. It ought to prove of much greater value than the other, because the balancing of the forces due to sliding pieces is not nearly so simple as a matter of calculation.

336. Motion of Cross Head—General Propositions.

1. If a crank R represented by OB, Fig. 309, working a slider with an infinitely long connecting rod, makes an angle θ with its dead point position OA_1 and goes round uniformly at q radians per second, or n revolutions per minute, or if the pin B is travelling at v feet per second; BG^1 or AO is the displacement of the slider from the mid position;

BA represents its velocity to such a scale that GO represents v or qR or $\frac{2\pi n}{60} R$ feet per second; BG^1 represents the acceleration to

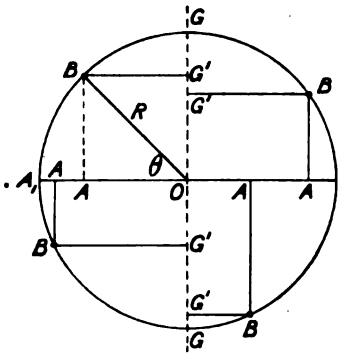

FIG. 309.

such a scale that A_1O represents v^2/R or q^2R or $\frac{4\pi^2n^2}{3,600} R$ feet per second per second.

2. If the connecting rod is of length l. Let the slider be to the left hand of A_1. Draw an arc HOH, Fig. 309A, with a radius equal to

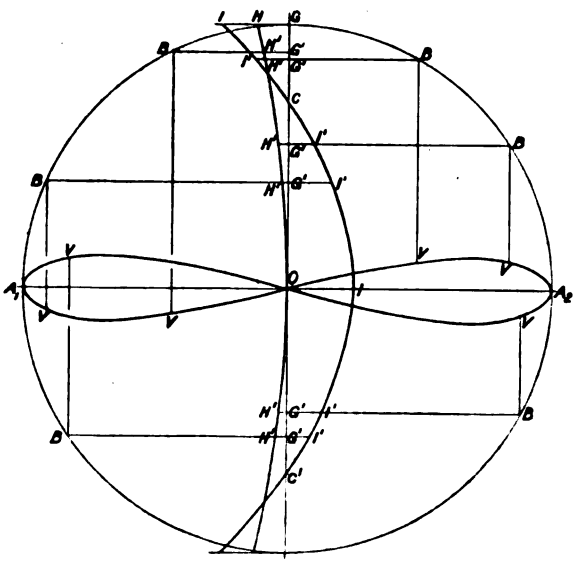

FIG. 309A.

the length of the connecting rod, its centre in OA_1 produced. Make $GI = OI = GI = 2GH$; also take it that there is no correction

needed when the crank is at 45° from its dead point. That is, find the points C and C^1 such that OC or $OC^1 = \cdot 707\, OG$. Now draw a curve $ICIC'I$. If the connecting rod is five or more times the crank, an arc of a circle through III will do very well. But, if the rod is of less length, the curve $ICIC^1I$ is not an arc of a circle, it is more nearly that of a parabola. Anyhow, it is easy to draw, since we have five points in it and know its symmetrical shape.

We may take it that for any position B of the crank pin; x the displacement of the slider from its mid position is not represented by BG^1, but by BH^1; and if the rod is not less than three and a half times the crank, or even if it is a little less, the acceleration is not represented by BG^1 but by BI^1. The construction for the velocity is not so simple. An approximate rule like this is only of importance during the study of this subject, as a useful way of putting one's ideas. It is hardly needed for practical purposes. The rule for the

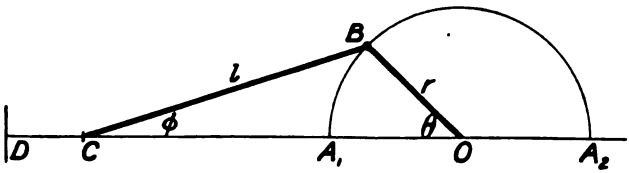

Fig. 310.

displacement is of course correct, and is well known. I have used a loop curve which takes the place of the line A_1OA_2 for velocity measurements, but these are not nearly so often required as the other two; besides, it is not so easily remembered. The distance BV represents the velocity.

337. The following algebraic work will enable a student to look at the matter from another point of view, and ought to be used to test the above rule.

Let $DC = s$ (Fig. 310).

Projecting on the line of centres and at right angles to this we get

$$\left.\begin{aligned} s + l\cos\phi + r\cos\theta &= l + r \\ l\sin\phi &= r\sin\theta \end{aligned}\right\} \quad . \quad . \quad . \quad . \quad (1)$$

As from the second of these

$$\sin\phi = \frac{r}{l}\sin\theta, \cos\phi = \sqrt{1 - \frac{r^2}{l^2}\sin^2\theta}$$

substituting in the first we eliminate ϕ and get

$$s = r(1 - \cos\theta) + l\left\{1 - \sqrt{1 - \frac{r^2}{l^2}\sin^2\theta}\right\} \quad . \quad . \quad (2)$$

Or if x is the distance to the left of the middle of the stroke, so that $r - s = x$, and if $\theta = qt$ where q is the angular velocity in radians per second.

$$x = r \cos qt - l \left\{ 1 - \sqrt{1 - \frac{r^2}{l^2} \sin^2 qt} \right\} . \quad . \quad . \quad (3)$$

If l is not less than 5 times r we may treat $\frac{r^2}{l^2} \sin^2 qt$ as so small a quantity that $\sqrt{1 - a} = 1 - \frac{1}{2} a$. and

$$x = r \cos qt - \frac{r^2}{2l} \sin^2 qt \quad . \quad . \quad . \quad . \quad . \quad . \quad (4)$$

But $2 \sin^2 qt = 1 - \cos 2qt$, and hence

$$x = r \cos qt - \frac{r^2}{4l} (1 - \cos 2qt) \quad . \quad . \quad . \quad . \quad (5)$$

To the student of periodic motions in general, this form is very satisfactory. He sees that the motion of a slider worked from a uniformly rotating crank by a connecting rod is a simple harmonic motion of frequency $f = \frac{q}{2\pi}$ or of periodic time $\tau = \frac{2\pi}{q}$, together with an octave, as a musician might call it, a harmonic of twice the frequency and of smaller amplitude. The velocity v and acceleration a are then

$$v = \frac{dx}{dt} = - qr \left\{ \sin qt + \frac{r}{2l} \sin 2qt \right\} . \quad . \quad . \quad (6)$$

$$a = \frac{dv}{dt} = \frac{d^2x}{dt^2} = - q^2 r \left\{ \cos qt + \frac{r}{l} \cos 2qt \right\} . \quad . \quad (7)$$

Thus if $l = 5r$, we see that in the displacement x, the octave has an amplitude only one-twentieth of the fundamental; in the velocity the octave term is one-tenth of the fundamental. Whereas in the acceleration the octave term is as much as one-fifth of the fundamental. In fact, **any departure from simple harmonic motion** is very greatly accentuated in the acceleration; a matter of some importance to us in these days of high speeds of reciprocating machinery.

338. Exercise for a Class *of Students.*

Draw Fig. 309. When the main crank makes the angle θ with its dead point

$$x = r \left\{ \cos \theta - \frac{r}{4l} (1 - \cos 2\theta) \right\} = B\,H, \text{ Fig. 311.}$$

$$\frac{dx}{dt} = v = - rq (\sin \theta + \frac{r}{2l} \sin 2\theta) = - B\,V$$

$$\frac{d^2x}{dt^2} = a = - rq^2 (\cos \theta + \frac{r}{l} \cos 2\theta) = - B\,I.$$

Let $r = 1$, $q = 1$.

I. Let $l=5r$. Let a student calculate for various values of θ, BH, BI, and BV, or rather let him plot the distances HG^1, IG^1, and BV. Take $\theta=0$, 10°, 20°, &c., right round to 360.

II. Let $l=4r$ and repeat.

III. Let $l=3r$ and repeat.

IV. Let $l=6r$ and repeat.

V. Let $l=10r$ and repeat.

In each case let him test with what accuracy the curve of Art. 336 represents his results, and to what extent he may depend upon correctness when an arc of a circle is used. Fig. 309A shows the result obtained by one of my students when $l/r=4$.

It is an excellent exercise for students to make a diagram, Fig. 312, in which the distances BH^1 are abscissæ and the distances BI^1 are ordinates, taking them from such a diagram as Fig. 309A. Or they may proceed as follows:—

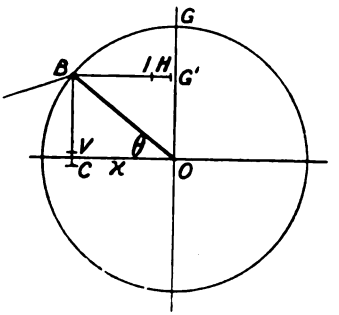

FIG. 311.

339. *Accurate* **Practical Rule.** —It will be found by the formula of Article 340 that the accelerations at the two ends of the stroke are, accurately,

$$\frac{v^2}{r}\left(1 \pm \frac{r}{l}\right)$$

being greater at the end remote from the crank; v is the velocity of the crank pin; r the length of the crank and l the length of the connecting rod. Also, when θ is 90° (Fig. 310) the piston is the distance $l - \sqrt{l^2 - r^2}$ to the right of its mid-stroke, and its acceleration is then

$$v^2 \div \sqrt{l^2 - r^2}.$$

Thus in the case of Art. 58, if x is distance to the *left* of the mid-stroke; if $r = 1{\cdot}25$ feet, $l = 6{\cdot}25$ feet, and the crank makes 120 revolutions per minute, we find

θ	x	accel. in feet per second per second.
0	1·25	-237
90	-0·125	39·5
180	-1·25	158

Many people merely recollect the accelerations at the ends, and assume that the acceleration is 0 when the crank and connecting rod

are at right angles. This rule is easy to remember, easy to apply, and is wonderfully true except for very short connecting rods.

Sometimes the following exact rule is employed to get the intermediate point of no acceleration, but I am afraid that I am making too much of the matter, for in using these results I shall neglect friction and other things of much more importance than small errors here. x is distance of piston to the left of mid-stroke when there is no acceleration, the crank being r feet long; l is the length of the connecting rod in feet.

l/r	2	3	4	5	6	8	10
x/r	·380	·289	·230	·189	·160	·122	·100

To find these numbers from the formula of Art. 340 is an easy mathematical exercise.

If the connecting rod were infinitely long the acceleration in any position would be exactly proportional to distance from the

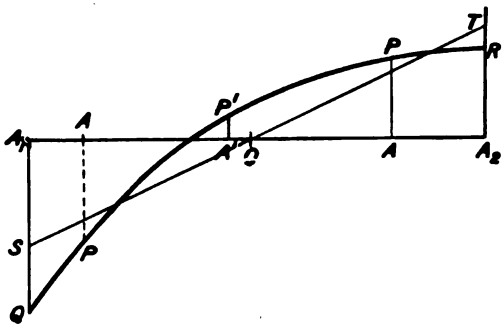

FIG. 312.

middle of the path, and would always be towards the middle; and the diagram of accelerations would be the straight line ST (Fig. 312), $A_1S = A_2T$ representing 197·5 feet per second per second. If we take the case when $\frac{l}{r} = 5$ tabulated above, and $r = 1{\cdot}25$ feet, the diagram of accelerations is the curve $QP'R$.

A_1A_2 represents the length of the piston stroke, A_2 being nearer the crank. I have made A_1Q represent -237, A_2R represents $+158$, and where OA^1 is 0·125 feet I have let A^1P^1 represent 39·5 and drawn by hand the curve QP^1R.

340. After equation (3) of Art. 337, we adopted an approximation

of great interest to students of periodic motions and mechanisms in general. But in the study of a particular mechanism, like the crank and connecting rod, it is sometimes thought well to do more than take a first approximation. For myself, I do not think it necessary to discuss small errors in this, regarding the many other things that we neglect, but for the sake of the weaker brethren I give the following construction :—

Starting with either (2) or (3), and differentiating twice and remembering as before that $\theta = qt$, we find the acceleration

$$a \text{ or } \frac{d^2x}{dt^2}\left(\text{ or } -\frac{d^2s}{dt^2} \text{ as } x = r - s.\right)$$

$$\text{to be } -\frac{4\pi^2n^2r}{3600}\left\{\cos\theta + \frac{m\cos 2\theta + m^3\sin^4\theta}{(1-m^2\sin^2\theta)^{3/2}}\right\} \quad . \quad . \quad . \quad . \quad (3),$$

when m stands for r/l.

The student had better work out also

$$\frac{d^2\phi}{dt^2} = -\frac{4\pi^2n^2}{3600}\frac{m(1-m^2)\sin\theta}{(1-m^2\sin^2\theta)^{3/2}}$$

The value of $\frac{d^2x}{dt^2}$ ought to be worked out for the following values of θ. It is evidently the same for two values of θ equally distant from 0° or 180°. So that if we know it for $\theta = 40°$, it is the same for $\theta = -40$; if we know it for $\theta = 160°$, it is the same for $\theta = 200°$.

$$\theta = 0°, \text{ acceleration} = -\frac{4\pi^2n^2r}{3600}\left(1 + \frac{r}{l}\right)$$

$$\theta = 180°, \text{acceleration} = \frac{4\pi^2n^2r}{3600}\left(1 - \frac{r}{l}\right)$$

$$\theta = 45°, \text{acceleration} = -\frac{4\pi^2n^2r}{3600}\left\{1 + \left(\frac{2l^2}{r^2} - 1\right)^{-3/2}\right\}\frac{1}{\sqrt{2}}$$

$$\theta = 135°, \text{acceleration} = \frac{4\pi^2n^2r}{3600}\left\{1 - \left(\frac{2l^2}{r^2} - 1\right)^{-3/2}\right\}\frac{1}{\sqrt{2}}$$

$$\theta = 90°, \text{acceleration} = \frac{4\pi^2n^2r}{3600}\left(\frac{l^2}{r^2} - 1\right)^{-1/2}.$$

EXERCISE. Test the method of construction described in Art. 336. To do this, notice that the horizontal distance from the curve III to GOG' represents the term in the above expressions which differs from what there would be with an infinitely long connecting rod. Let $A_1 0$, Fig. 309A, be called 1, and let $\frac{4\pi^2n^2r}{3600}$ be called 1 ; then it is easy to calculate that the horizontal distances from III to GOG are as follows :—distance from I^1 on the left to G^1 on the right being taken as positive.

θ	$l/r = 10$	$l/r = 6$	$l/r = 5$	$l/r = 4$	$l/r = 3$
0	− ·100	− ·167	− ·200	− ·250	− ·333
45°	·000	− ·001	− ·002	− ·004	− ·010
90°	+ ·100	·169	+ ·204	+ ·258	+ ·353
135°	·000	− ·001	− ·002	− ·004	− ·010
180°	− ·100	·167	− ·200	− ·250	− ·333

If the student will try, he will see that the easy rule of Art. 336, is sufficiently accurate for all practical purposes until the connecting rod is less than four times the length of the crank. Even when it is so short as only three times the crank, the error is not great.

341. Many geometrical constructions have been given. I do not say that the following one is better than another. I am no good judge, because I never use any of them myself. Indeed, I do not like to see a student using any of them, as I consider the very simple method of Art. 338 not only accurate enough, but very much better, because it keeps important general principles before one's mind.

AB is the connecting rod, BO the crank, OA the line of centres. Produce AB to meet in F the perpendicular OF. With J the middle of the connecting

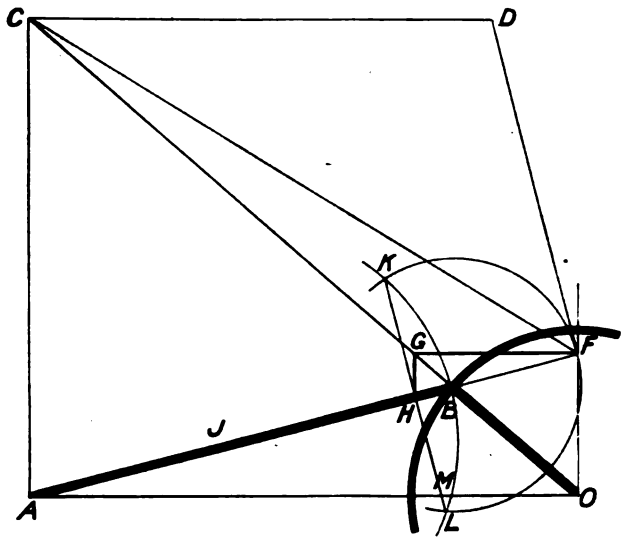

FIG. 313.

rod as centre, describe KBL meeting the circle KFL whose centre is B, in K and L. Join KL, cutting AO in M and AB in H.

To prove that

1. Velocity of piston in feet per second $= q \cdot FO$ if FO is measured in feet.

2. Acceleration of piston in feet per second per second $= q^2 \cdot MO$ if MO is measured in feet.

In fact if BO represents the centripetal acceleration of the crank pin, MO represents the acceleration of the piston on the same scale.

3. Angular acceleration of connecting rod, or $\frac{d^2\phi}{dt^2} = q^2 \cdot HM/AB$.

Draw AC perpendicular to AO, and let it meet OB in C. Draw CD parallel to AO, and FD at right angles to ABF.

From H draw HG parallel to OF, and join GF. Prove as a geometrical exercise that GF is parallel to AO.

Note that the figures $FGHMOF$ and $AOFDCA$ are similar, and OB in the one is similarly placed to CB in the other, so that $\frac{OB}{CB} = \frac{OM}{CD}$ or $\frac{OB \cdot CD}{CB} = OM$

1. The rod AB has C for its instantaneous centre, for CA is at right angles to A's motion, and CBO is at right angles to B's motion, so that

$$\frac{\text{velocity } v \text{ of } A}{\text{velocity } V \text{ of } B} = \frac{CA}{CB} = \text{and this is evidently } \frac{FO}{BO}.$$

Now $V = q \cdot OB$, and hence the proposition is proved.

2. Since $v = q \cdot OF$, the acceleration is $a = q \cdot \frac{d(OF)}{dt}$, or q times the velocity of the point F away from O. The velocity of F away from O may be studied in this way. F is a point in the connecting rod (produced), and C is the instantaneous centre. If α is the angular velocity of the rod, the velocity of F or $\alpha \cdot CF$ resolved along BF and OF will evidently give $\alpha \cdot DF$ and $\alpha \cdot CD$, if FD is drawn at right angles to AF and CD is parallel to AO or at right angles to OF (in fact FCD is a triangle of velocities whose sides are at right angles to the three velocities).

Now $\alpha = \frac{V}{CB}$, and hence acceleration a of the piston

$$= q \cdot \frac{V}{CB} \cdot CD = q^2 \cdot \frac{OB \cdot CD}{CB} = q^2 \cdot OM.$$

3. We see that $\frac{a}{q} = \frac{OB}{CB} = \frac{BF}{AB}$, or $a = \frac{q}{AB} \cdot BF$.

Hence $\frac{da}{dt} = \frac{q}{AB} \cdot \frac{d}{dt}(BF)$. But we have already shown that the velocity of F in the direction BF is $\alpha \cdot FD$.

Hence $\frac{d^2\phi}{dt^2}$ or $\frac{da}{dt} = q\alpha \frac{FD}{AB}$

$$q^2 \cdot \frac{OB}{CB} \cdot \frac{FD}{AB} = q^2 \frac{OB}{AB} \cdot \frac{FD}{CB} = q^2 \cdot \frac{OB}{AB} \cdot \frac{HM}{OB} = q^2 \cdot HM/AB.$$

342. Forces on the Frame of an Engine.—If it were possible to imagine the effect of the mass of the connecting rod to be the same as that of two masses at its ends, it would be easy to balance engines; it would also be very easy to make all sorts of calculations which are difficult to make in the real case. Now it is important to know to what extent the easy method of working is wrong. The student ought here to read again Art. 330.

If P is the resultant force from left to right on the piston, Fig. 314; if the distance of the piston or cross head to the right of the end of its stroke is s; if M is the total mass of the piston, and what is rigidly attached to it, then

$$P - M\ddot{s} = F$$

where $\ddot{s}$ is Newton's way of writing $\frac{d^2s}{dt^2}$,

is the resultant force acting on the brasses of the connecting rod at the cross head.

In estimating P we may assume a knowledge of friction as well as of the indicator diagrams. Or what is more usual, neglect the friction altogether.

Now if we dare imagine that the connecting rod acts as if its mass existed as its ends only, in portions m_1 at cross head and m_2 on crank pin, inversely proportional to the distances of the centre of gravity from these ends; we can readily imagine the m_2 part balanced like any other rotating mass by other

rotating masses, and the only part needing balance is m_1. In fact, in such a case we may say that, neglecting the forces of gravity :—

The turning moment on the crank shaft is $\{P - (M + m_1)\ddot{s}\}OQ$ where OQ is shown in Fig. 315.[1]

I shall now speak of the forces with which the ground acts upon the frame. As m_2 is supposed to be balanced, we see that :—

1. There is no total vertical force on the frame.

2. The horizontal force $(M + m_1)\ddot{s}$ can only be balanced by one or more equal and opposite forces. Now imagine this balance effected by a similar piston, cross-head, &c., exactly opposite to the first, as shown, for example, in Fig. 316 ; or by two such systems. Notice that for such exact balance the balancing systems cannot be on the same side of O, as $\ddot{s}$ must be the same.

3. If the balance (2) is effected, the balancing is complete ; there is no couple acting on the frame.

Now in the real case the effect of the motion of the connecting rod cannot be imagined to be exactly the same as that of the two detached masses m_1 and

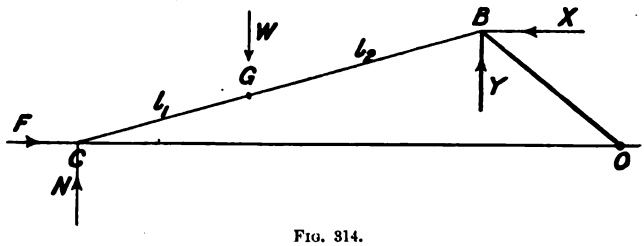

FIG. 314.

m_2, and this causes—*First*, an error in the above expression for the turning moment on the crank shaft : this error is not large ; in any case, fluctuations in the turning moment on the crank shaft are insignificant matters, except in very special cases. *Second*, an error which is only serious when we need very good balance : namely this, that in the real case, although the above statements 1 and 2 are correct, statement 3 is wrong. The student must see clearly what the amount of error in statement 3 is. I shall call it the **surging moment** on the frame. It is zero if the connecting rods are properly constructed.

343. The Real Case.—The figure (314) shows the connecting rod, CB, whose centre of gravity is at G ; the resultant horizontal force F acts at C ; and N is the normal component of the guiding force at C. Let us find X and Y the horizontal and vertical forces which must be exerted at B to produce equilibrium.

I prefer always to use Newton's law (sometimes called three laws) of motion —a fundamental principle which cannot be forgotten if once learnt—whereas the many special rules which lead to quick working of exercises are readily forgotten. If the distance of G horizontally to the right of some point is z, and if its vertical distance above the line of centres is y ; the horizontal and vertical

---

[1] It may be worth while for the student to write out the exact mathematical expression for $\ddot{s}$. OQ alone and to take a numerical example. Let him also work the following simple exercise :—Show that a mass W lb. at the cross-head of a steam engine produces a turning moment of $-Wn^2r^2 \sin 2\theta / 5872$ pound feet if the rod is infinitely long and rotation uniform.

acceleration of G may be written $\ddot{z}$ and $\ddot{y}$. Let m be the mass of the connecting rod, or W/g if W is its weight.

$$X = F - m\ddot{z} \quad . \quad . \quad . \quad . \quad . \quad . \quad . \quad (1)$$

$$N + Y = m\ddot{y} + W. \quad . \quad . \quad . \quad . \quad . \quad . \quad (2)$$

$$Xl \sin \phi + Yl \cos \phi = I\ddot{\phi} \quad . \quad . \quad . \quad . \quad . \quad (3)$$

if I is the moment of inertia of the rod about C, and ϕ is the angle BCO.

From (1) and (2) we see that the horizontal force X and the *total* vertical force $N + Y$, depend only on the mass of the rod and the position of its centre of gravity, and therefore that in so far as these are concerned we may replace the rod with two masses, m_1 and m_2 at its ends, if $m_1 l_1 = m_2 l_2$.

From (3) and (1) $$Y = \frac{I\ddot{\phi} - l \sin \phi (F - m\ddot{z})}{l \cos \phi} \quad . \quad . \quad . \quad . \quad . \quad . \quad (4)$$

If the actual calculations are made it is to be noted that

$$\ddot{z} = \frac{l_2}{l}\ddot{s} + \frac{l_1}{l} q^2 r \cos \theta, \quad \ddot{y} = -\frac{l_1}{l} r q^2 \sin \theta$$

$\ddot{s}$ being known from (3) of Art. 340 and $l = l_1 + l_2$.

It is easy to write out the expressions for the turning moment on the crank shaft and the centripetal force at B.

Now if I^1 is the moment of inertia with detached masses, $I^1 = m_2 l^2$. Whereas $I = m(k^2 + l_1^2)$. If k is the radius of gyration about G.

Hence for perfect equivalence, since $m = m_1 + m_2$ and $m_1 l_1 = m_2 l_2$, it would be necessary to have $k^2 = l_1 l_2$. [1]

This cannot be effected unless the **connecting rod extends beyond** the cross head, or the crank pin, or in both ways, or if the mass of the rod be spread out laterally, as suggested by Mr. Harrison, a method of construction which might very well be used if the surging couple applied to the frame work and ground is to be done away with. [I find that Mr. Holroyd Smith has also made this suggestion.]

In any case it is only the $I\ddot{\phi}$ part of (4) which would be **different with the detached masses.** We know that if we have already obtained balance and calculated turning moment on the crank shaft, assuming detached masses, we have only now to consider that part of Y which is represented by $(I - I^1)\ddot{\phi}/l \cos \phi$, or

$$\frac{m\ddot{\phi}}{l \cos \phi}(k^2 - l_1 l_2)$$

It is in the surging moment that the matter is really important, because there need be no surging moment with detached masses. The surging moment about any axis parallel to the crank shaft is

$$S = m(k^2 - l_1 l_2)\ddot{\phi} \quad . \quad . \quad . \quad . \quad . \quad . \quad (5)$$

The extra value of Y produces a turning moment on the crank shaft whose amount is

$$S \frac{r \cos \theta}{l \cos \phi} \quad . \quad . \quad . \quad . \quad . \quad . \quad . \quad . \quad (6)$$

---

[1] For $I = (m_1 + m_2)(k^2 + l_1^2) = m_2\left(\frac{l_2}{l_1} + 1\right)(k^2 + l_1^2) = m_2 l\left(\frac{k^2}{l_1} + l.\right)$

Hence $$\frac{k^2}{l_1} + l_1 = l = l_2 + l_1, \text{ or } k^2 = l_1 l_2.$$

344. Example. A crank is $r = 1{\cdot}25$ feet long; the connecting rod 276 lbs. weight, $l = 6{\cdot}25$ feet long, $l_1 = 3\frac{1}{2}$ feet, $l_2 = 2\frac{1}{2}\frac{1}{2}$ feet, so that $l_1/l_2 = \frac{5}{7}$; it has a radius of gyration about G such that $k^2 = l^2 \div 5^2 = 7{\cdot}8$ and $l_1 l_2 = 9{\cdot}7$.

(5) Becomes $-\dfrac{276}{32{\cdot}2}(1{\cdot}9)\ddot{\varphi}$, or $-\ 16{\cdot}28\,\ddot{\varphi}$

(6) Becomes $-\ 3{\cdot}26\ddot{\varphi}\dfrac{\cos\theta}{\cos\phi}$

If the speed is 120 revolutions per minute

$$\ddot{\varphi} = -\frac{4\pi^2(120)^2}{3600}\,\frac{\frac{1}{5}(1-\frac{1}{25})\sin\theta}{(1-\frac{1}{25}\sin^2\theta)^{3/2}}$$

As we wish only to obtain a fairly correct notion of the effect we shall neglect the small terms and write

$$\ddot{\varphi} = -\ 31{\cdot}58\sin\theta, \text{ and } \cos\phi = 1.$$

Hence (5) becomes $514\sin\theta$; (6) becomes $51{\cdot}6\sin 2\theta$.

345. Example. Let the mass of the connecting rod of last example be replaced by two detached masses at its ends without alteration of its centre of gravity. There will be a mass of $\dfrac{276}{32{\cdot}2} \times \frac{7}{12}$ or $4{\cdot}00$ moving with the acceleration $\ddot{s}$ and a mass $\dfrac{276}{32{\cdot}2} \times \frac{5}{12}$ or $4{\cdot}56$ on the crank pin. Let the centrifugal force of this mass on the crank pin be balanced. The horizontal forces can only be balanced by other horizontal reciprocating masses. Let us study merely the turning moment on the crank. We must multiply the force at the cross head $4{\cdot}00\,\ddot{s}$ by OQ in feet, Fig. 315. Or we may do the work numerically as follows :—

$$OQ = r\,\frac{\text{velocity of piston}}{\text{velocity of crank pin}} = \frac{rv \text{ of (6) Art.}}{rq}$$

$$OQ = 1{\cdot}25\{\sin\theta + \tfrac{1}{12}\sin 2\theta\} \text{ nearly}$$

also

$$\ddot{s} = -\ 197{\cdot}3\{\cos\theta + \tfrac{1}{2}\cos 2\theta\} \text{ nearly}$$

θ	$\ddot{s}$ acceleration of cross head.	OQ in feet proportional to velocity of cross head	$4{\cdot}00\,\ddot{s}\cdot OQ$ turning moment on crank shaft.	Extra turning moment $51{\cdot}6\sin 2\theta$.	Surging moment $514\sin\theta$.
0	$-236{\cdot}8$	0	0	0	0
45°	$-139{\cdot}5$	1·01	-564	51·6	363
90°	$+\ 39{\cdot}5$	1·25	197	0	514
135°	$+139{\cdot}5$	0·76	424	$-51{\cdot}6$	363
180°	$+157{\cdot}8$	0	0	0	0

The figures in the last two columns show in what way the real case differs from the easily considered case of two detached masses. The extra turning moment on the crank shaft is of but little importance, but the surging moment is a most serious matter. To be sure in such an engine it is only about 1 per cent. of the greatest probable turning moment on crank shaft; but our speed was comparatively small and these effects increase as the square of the speed.

346. Students may be interested in the following interesting graphical construction for the **finding of a single force** which represents the resultant

of all the accelerating forces on a connecting rod. It is due to Mr. Harrison of the Royal College of Science. He uses first any of the well-known methods of expressing the acceleration of the cross head.

$A\,O$ line of centres ; $A\,B$ connecting rod ; $B\,O$ crank.

Produce $A\,B$ to Q ($O\,Q$ is at right angles to $A\,O$) then $q.O\,Q$ is velocity of A.

Draw $Q\,S$ parallel to $O\,A$, $S\,H$ parallel to $Q\,O$, $H\,a$ at right angles to $A\,B$.

Join $a\,B$. Then $O\,a\,B$ is a diagram of accelerations (see my "Applied Mechanics," Art. 476), that is, take any point G in the rod, draw $G\,g$ parallel to $A\,O$, then g corresponds to G in such a way that $g\,O$ represents in direction and magnitude the acceleration of G to the same scale to which $B\,O$ represents the centripetal acceleration of the crank pin ; that is, if $g\,O$ is measured in feet the amount of the acceleration of G is $q^2.g\,O$. If G is the centre of gravity of the

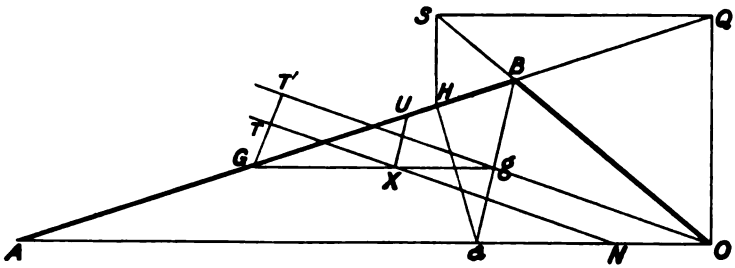

FIG. 315.

rod all the acceleration forces on the rigid rod are equivalent to a force through G parallel to $g\,O$ and of the amount $m.q^2.g\,O$, together with a couple, $L = mk.^2q^2\dfrac{Ha}{AB}$, where k is the radius of gyration of the rod about G. These are really equivalent to a force $mq^2.g\,O$ parallel to $g\,O$ acting, say, along $T\,N$, such that the perpendicular $GT = \dfrac{\text{couple}}{\text{force}}$. It will be found that if we take $GU = k^2/AG$ and draw $U\,X$ parallel to Ba, meeting Gg in X. Then :—

The resultant of all the acceleration forces in the rod is $mq^2.X\,N$, acting along $X\,N$ in the direction X to N.

Of course if we could make $k^2 = l_1 l_2$ so that the total acceleration force passes through O as is the case with detached masses, there would be balance in such a case as that of Fig. 316, where two cross heads and their cranks are exactly in line. Unless this condition is fulfilled (for example, as Mr. Harrison suggests, by prolonging the connecting rods) there is a surging couple acting on the frame of the engine and on the ground.[1]

---

[1] The proof of the above proposition is this :—

$$GT = mk^2q^2\frac{Ha}{BA} \Big/ mq^2.g\theta = k^2\frac{Ha}{g\theta.AB}$$

Now if $k^2 = l_1 l_2$ we have already seen that the connecting rod may be replaced by the mass m_1 at A and the mass m_2 at B, and under these circumstances the total resultant force must act through O and therefore must be like $T_1 g O$. But k^2 is less than $l_1 l_2$, and it is evident that the real T is such that $GT : GT^1 = k^2 : l_1 l_2 = GX : Gg$. Hence we have proved that the real force passes through X because we made $GU = k^2/l_1$, or $GU : GB = k^2 : l_1 l_2 = GX : Gg$.

We can now find a vertical force at A and some force at B to equilibriate the acceleration force of the rod and resolve the B force at right angles to and along the crank.

347. Using this construction one of my students, Mr. Rhind, has found the following answers:—He took $l = 4\frac{1}{3}r$ and $k = \frac{6}{13}l$. Also $BG : GA :: 11 : 15$; $F = O$.

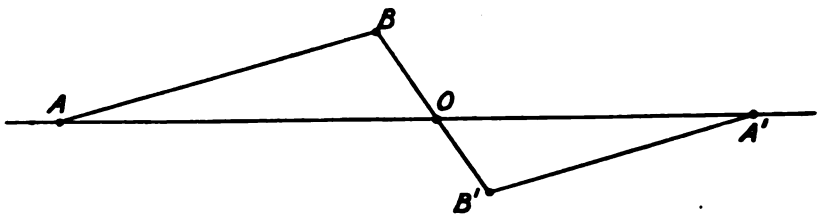

FIG. 316.

R is the radial force at the crank pin; R^1 is what it would be on the assumption of detached masses. Q is the force at right angles to the crank, or the crank effort, as it is sometimes called; Q' is what it would be on the assumption of detached masses.

Values of θ.	Inner dead point.	$22\frac{1}{2}$	45	$67\frac{1}{2}$	90	$112\frac{1}{2}$	135	$157\frac{1}{2}$	Outer dead point.
Q	0	·73	·86	·41	- ·32	- ·75	- ·70	- ·42	0
Q'	0	·74	·88	·32	- ·35	- ·68	- ·63	- ·33	0
R	3·31	2·92	2·10	1·49	1·48	1·85	2·30	2·63	2·75
R'	3·30	2·97	2·11	1·53	1·56	1·97	2·36	2·63	2·74

If these numbers are multiplied by $\frac{Wq^2}{32 \cdot 2}$, we get the forces in pounds, W being the weight of the rod in pounds, q being angular velocity of the crank in radians per second.

Figs. 317 and 318 show these results. The firm lines represent actual forces, the dotted lines show the result of our assumption of detached masses.

It seems to me that such close agreement as this warrants our often adopting the easy rule, especially when we know that in our most accurate calculations we must always be leaving out terms very much more important than any that we here neglect.

348. In Art. 65 I have given an example of how to deal with the indicator diagram of a single cylinder engine. Among other things we found a diagram of the turning moment on the crank shaft. A student ought to take the case of a double or triple expansion engine, and combine the diagrams to see how the turning moment is equalised when several pistons work the same shaft.

I shall not endeavour to make elaborate investigations. But it is worth while stating one or two important facts in regard to the **balancing of two and three cylinder engines.** We know the nature of the forces acting on the frame of a single cylinder engine. If quite unbalanced we have a force F in the line of centres $= m_1\ddot{x}$ and a centrifugal force on the crank pin m_2q^2r if m_1

is the mass of piston and rod, cross head and half (really the fraction l_2/l) of the connecting rod; q the angular velocity in radians per second, and r the length of the crank. We have no total force at right angles to the line of

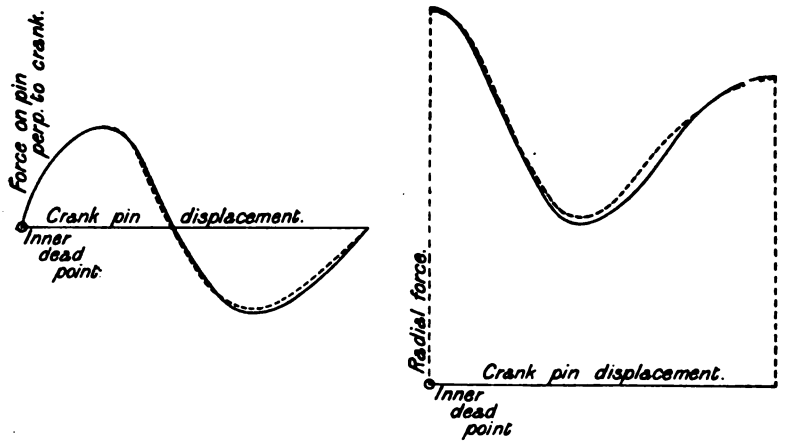

FIGS. 317 AND 318.

centres except the component of the centrifugal force, but we have a surging couple whose amount is very nearly $b \sin\theta$.

Here b stands for

$$-m(k^2 - l_1 l_2)\frac{4\pi^2 n^2}{3600}\;\frac{\frac{l}{r}\left(1-\frac{l^2}{r^2}\right)}{\left(1-\frac{l^2}{r^2}\sin^2\theta\right)^{3/2}}$$

and it is only very nearly a constant. m is mass of the connecting rod.

The first force I shall denote by

$$-m_1\left(\cos\theta+\frac{r}{l}\cos 2\theta\right),$$

the second by m_2 acting in the direction θ. Mere centrifugal force may be balanced, and it is possible to construct the connecting rod so as to destroy the surging couple.

TWO LINE ENGINE UNBALANCED.

Masses the same in both Lines.

What forces acting at a point on the axis of the shaft mid way will balance the inertia forces, distance apart $2a$?

I. Cranks at right angles.

1. Resultant force in line

$$= -m_1\left(\cos\theta+\frac{r}{l}\cos 2\theta\right)+m_1\left(\sin\theta+\frac{r}{l}\cos 2\theta\right) = m_1\sqrt{2}\sin(\theta+45^\circ)$$

2. Couple about vertical axis.

$$am_1\left\{-\left(\cos\theta+\frac{r}{l}\cos 2\theta\right)-\left(\sin\theta+\frac{r}{l}\cos 2\theta\right)\right\}$$

$$= -am_1\left\{\sqrt{2}\sin(\theta+45^\circ)+\frac{2r}{l}\cos 2\theta\right\}$$

3. Resultant centrifugal force $m\sqrt{2}$ in the direction $\theta+45$.

4. Couple due to centrifugal force $m_2 a\sqrt{2}$, about an axis which is at $\theta+45$ rotating.

5. Resultant surging couple $b\sqrt{2}\sin(\theta+45)$.

II. Cranks at 180°.

1. Resultant force in line

$$-m_1\left\{\cos\theta+\frac{r}{l}\cos 2\theta\right\}+m_1\left\{\cos\theta-\frac{r}{l}\cos 2\theta\right\}=-2m_1\frac{r}{l}\cos 2\theta.$$

2. Couple about vertical axis

$$-am_1\left(\cos\theta+\frac{r}{l}\cos 2\theta\right)+am_1\left(-\cos\theta+\frac{r}{l}\cos 2\theta\right)=-2am_1\cos\theta.$$

3. Resultant centrifugal force 0.

4. Couple due to centrifugal force, $2am_2$, about an axis which is at $\theta+90$ rotating.

5. Resultant surging couple 0.

Three Line Engine Unbalanced.

I. Cranks 120° apart. Distance of lines apart $=a$. The forces at the point where the middle centre line meets the axis are

crank at $\theta-120$, $m_1\left\{\frac{1}{2}\cos\theta-\frac{\sqrt{3}}{2}\sin\theta+\frac{r}{l}\left(\frac{1}{2}\cos 2\theta+\frac{\sqrt{3}}{2}\sin 2\theta\right)\right\}$

crank at $\theta+120$, $m_1\left\{\frac{1}{2}\cos\theta+\frac{\sqrt{3}}{2}\sin\theta+\frac{r}{l}\left(\frac{1}{2}\cos 2\theta-\frac{\sqrt{3}}{2}\sin 2\theta\right)\right\}$

crank at θ, $-m_1\left(\cos\theta+\frac{r}{l}\cos 2\theta\right)$.

1. Resultant force in line

$$0+0+0+0,$$

that is, it is less than my approximations take account of.

2. Couple about vertical axis

$$m_1a\left(\cos\theta+\frac{r}{l}\cos 2\theta\right)+m_1a\left\{\frac{1}{2}\cos\theta-\frac{\sqrt{3}}{2}\sin\theta+\frac{r}{l}\left(\frac{1}{2}\cos 2\theta+\frac{\sqrt{3}}{2}\sin 2\theta\right)\right\}.$$

$$=m_1a\sqrt{3}\left\{\cos(\theta+30)+\frac{r}{l}\sin 2(\theta+30)\right\}.$$

3. Resultant centrifugal force 0.

4. Couple due to centrifugal force. $\sqrt{3}\,m_2a$ about an axis coinciding with the intermediate crank.

5. Resultant surging couple

$$b\left\{\sin\theta+\sin(\theta+120)+\sin(\theta-120)\right\}=0.$$

If we take the other possible arrangements of the cranks we shall find that the forces are exactly the same if the engine runs in the opposite direction.

[I have just seen a paper by Messrs. Robinson and Sankey (Inst. Nav. Arch. 1895) in which they point out that a perfect balance may be obtained by the use of two three line engines or a six line engine. This is evidently true as (2) may thus be balanced.—*October 31st*, 1898.]

CHAPTER XXX.

KINETIC THEORY OF GASES.

349. In mathematical calculations concerning stress and strain in solid and fluid bodies, we imagine the stuff to be continuous and homogeneous; we assume that stress is proportional to strain; in fluids we assume a law of internal friction; our mathematical results are of value because in many cases in which we can test them they agree with actual fact. When we leave mere **mechanics,** which is the name given to a particular kind of exercise in **mathematics;** when we consider chemistry or heat and other forms of energy, we are compelled to frame theories of the actual molecular constitution of matter. It is no longer continuous homogeneous stuff to us; we are compelled to study its coarsegrainedness.

The theory that a gas consists of molecules which are rushing about among each other with all sorts of velocities, is accepted by us because it and it alone agrees with all the facts that are known to us. At any instant nearly all the molecules are so far away from each other (compared with their own sizes) that there is practically no mutual attraction and they move in straight lines; when they do encounter, whether this is like the collision of a pair of billiard balls or other elastic bodies, or whether it is that each molecule goes round the other as a comet goes round the sun without actual contact, there is a communication of momentum which we call a collision. **The history of one collision** is probably very complicated. In all probability the analogy of a molecule with a solar system or star is fairly complete. We may imagine the millions of years which elapse before a star comes sufficiently near another for a collision to occur, and we may imagine a very complicated and tedious kind of collision between two stars, each with its planetary system. We must replace millions of years by the millionth of the millionth of a second to obtain the analogy. In a cubic millimetre of gas there are probably a million million million of molecules, and each of them meets with collision on an average 7,000

million times per second. There are probably all sorts of velocities from zero to some that are indefinitely large. In hydrogen at ordinary temperatures the average velocity (the square root of the mean square of the velocity) is greater than 1 mile per second. Each molecule of a gas consists of atoms tied together by a mutual attraction. If the gas is water stuff, each molecule consists of two atoms of hydrogen and one of oxygen; this is the simplest image of the molecule that we have which will suit the observed facts. Higher temperature means on the average more and more violent collisions, although there must be violent collisions at any temperature; greater density or a greater amount of stuff in a given volume means that each molecule has a shorter free path and that more collisions must happen per second. The theory allows us to imagine that when a collision is violent there may be a divorce (**dissociation** it is called) between the atoms of a molecule, and divorced hydrogen atoms may go roaming round very ready to combine with divorced oxygen atoms, but it is not until very high temperatures are reached that the average collision is so violent as to maintain a large proportion of the atoms in a state of dissociation. This idea of divorce and marriage is a very good working idea for the engineer to have who wants to know what occurs in the furnace of a boiler, or in a gas or oil engine cylinder. He had better remember that it is only a useful sort of notion. It is, however, a fact that if carbonic acid CO_2 is heated to a high temperature, its p, v and t do not obey the laws of perfect gases nearly so well as at lower temperatures; that is if $\frac{pv}{t}$ be called R, then R increases in such a way that we are compelled to imagine a dissociation of CO_2 into carbonic oxide and oxygen (with disappearance of heat), just as at very high temperatures there is a dissociation of H_2O into hydrogen and oxygen, and it is said that although in ordinary ways of cooling the dissociated CO and O becomes CO_2 (the heat reappearing), yet when cooling is effected very suddenly the stuff remains dissociated. Students will recollect the phenomenon of recalescence in iron and its hardening when suddenly cooled, as probably analogous with these dissociation phenomena.

At the time of an encounter the **internal motions** of the atoms in each molecule must be very complicated; but afterwards each molecule is left vibrating in some way or ways perfectly definite for this particular kind of molecule. We know the periodicities of some of these internal vibrations from spectrum analysis. Probably the internal energy of a molecule is of many kinds. One kind, mere potential and kinetic energy of the atoms, seems to re-arrange itself in amount at every collision. I do not

want here to go beyond the simplest dynamical notions, but the earnest student had better perhaps break off from mere dynamical notions for a while and try to understand an electro-magnetic molecular theory of matter. To us, just now, internal molecular energy that may not become heat or re-arrange itself, after, at all events, a few millions of collisions, that is, in less than the thousandth of a second, is beyond our consideration.

350. The **energy of the gas** which we consider, is first the kinetic energy of translation or flight. The average amount of this in any one direction is the same as in any other. We imagine the total energy of flight to be divided into three equal parts, one for each of the three degrees of freedom of a point. There must be many internal degrees of freedom in a molecule. It has been shown by Maxwell that the total kinetic energy divides itself equally among the degrees of freedom. Mere points have only three degrees of freedom. Perfectly smooth spheres would for our present purpose be regarded as having only three degrees, because, although each sphere has really three other degrees, being capable of rotation, it cannot suffer any change in such energy of rotation; whereas if the surfaces were rough there would be three other degrees. Smooth Ellipsoids of revolution might be regarded as having five degrees of freedom. Notions of this kind are, however, to be used with caution. We cannot imagine anything analogous to a molecule in a homogeneous sphere or ellipsoid.

We are groping towards a way of seeing how Maxwell's theorem may help us to understand from the kinetic theory how it can be true that the internal molecular energy in a perfect gas should keep proportional to the kinetic energy of flight. If I knew clearly what I might speak about, I should say that as in flight there are three degrees of freedom and if the whole energy of flight is T, then if in the molecule there are f degrees of freedom, the total kinetic energy is

$$\frac{f}{3}T.$$

Unfortunately experimentally derived values of γ, the ratio of the specific heats, are such that this theory of Maxwell's leaves much to be explained, and therefore we shall put it, as Clausius did originally, that the average total energy of a molecule is β times its energy of flight. I include in this not merely the internal kinetic energy of a molecule, but internal potential energy, or all the kinds of energy with which we deal in the thermodynamics of a gas.

On the kinetic theory the law for a perfect gas $pv/t = R$ a con-

stant, is true only if we neglect all attractions of molecules for one another and also the volumes of the molecules; that is, assume perfectly straight free paths of infinitely small particles. By taking account of possible attractions as I do in Art. 352, **Van der Waals** has arrived at his well-known equation

$$\left(p - \frac{m}{v^2}\right)\left(v - n\right) = Rt$$

where m, n and R are constants; which, however, is not found to be altogether in agreement with experiment for all substances.

351. It can be shown that in a perfect gas:—

1. If m_1 is the mass of each of one kind of molecule and m_2 is the mass of another kind of molecule when two gases are in the same vessel and V_1 and V_2 are their velocities. The average value of $m_1 V_1^2$ is the same as the average value of $m_2 V_2^2$.

2. If v is the volume of unit mass of gas, so that m being the mass of one molecule and there being n molecules in unit volume, $mn = \frac{1}{v}$; then the pressure p being really rate per second at which momentum is communicated through unit area of any interface in a normal direction by molecules flying one way is

$$p = \frac{1}{3} mn V^2$$

or

$$pv = \frac{1}{3} V^2$$

where V^2 is the mean square of all the velocities.

It is evident that this enables us to calculate V for any of the permanent gases, and the student ought to make the calculation for hydrogen, oxygen, carbonic acid, and H_2O gas.

3. Since by (2), $pv = \frac{1}{3} V^2$, and as $pv = Rt$, then t stands for $V^2/3R$.

4. It is evident from (2) that as $\frac{1}{2} mn V^2$ is the kinetic energy of translation in unit volume, or $\frac{3}{2} p$, the kinetic energy of translation in unit mass is

$$\frac{3}{2} pv \text{ or } \frac{3}{2} Rt$$

And we take the total intrinsic energy to be β times this,

or

$$E = \frac{3}{2} \beta pv \text{ or } \frac{3}{2} \beta Rt$$

If volume is kept constant, gain of E when the temperature changes one degree, is the heat added, that is, it is the specific heat at constant volume,

or $$k = \frac{3}{2}\beta R$$

But we know that $K = R + k$, and hence

$$K = R + \frac{3}{2}\beta R \text{ or } R\left(1 + \frac{3}{2}\beta\right)$$

and hence $$\gamma = \frac{K}{k} = \frac{2}{3\beta} + 1 \text{ or } \beta = \frac{2}{3}\frac{1}{\gamma - 1}$$

The best method of finding γ is usually from experiments on sound. The following are known to be fairly accurately determined values of γ. The student is asked to calculate β in each case. He may also be sufficiently curious to calculate f (presumably degrees of freedom, in a crude application of Maxwell's theorem).

	Atomicity of Molecule.	Observed γ	Computed. β	Computed. f
Mercury (Hg)	1	1·67	1	3
Argon	1 (?)	1·65	1	
Hydrogen (H_2)	—	1·41		
Nitrogen (N_2)	—	1·41		
Carbonic oxide (CO)	2	1·40	$\frac{5}{3}$	5·0
Hydrochloric acid (HCl)		1·39		
Hydrobromic acid (HBr)	—	1·42		
Hydroiodic acid (HI)	—	1·40		
Chlorine (Cl_2)		1·32		
Bromine (Br_2)	2	1·29		
Iodine (I_2)	—	1·29	$\frac{7}{5}$	$6\frac{2}{3}$
Iodine Chloride (ICl)	—	1·31		
Carbonic acid (CO_2)	—	1·308	2	6·5
Nitrous oxide (N_2O)	3	1·310		6·5
Sulphuretted hydrogen (H_2S)		1·340	—	5·9
Carbon bisulphide (CS_2)	—	1·239	—	8·4
Ammonia (NH_3)	4	1·30	—	6·7
Methane (CH_4)	—	1·313	2·13	6·4
Methyl chloride (CH_3Cl)	—	1·279	2·4	7·2
Methyl bromide (CH_3Br)	5	1·274	2·43	7·3
Methyl iodide (CH_3I)		1·286	2·33	7·0
Methylene chloride (CH_2Cl_2)	—	1·219	3·07	9·2
Chloroform ($CHCl_3$)	—	1·154	4·33	13·0
Carbon tetrachloride (CCl_4)	—	1·130	5·13	15·4
Silicon tetrachloride ($SiCl_4$)	—	1·129	5·2	15·6

My reason for dwelling upon this matter and asking students to speculate on these results for themselves is this, that Mr. Macfarlane Gray asssumes that in a gas such as H_2O gas we must have $R:k:K$ in the ratios $2:5:7$, and everybody who gives thought to steam engine theory must have a good reason for his action if he disagrees with Mr. Gray. Experimentally I find that this ratio holds only approximately in the case of some of the transparent diatomic gases, and it is certainly not the case in the coloured diatomic gases. As H_2O is triatomic, we might expect the ratio of $K:k$ to be 1·31 to 1·34, or possibly as low as 1·239, but we have no *à priori* reason for thinking that it is 1·4. Indeed, the more we study the values of γ, or β, or f (a more complete[1] table of gases is given in a paper by Dr. Stoney, *Phil. Mag.*, Oct. 1895, and it is from his paper that I have taken the above numbers) the more disinclined are we to assume that we know anything about either molecular degrees of freedom or the meaning of Maxwell's law in the kinetic theory of gases.

352. It is worth while here to say something of the kinetic theory when attractions are not neglected. If a particle of mass m at x, y, z is acted on by a force X, Y, Z, then $m\ddot{x} = X$. **Clausius transformed** this by using $\frac{d^2}{dt^2}(x^2) = 2\dot{x}^2 + 2x\ddot{x}$, so that we find

$$\tfrac{1}{2}m\dot{x}^2 = -\tfrac{1}{2}Xx + \tfrac{1}{4}m\frac{d^2}{dt^2}(x^2)$$

Integrating from 0 to t and dividing by t we get mean values. If the motion is periodic, the mean value of the last term on the right hand side is zero. Even if not strictly periodic, if x and $\frac{dx}{dt}$ do not continually increase, the mean value of the last term gets to be smaller and smaller, and is negligible, and so we have, indicating averages by strokes,

$$\tfrac{1}{2}m\overline{\dot{x}^2} = -\tfrac{1}{2}\overline{Xx} \quad \ldots\ldots\ldots\ldots \quad (1)$$

Adding the three equations like (1) we get an expression for the kinetic energy of a particle. Adding the energies of all the particles we get total kinetic energy of the system

$$E = -\tfrac{1}{2}\Sigma(\overline{Xx} + \overline{Yy} + \overline{Zz}) \quad \ldots\ldots \quad (2)$$

Now we may distinguish between forces externally applied and internal forces. For example, let the uniform pressure p, exerted by a confining vessel of volume v, be the only external force

$$\Sigma X\,x = -p\int\int x\cos\alpha\,.\,dS = -p\int\int x\,.\,dy\,.\,dx = -pv,$$

if dS is an element of area of the bounding surface, α the angle made by the normal there to the axis of x. Hence for the external forces the right hand expression of (2) becomes $\frac{3}{2}pv$.

Now as to internal forces. If R is the attraction between two particles at x, y, z, and x', y', z', whose distance apart is r,

$$Xx + X'x' = \frac{x'-x}{r}Rx + \frac{x-x'}{r}Rx' = -\frac{(x'-x)}{r}R.$$

[1] Modified from Mr. Capstick's table, *Science Progress*, June, 1895.

Adding such similar expressions we see that the right hand expression of (2) becomes for the internal forces $\Sigma\frac{1}{2}Rr$. This is called the **virial** (or sometimes merely the internal virial, the whole right hand expression of (2) being called the whole virial). Hence (2) becomes ;—Total kinetic energy of the system

$$E = \tfrac{3}{2}pv + \tfrac{1}{2}\Sigma Rr \quad . \quad . \quad . \quad . \quad . \quad . \quad . \quad . \quad . \quad (3)$$

When the virial is not indefinitely small, pv is no longer constant when the temperature is constant if we assume that the temperature is proportional to the kinetic energy. Comparing (3) with experimental results we find that whereas in imperfect gases R is an attraction, in liquids the virial becomes negative and R is a repulsion. Further considerations of this kind led Van der Waals to his equation.

353. The study of the Van der Waals equation is recommended to students—in spite of its known incompleteness—because it does give fairly good notions of the behaviour of ordinary gases. It shows the way in which an actual gas differs in behaviour from what we call a perfect gas. We may imagine as the density gets greater how the free path gets shorter, and how collisions are more frequent until in the liquid state the molecules have no straight line paths, although they seem to be able to move about freely among each other, so that diffusion phenomena are explainable.

And yet how very crude these notions seem to be when we consider the enormous tensile forces which liquids are sometimes known to withstand, as if the repulsion which exists between molecules in the liquid state became a great attraction at slightly greater distances asunder. Again, in the solid state the roaming of molecules among each other seems to be quite given up; each seems to attract its neighbours with great cohesive forces. For what is known about molecular theory, the student must refer to advanced books on physics and chemistry. It must be of value in the study of heat engines. The student ought to have some molecular theory, simple or complex, which will enable him to imagine how things happen. To imagine how at the surface of a liquid some of the liquid molecules have sufficient velocity to jump out of the liquid, and how equilibrium is established when just as many of the vapour molecules get entangled in the liquid per second as there are others that jump out.

354. One of the most interesting things in connection with the kinetic theory of gases is its simple explanation of **viscosity**. We have only to imagine a great number of railway trucks moving near one another without friction, on many lines of rails at all sorts of speeds, crowded with men who are continually jumping from one truck to another; there is a continual communication of momentum, and momentum per second communicated is force—a force tending to the equalisation of the speeds of all trucks near one another, a

force of friction. The theory explains then, not only diffusion and conduction of heat in a gas, and viscosity, but how increase of temperature increases them all. In liquids, although at higher temperatures the diffusivity and probably the conductivity are greater, the viscosity is invariably less; and in all liquids except mercury, very much less. We believe that the study of the viscosity of liquids will lead us to better notions of molecular constitution.

355. What is capillarity? Of course the student knows the theory, probably in the form of the superficial tension analogy easily understood, as given, say, in Maxwell's book on Heat. But he must endeavour to have a private notion, however crude, of the cause of the phenomena, and how they are effected by electricity, for example. It is most important for us in connection with condensation and vaporisation when the liquid is in the shape of fine or large drops.

Water in a drop will evaporate more readily than if the surface were flat. Unless drops are so small that surface tension is altogether different in character from what it is in visible drops, if p is the pressure necessary to prevent evaporation, and p_0 is the pressure of saturated vapour corresponding to the temperature; if τ is the surface tension, r the radius of the drop, σ the density of the vapour, ρ that of the liquid; p is greater than p_0 by the amount

$$\tau \frac{\sigma}{\rho - \sigma} \frac{2}{r}.$$

This explains why in dust free space the saturation pressure may be greatly exceeded without condensation. Moist air free from dust may be suddenly expanded so that the pressure is many times the saturation pressure without the formation of cloud. The presence of electrified zinc or the passage of Röntgen rays or ultraviolet light or light from Uranium glass causes cloud to form. It is evident from these and many other observations that we are very far from having an exact knowledge of what occurs inside a steam engine cylinder. So also for a bubble of steam to get larger in water, the saturated pressure p_0 of the steam corresponding to its temperature must be greater than that of the water p by the above amount. One hardly sees how such a bubble could form were it not for 1, Dissolved gases. 2, Some action of the surface of the containing vessel or particles of foreign solid matter. Certainly there are cases known of drops of water existing surrounded by oil at atmospheric pressure, and 356° F., whereas the saturation pressure corresponding to this temperature is 10 atmospheres. Here we have evidence of great resistance to

tensile stress in water, and the phenomena of latent heat led Dupré to think that the tensile stress called into play in changing water into vapour is about 25,000 atmospheres. Water very free from air is now used in most boilers, and it is well to notice how in the Thorneycroft boiler the evaporation is assisted. It is this tendency to "boil with bumping" of air free water, that gives so much trouble in starting the fires of many marine boilers and makes artificial circulation so necessary.

356. So much for the behaviour of water and steam under **static conditions**; but we must expect that when sudden changes take place, say under the conditions which hold inside a steam engine cylinder, the ordinary static law connecting pressure and temperature of saturated steam is not merely not a guide, but is actually misleading. It seems almost impossible to study what goes on inside a steam engine cylinder unless we are allowed to imagine that all the stuff, vapour and water, is at the same temperature at every instant. In truth, however, as the temperature changes rapidly, even if we imagine the material of the cylinder to be itself non-conducting, there must be very curious differences of temperature in the fluid. Messrs. Callendar and Nicolson found that whilst the temperature shown by a thermometer in the body of the steam was nearly that of saturation corresponding to the pressure, the temperature shown by another thermometer inside the cylinder shows what we may regard as rapid superheating during cushioning and admission; whereas after a very rapid rise the temperature then fell rapidly, till it was well below the saturation temperature, just before cut-off began to take place. Professor Callendar has had so much experience of the measurement of temperature that we must look upon his measurements as probably correct, however much they may seem to conflict with our other notions. He has himself given a good explanation of the fall after expansion begins; but I cannot accept his view of the superheating, for it is practically impossible for me to imagine that the ordinary well-lagged cylinder using ordinary steam is ever free from water. The explanation of the drop is this. Any one who has worked a little with the $t\phi$ diagram knows that in the adiabatic expansion of a pound of water stuff, containing x lb. of steam and $1 - x$ lb. of water; if x is nearly 1, condensation occurs during expansion; if x is nearly 0, evaporation occurs. That is, the water tends to evaporate, and the steam tends to condense. Imagine, then, the struggle occurring at the surface of the water, and it becomes evident that if the expansion occurs rapidly there are really differences of temperature between one portion of the fluid and another.

We may imagine the hotter portions of water being converted into steam and cooler portions of the steam becoming water. If x is small, it is probable that on the whole the water is hotter than the saturation temperature corresponding to the pressure, and if x is large it is probable that on the whole the steam is cooler than the saturation temperature corresponding to the pressure. Anyhow, we have no right to assume the saturation temperature and pressure to exist throughout.

I have not here referred to the probable differences of temperature existing in a layer of water which gets thicker or thinner by condensation or evaporation. If the material of the cylinder were absolutely non-conducting, this layer is likely to be more uniform in temperature during the evaporation process than the condensation, a circumstance which tends slightly to diminish the amount of condensation in a steam engine cylinder.

CHAPTER XXXI.

THERMODYNAMICS.

357. WHEN we say that the state of a pound of stuff is defined by its p, v and t, we understand that it is all at the same temperature, and that it is a fluid, or at all events, can only experience the sort of strain or stress which a fluid can experience. Our assumption is that there is no molecular structure in the fluid. It has only elasticity of bulk. If it was in the state p, v, and gets into the state $p + \delta p$, $v + \delta v$, then $- \delta v/v$ is called its *compressive* strain, accompanying the increase of stress δp. Any kind of elasticity is defined as a stress divided by the corresponding strain, and hence fluids can only have the elasticity,

$$e = \delta p \div (- \delta v/v) \text{ or } - v \frac{dp}{dv} \quad . \quad . \quad . \quad . \quad . \quad . \quad (1)$$

The value of this may be o, if for example $\delta p = o$ and δv has any value. Again, it may be ∞, if for example $\delta v = o$ and δp has any value. There are two values of the elasticity which are considered more important than others, namely, the elasticity when temperature keeps constant, and this I shall call e_t; the elasticity when the stuff neither loses nor gains heat, and this I shall call e_H.

358. In all cases the state of a pound of stuff is completely known if we know two of the quantities, v, p or t, if these are independent variables. It is supposed that physicists and chemists have provided for us this knowledge; given p and v, or t and v, we can calculate or find the other of the three.

Any change of state is a change from p to $p + \delta p$, a change of v to $v + \delta v$, a change of t to $t + \delta t$; any of these increments being positive or negative. If two of the changes are known, the third can be calculated because we are supposed to know the characteristic; therefore the change of state is completely defined if we

know δv and δt, or δv and δp, or (except in case of change of state from solid to liquid or liquid to gas) if we know δt and δp.

In my calculus I have endeavoured to give in an easy way the idea underlying such a calculation as this:—Given δt and δv, infinitely small changes, to find δp, p being a function of t and v,

$$\delta p = \left(\frac{dp}{dt}\right)\delta t + \left(\frac{dp}{dv}\right)\delta v \quad \ldots\ldots\ldots \quad (1)$$

In the case of a perfect gas $\left(\frac{dp}{dt}\right) = \frac{R}{v}$, $\left(\frac{dp}{dv}\right) = -\frac{p}{v}$

and so

$$\delta p = \frac{R}{v}.\delta t - \frac{p}{v}.\delta v \quad \ldots\ldots\ldots\ldots \quad (2)$$

I gave examples: I took $t = 500$, $p = 2000$, $v = 14{\cdot}4$. Taking new values of t and v as follows, I could calculate the new p in each case quite accurately from $pv = Rt$. I wanted to see with what accuracy (2) would give the same answer, knowing that (2) is more and more true as δt and δv are made less and less and is not absolutely true unless δt and δv are smaller and smaller without limit.

t	v	true p	assumed δt	assumed δv	true δp	δp calculated from (2)
500	14·4	2000				
501	14·5	1990·2	1	0·1	−9·8	−9·9
500·1	14·41	1999·2	0·1	0·01	−1·0	−0·99
500·01	14·401	1999·9	0·01	0·001	−0·1	−0·10

In the same way, for any substance

$$\delta v = \left(\frac{dv}{dt}\right)\delta t + \left(\frac{dv}{dp}\right)\delta p \quad \ldots\ldots\ldots \quad (3)$$

$$dt = \left(\frac{dt}{dv}\right)\delta v + \left(\frac{dt}{dp}\right)\delta p \quad \ldots\ldots\ldots \quad (4)$$

Again, suppose that there is no change in p; put (1) = 0 and we have

$$\frac{dt}{dv} \text{ if } p \text{ does not alter} = -\left(\frac{dp}{dv}\right) \Big/ \left(\frac{dp}{dt}\right)$$

This is written as

$$\left(\frac{dt}{dv}\right) = -\left(\frac{dp}{dv}\right) \Big/ \left(\frac{dp}{dt}\right) \text{ or } -\left(\frac{dp}{dv}\right)\left(\frac{dt}{dp}\right) \quad \ldots\ldots \quad (5)$$

Similarly from (3),

$$\left(\frac{dt}{dp}\right) = -\left(\frac{dv}{dp}\right) \Big/ \left(\frac{dv}{dt}\right) \text{ or } -\left(\frac{dv}{dp}\right)\left(\frac{dt}{dv}\right) \quad \ldots\ldots \quad (6)$$

Similarly from (4),

$$\left(\frac{dv}{dp}\right) = -\left(\frac{dt}{dp}\right) \Big/ \left(\frac{dt}{dv}\right) \text{ or } -\left(\frac{dt}{dp}\right)\left(\frac{dv}{dt}\right) \quad \ldots\ldots \quad (7)$$

These statements are so new to some students that I advise them to illustrate what they mean by applying them all to the case of a perfect gas $pv = Rt$.

All the above merely follows from the mathematical fact that any two of p, v and t are independent, or that each of them is a function of the other two. In other words, there is some one law connecting p, v and t of one pound of any substance, although we may only know the law approximately for a limited range of states. This is also the same as "if a point in space represents by its three distances from the three standard planes the p, v and t of a pound of stuff, such points all lie in a surface." Students ought to practise the drawing of curves to express our knowledge of the behaviour of any stuff. They are supposed to have done this before beginning the study of steam engines. Thus, at any given temperature to draw a curve showing the p, v diagram of 1 lb. of steam at constant t from a superheated state until it is all liquid. The properties of carbonic acid are fairly well known to us, and its p, v (t constant), p, t (v constant), v, t (p constant) curves ought to be drawn. The drawing of the v, t (p constant) curve for water stuff from the ice to the superheated steam state at a few constant pressures is probably the most important exercise. My students have often drawn such curves (eking out the exact information of the books by guessing). They have then cut templates from one inch planks, 1 inch thickness representing 1 atmosphere; they have built these up with screws and glue carefully and chamfered off the edges, and so obtained a surface showing by its three co-ordinates the p, v, t of water stuff. This is more easily done for a perfect gas (the templates for p, t or v, t are quite straight and the whole work takes only a few hours), and a student hitherto called stupid will sometimes begin to take an interest in more abstract mathematics after he has marked out the places for which ϕ is constant. To merely read about the doing of these things is surely a weariness to the flesh. When a student has actually done the work it is nearly impossible for him not to know that both E and ϕ are the same if the state of the stuff is the same, and this means that he really knows the two laws of thermodynamics.

359. If we examine such a statement as (1) of Art. 191

$$\delta H = k\,.\,\delta t + l\,.\,\delta v$$

we must remember that it is only true if the change of state is considered to be smaller and smaller without limit. At the same time the two changes δt and δv are quite independent of one another; δv may be o, or δt may be o. It comes from the two assertions:—"the heat given to the stuff in any small change of state is calculable," and "we know the whole change of state when we know the change in t, and the change in v." As δv may be large or small compared with δt, let $\delta v = o$, then the heat is $k\,.\,\delta t$, so we see that $k\,.\,\delta t$ means "the heat given to the body during the change of temperature δt when the volume does not alter." Similarly $l\,.\,\delta v$ means "the heat given during the change δv, when temperature does not alter." Hence l is what may be called a latent heat of expansion, and k is the specific heat at constant volume. In the same way K is called the specific heat at constant pressure. The student must read such statements as (1), (2) and (3) of Art. 191 in several ways, trying to see exactly what each term means.

Now the three statements must agree in giving the same answer, and if we put them equal to one another in pairs we get relations between the co-efficients.

Thus $k.dt + l.dv = K.dt + L.dp.$

Substituting $dp = \left(\frac{dp}{dt}\right)dt + \left(\frac{dp}{dv}\right)dv$ from (1) of Art. 358, we have

$$k.dt + l.dv = K.dt + L\left(\frac{dp}{dt}\right)dt + L\left(\frac{dp}{dv}\right)dv.$$

This is true when $dv = o$, and also when $dt = o$, so that

$$k = K. + L\left(\frac{dp}{dt}\right) \quad . \quad . \quad . \quad . \quad . \quad . \quad . \quad (1)$$

$$l = L\left(\frac{dp}{dv}\right) \quad . \quad . \quad . \quad . \quad . \quad . \quad . \quad . \quad (2)$$

Again, putting $k.dt + l.dv = P.dp + V.dv$ and substituting

$$dp = \left(\frac{dp}{dt}\right)dt + \left(\frac{dp}{dv}\right)dv$$

we have $$k.dt + l.dv = P\left(\frac{dp}{dt}\right)dt + P\left(\frac{dp}{dv}\right)dv + V.dv$$

so that $$k = P.\left(\frac{dp}{dt}\right) \quad . \quad . \quad . \quad . \quad . \quad . \quad . \quad . \quad . \quad (3)$$

and $$l = P\left(\frac{dp}{dv}\right) + V \quad . \quad . \quad . \quad . \quad . \quad . \quad . \quad (4)$$

The student ought to write out another equality of the expressions of Art. 191 and get two other relations; also he may use other substitutions than what I have adopted. In this way he will obtain other relations, but he must not hope to find them all independent. For example, he will find

$$k + l\left(\frac{dv}{dt}\right) = K \quad . \quad . \quad . \quad . \quad . \quad . \quad . \quad (5)$$

and $$l\left(\frac{dv}{dp}\right) = L \quad . \quad . \quad . \quad . \quad . \quad . \quad . \quad (6)$$

and again $$K\left(\frac{dt}{dp}\right) + L = P \quad . \quad . \quad . \quad . \quad . \quad (7)$$

$$K\left(\frac{dt}{dv}\right) = V \quad . \quad . \quad . \quad . \quad . \quad . \quad (8)$$

but he might have found these by proper combinations of those already found. It is to be noticed that for so far we have only

employed algebra; we have assumed the existence of some law connecting p, v and t, and that δH is calculable, but the above relations are true algebraically even if we do not call H, heat; or v, volume; or t, temperature.

360. Exercise. The elasticity at constant temperature is $e_t = -v\left(\frac{dp}{dv}\right)$. To write out e_H it is necessary to find the relation between δp and δv when δH is o. Now

$$\delta H = P.\delta p + V.\delta v$$

so that when δH is o, $\frac{dp}{dv}$ is $-\frac{V}{P}$, and hence

$$e_H = v\frac{V}{P}$$

Thus $\frac{e_H}{e_t} = -\frac{V}{P} \div \left(\frac{dp}{dv}\right)$. Taking V from (8) above and P from (3)

$$\frac{e_H}{e_t} = -K\left(\frac{dt}{dv}\right)\left(\frac{dp}{dt}\right) \div k\left(\frac{dp}{dv}\right).$$

But, as we have already seen in (5) of Art. 358

$$\left(\frac{dp}{dv}\right) \div \left(\frac{dp}{dt}\right) = -\left(\frac{dt}{dv}\right)$$

and hence *for any substance*

$$\frac{e_H}{e_t} = \frac{K}{k} \quad \ldots\ldots\ldots \quad (9)$$

This ratio I always denote by the letter γ.

Again, note that we have an important general statement which depends only on our definition of elasticity, and is merely algebraic, for what we call elasticity may have no physical meaning. We give it a physical meaning when we say what v and p and H mean.

361. We leave mere algebra when we say: if $\delta H - p.\delta v$ be called δE; then δE is a complete differential, that is, the value of the E of a body depends on the state of the stuff. Now it is shown in elementary calculus books that if

$$M.dx + N.dy$$

is a complete differential, $\left(\frac{dM}{dy}\right)_x = \left(\frac{dN}{dx}\right)_y$; and hence if we subtract $p.\delta v$ from any of the expressions of Art. 191, and apply this criterion, we have three expressions for the **first law of thermodynamics.**

Thus $dE = dH - p.dv = k.dt + (l - p)dv$. The first law is then

$$\left(\frac{dk}{dv}\right)_t = \left(\frac{dl}{dt}\right)_v - \left(\frac{dp}{dt}\right) \quad . \quad . \quad . \quad . \quad (10)$$

or using $dE = dH - p.dv = P.dp + (V - p)dv$

$$\left(\frac{dP}{dv}\right)_p = \left(\frac{dV}{dp}\right)_v \quad . \quad . \quad . \quad . \quad (11)$$

With not much more trouble we find

$$\left(\frac{dK}{dp}\right)_t - \left(\frac{dL}{dt}\right)_p = \left(\frac{dv}{dt}\right) \quad . \quad . \quad . \quad . \quad (12)$$

Any one of (10), (11) or (12) may be called the first law of thermodynamics, as it is common enough to see a partial statement called a general law. The real first law is, however, "dE is a complete differential."

Now let us apply **the second law.** Divide each of (1), (2) and (3) of Art. 191 by t, and let $\frac{dH}{t}$ be called $d\phi$, and make the statement that $d\phi$ is a complete differential. Thus

$$d\phi = \frac{dH}{t} = \frac{k}{t}.dt + \frac{l}{t}dv$$

The criterion after multiplying by t gives

$$\left(\frac{dk}{dv}\right)_t = \left(\frac{dl}{dt}\right)_v - \frac{l}{t} \quad . \quad . \quad . \quad . \quad . \quad . \quad (13)$$

Combining (13) and (10) we have

$$\frac{l}{t} = \left(\frac{dp}{dt}\right) \quad . \quad . \quad . \quad . \quad . \quad . \quad . \quad . \quad (14)$$

Let the student show also that when (14) is combined with the criterion and the earlier equations we have,

$$\left(\frac{dk}{dv}\right)_t = t\frac{d^2p}{dt^2} \quad . \quad . \quad . \quad . \quad . \quad . \quad . \quad . \quad (15)$$

$$\left(\frac{dv}{dt}\right) = \left(\frac{dK}{dp}\right)_t - \left(\frac{dL}{dt}\right)_p = -\frac{L}{t} \quad . \quad . \quad . \quad (16)$$

and

$$\left(\frac{dK}{dp}\right)_t = -t\frac{d^2v}{dt^2} \quad . \quad . \quad . \quad . \quad . \quad . \quad . \quad . \quad (17)$$

Also

$$\left(\frac{dV}{dp}\right)_v - \left(\frac{dP}{dv}\right)_p = \frac{1}{t}\left\{V\left(\frac{dt}{dp}\right) - P\left(\frac{dt}{dv}\right)\right\} = 1 \quad (18)$$

It immediately follows from (15) and (17) that

$$k = \mathbf{k} + t\int\frac{d^2p}{dt^2}.dv \quad . \quad . \quad . \quad . \quad . \quad (19)$$

$$K = \mathbf{K} - t\int\frac{d^2v}{dt^2}.dp \quad . \quad . \quad . \quad . \quad . \quad (20)$$

where $\mathbf{k}$ and $\mathbf{K}$ are *functions of the temperature only.*

362. Exercise 1. Show what the above relations become when a substance follows the law $pv = Rt$. Number the corresponding equations in the same way and keep the results for reference. Note that neither K nor k is necessarily a constant, but if either is constant, the other is so also. If not constant they must be functions of temperature only. Our answers are:—

$$l = t\frac{R}{v},\ L = -v.$$

$K - k = R$, and the expressions (1), (2), (3), of Art. 191 may be written

$$dH = k.dt + p.dv = K.dt - v.dp = \frac{1}{\gamma - 1}d(pv) + p.dv$$

Also

$$\phi - \phi_0 = k\log t + R\log.v;\ E - E_0 = k(t - t_0)$$

$$H_{10} = \frac{1}{\gamma - 1}(p_1v_1 - p_0v_0) + \text{work done.}$$

If expansion occurs according to the law pv^s constant,

$$\text{Heat given during expansion} = \frac{\gamma - s}{\gamma - 1} \times \text{work done.}$$

or

$$\frac{dH}{dv} = \frac{\gamma - s}{\gamma - 1}p = h \text{ say.}$$

Hence if h is o, that is, if the expansion is adiabatic, s is γ.

The student ought to express ϕ in terms of p and v, and also of p and t, and show that an adiabatic may be expressed in any of the ways pv^γ or $tv^{\gamma-1}$ or $pt^{\gamma/(1-\gamma)}$ constant. See Art. 201.

363. Exercise 2. There is only one way that I know of, in the absence of fresh experiments, to determine the value of K for H_2O as gas. It is to assume that saturated steam at low temperatures and pressures is in the gaseous state. It is easy to show that this assumption must be very nearly correct, for the volume pressure and temperature of saturated steam satisfy the law for a perfect gas more and more closely at lower temperatures. Taking the atomic weight of oxygen as 15·88, we have

$$\frac{pv}{t} = R = 153{\cdot}8.$$

This 15·88 I have taken under the advice of authoritative chemists. We have from the above equations for a perfect gas

$$\frac{d\phi}{dt} = \frac{K}{t} - \frac{v}{t}\frac{dp}{dt}$$

Now let us suppose that $\frac{dp}{dt}$ is according to saturation, so that if λ is the usual latent heat, $v\frac{dp}{dt} = \frac{\lambda}{t}$, see Exercise 5, and hence

$$\frac{d\phi}{dt} = \frac{K}{t} - \frac{\lambda}{t^2} \text{ or } = \frac{K}{t} - \frac{797}{t^2} + \frac{\cdot 695}{t} \quad . \quad . \quad (1)$$

using Regnault's formula. But the entropy of a pound of saturated steam is

$$\phi = \log \frac{t}{t_0} + \frac{\lambda}{t}$$

so that

$$\frac{d\phi}{dt} = \frac{1}{t} - \frac{797}{t^2} \quad . \quad . \quad . \quad . \quad . \quad . \quad . \quad (2)$$

Writing (1) and (2) equal, we find $K = \cdot 305$, and as $\frac{R}{J} = \cdot 11$ we have $k = \cdot 195$. I take these to be the specific heats of superheated steam about 0° C., and their ratio is 1·55. If we take Griffiths instead of Regnault, K is ·399, k is ·289, and their ratio is 1·38.

364. EXERCISE 3. Show what the above relations become when a substance follows the law

$$p = bt + a$$

where a and b are functions of *volume* only.

It will be seen that the equation of Van der Waals, Art. 350, is of this form, because we can write it as

$$p = \frac{Rt}{v - n} + \frac{m}{v^2}$$

In the first place, since $\left(\frac{dp}{dt}\right) = b$ and $\frac{d^2p}{dt^2} = 0$, we see from (19) Art. 361, that k is a function of t only. Also from (14), $l = tb$ or $l = p - a$, and therefore

$$dH = k \,.\, dt + tb \,.\, dv$$

gives

$$d\phi = \frac{dH}{t} = \frac{k}{t} \,.\, dt + b \,.\, dv$$

Or ϕ = a function of t only + a function of v only.

Also since $dE = dH - p \,.\, dv = k \,.\, dt + (tb - p)dv = k \,.\, dt - a \,.\, dv$, we have, E = a function of t only + a function of v only.

Also

$$K = k + tb\left(\frac{dv}{dt}\right) = k - tb^2/\left(\frac{dp}{dv}\right)$$

365. EXERCISE 4. Ramsay states that e_H, the adiabatic elas-

ticity, is a linear function of t if the volume is constant, and that the law assumed in Exercise 3 is generally true of all substances. Show that these statements are consistent with one another.

Since $$\frac{e_H}{e_t} = \frac{K}{k} \text{ or } e_H = -v\left(\frac{dp}{dv}\right)\frac{K}{k}$$

we find $$e_H = v\left\{\frac{tb^2}{k} - t\frac{db}{dv} - \frac{da}{dv}\right\} = \alpha + \beta t,$$

say, where α and β are functions of volume only.

It will be found that this requires

$$k = tb^2/\left\{\frac{\alpha}{v} + \frac{da}{dv} + \left(\frac{\beta}{v} + \frac{db}{dv}\right)t\right\}$$

and hence if

$$\frac{\alpha}{v} + \frac{da}{dv} = Ab^2$$

$$\frac{\beta}{v} + \frac{db}{dv} = Bb^2$$

where A and B are constants, the two statements are consistent with one another, and give

$$k = \frac{t}{A + Bt}$$

a function of the temperature. On this assumption k is nearly proportional to the temperature when the temperature is small, but at very high temperatures tends towards a limiting value $1/B$.

366. EXERCISE 5.—Apply our equations to the case of a pound of stuff in a lower state (solid or liquid) at volume s_1 changing to a higher state (liquid or vapour) at volume s_2 at constant temperature receiving latent heat λ.

Since $$dH = k.dt + l.dv,$$

or by Art. 361, $$= k.dt + t\left(\frac{dp}{dt}\right)dv$$

as the stuff is present in both states, $\frac{dp}{dt}$ is the same whether v is constant or not.

If t is constant,

$$dH = t\left(\frac{dp}{dt}\right)dv$$

or $$\lambda = t\left(\frac{dp}{dt}\right)(s_2 - s_1) \quad . \quad . \quad . \quad . \quad (1)$$

if λ is the usual latent heat.

367. EXERCISE 6. Show from the last result that at the melting point of ice, as s_1 is greater than s_2, since $s_2 - s_1$ is negative, and λ and t are positive, $\frac{dp}{dt}$ must be negative. When ice melts at 0° C., or $t = 274$, $s_1 = \cdot01747$, $s_2 = \cdot01602$, p being atmospheric pressure, or 2,116 lbs. per square foot, and $\lambda = 79 \times 1393$. Show that

$$\frac{dp}{dt} = -277{,}300.$$

That is, pressure lowers the melting point of ice at the rate of 131 atmospheres for one degree Centigrade.

368. EXERCISE 7. The volume of 1 lb. of water at 374° F. is 0·018 cubic feet, and Rankine found by the above calculation that the volume of 1 lb. of steam is 2·476 cubic feet. He took Joule's equivalent as 772 and $L = 849$ heat units (F.) What value must he have taken for $\frac{dp}{dt}$? *Answer* 319.

CHAPTER XXXII.

SUPERHEATED STEAM.

369. Regnault's Total Heat. In steam engine calculations we depend upon Regnault's measurements for temperatures above 100° C. There are no others. We may have doubt as to whether he really used the unit of heat which he thought he used, but we must make the best of what he gives us. It is for this reason that I employ the Regnault unit of heat throughout this book, and I have said frankly that my only knowledge of it is that 100·5 of Regnault's units are equivalent to 100 of those of Reynolds, whose Joule's equivalent (778 in the Fahrenheit scale) is 1,399 London foot-pounds. Hence my Joule throughout is 1,393 London foot-pounds (or 774 for the Fahrenheit unit). My trouble begins when I consider Regnault's results below 100° C., because there have been other experiments and the results are said to conflict.

Our knowledge of H from 63° C. to 88° C. is based on twenty-three observations of Regnault. Assuming, as he did, that there is a linear law connecting H and θ, I find $\frac{dH}{d\theta} = 0{\cdot}379$, the mean temperature being 77°·55 and the mean H being 627·9. In fact, these twenty-three measurements give me

$$H = 598{\cdot}61 + {\cdot}379\ \theta.$$

Regnault's thirty-eight measurements from 99°·27 C. to 100°·37 C. give a mean temperature 99°·88 C. and a mean value of H, 636·67.

Mr. Griffiths has found the latent heats of steam 572·60 at 40°·15 C. and 578·70 at 30° C., and I infer from his paper that his values of H are 612·75 and 608·70. It is not easy to say how we ought to compare his unit (the heat for a degree on the nitrogen thermometer at 15° C.) with what I take to be Regnault's; but I find that the above numbers agree with a formula which he gives later, in which he uses as the value of Joule's equivalent $J = 4{\cdot}199 \times 10^7$. Now the J which I use for Regnault's units corresponds to $4{\cdot}165 \times 10^7$ Ergs (per gramme degree Centigrade). Hence I

take it that the values of H given by Mr. Griffiths need to be multiplied by 4199/4165 if they are to be compared with Regnault's. They are therefore 617·74 at 40°·15 and 613·65 at 30°.C. mean 615·7 at 35°·075 C.

Between Griffiths' mean and Regnault's 627·9 at 77°·55

$$\frac{dH}{d\theta} = 0{\cdot}287.$$

Between Griffiths' mean and Regnault's 636·67 at 99°·27 we find $\frac{dH}{d\theta} = 0{\cdot}327$. The mean of these values is 0·307.

Now I am aware that there is more certainty as to the measurements made by Mr. Griffiths, and that the units of the measurement made by Regnault below 100° C. are not well known, and his method of measurement between −2° C. and 16° C. is open to criticism; but it will be seen by the above that **if we are to keep to Regnault's units,** we cannot do better for the present than to keep to his formula in which $\frac{dH}{d\theta}$ is the same for all kinds of steam, namely, ·305, not merely above 100° C., where we have nothing but Regnault, but also below 100° C., where Regnault cannot be regarded as altogether inconsistent with what Mr. Griffiths himself gives. I may at the same time say that although I cannot use Mr. Griffiths' formulæ between 0° and 100° C.,

$$\text{total heat } H = 596{\cdot}73 + {\cdot}3990\ \theta$$
$$\text{latent heat } l = 596{\cdot}73 - 0{\cdot}6010\ \theta,$$

his suggestion of their use causes me to feel that there is in the repetition of Regnault's work an excellent investigation waiting to be done by some National Physical Laboratory. Such an investigation ought to include the determination of the characteristic law for superheated steam and its specific heat.

370. Superheated Steam.—It will be seen in Art. 207 and elsewhere that it is very important for us to know with some accuracy what is the specific heat of superheated steam. Regnault's experiments give conflicting results. Thus when at atmospheric pressure he cooled steam at 225° C. to 125° C., the average specific heat seemed to be 0·48, a figure which is very generally taken to be nearly correct under all circumstances and of which great use is made; whereas when he cooled it from 124° C. to 100° C., Mr. Macfarlane Gray has shown that the average result was 0·378, although everybody uses 0·48. I cannot admit with Mr. Gray that we have any right to assume that we can calculate the specific heat of any gas from the atomic weight. See Art. 351.

We always assume that a superheated vapour, that is, a vapour at a higher temperature than that which corresponds to its pressure in the saturated or mixed condition, gets to be more and more nearly like a perfect gas in its p, v, t relations, the greater its temperature and its volume. I should be satisfied with this vague sort of knowledge about superheated steam, if it were not that a more exact knowledge of the p, v, t law is necessary before we can make exact statements about the specific heat.

On certain assumptions which have no experimental foundation, Hirn, Zeuner, Ritter and others have obtained formulæ which have been made to fit **Hirn's experimental numbers.**

To find the density of superheated steam Hirn weighed a vessel containing the steam. His results are given in Table IV. at the end of his "Exposition analytique et expérimentale de la Théorie mécanique de la Chaleur." I know of no other measurements on superheated steam except those of Regnault, who measured the specific heat at atmospheric pressure. I give in Art. 371, Hirn's results, converting u into cubic feet per pound.

On any assumption, if we could obtain a simple empirical formula satisfying our facts it would be valuable, and some of the formulæ given are supposed to agree with Hirn's results fairly well. It seems to have been forgotten by the framers of these formulæ and by those who calmly accept such formulæ, that the formula of a perfect gas must always agree fairly well with the results, and that the test of a more correct formula is not as to whether it is nearly right for u the volume, but for $v - u$, where v is the volume of a pound of H_2O as gas at the same pressure and temperature. Subjected to this test, I find that all the formulæ are as much as 16 per cent. wrong; and it is easy to obtain many other simple formulæ which are just as correct, but it would be very foolish to assume that any one of them is of value from the point of view of thermodynamic theory.

From the point of view of thermodynamic theory we should be glad to obtain either

v as a linear function of t, when p is constant . . . (1)

or

p as a linear function of t, when v is constant . . . (2),

because it is evident from (19) and (20), Art. 361, that (1) means

K a function of t only,

and (2) means

k a function of t only.

Dr. Ramsay asserts that for all vapours (2) is true; and we have

seen in Art. 365 that this is not inconsistent with his assertion that the adiabatic elasticity is a linear function of t when v is constant.

(2) is certainly not in accordance with Hirn's experimental results on superheated steam. To test it I took one of Hirn's volumes, 27·87 when $t = 392·2$ and $p = 2116$; for the same volume saturated steam has $t = 372·2$ and $p = 2010$. If (2) is true or

$$p = bt + a,$$

where b and a are functions of volume only; then for $u = 27·87$, $a = 37$, $b = 5·30$. Doing this for many of Hirn's observations, I found that a could not be consistently regarded as a function of the volume. Thus I obtained

vol. u	29·63	27·87	11·16	9·215	8·362	7·723	6·631	6·019
a	5	37	-·335	-1·424	-·962	-2·390	-·209	-1·786
b	5·09	5·30	14·11	19·42	19·90	24·75	22·54	28·51

so that a is evidently no function of the volume.

It may be imagined that if the general rule (2) fails so seriously, the special form of it invented by Van der Waals will fail more seriously still, and this I have found to be so. When we try (1) above, we obtain what seems to me a better consistency. In trying (2) we had only two observations from which to determine each a and b, whereas in testing (1) we have in some cases many observations; and it may be that it is on this account that (1) seems more consistent than (2).

Taking

$$u = bt + a$$

where b and a are functions of p only, we obtain the following results:—

p in atmos.	1	2¼	3	3½	4	5
a	1·29	-0·10	-1·23	-1·70	-0·70	-0·45
b	0·068	0·0309	0·0259	·0239	0·0189	0·0148

In carrying out this work it became evident that the discrepancies in a were largely due to Hirn's errors of measurement; and certainly there is no disproof of the law (1), although, indeed, we cannot say that there is proof of it. I am disposed to think that neither (1) nor (2) is true, but that (1) is so much more nearly true than (2) that we may assume it true until we get further evidence.

371. It is on the whole better to test the **discrepance from the gaseous law.** The following Table shows the values of $\frac{Rt}{p} - u$ both for Hirn's results and for saturated steam at the same pressure. For each pressure I have plotted $v - u$ (calling $\frac{Rt}{p}$, v) and temperature, and it at once becomes evident that we can deduce no law from Hirn's results.

HIRN'S EXPERIMENTS.

p atmos.	θ° C.	Hirn's u	p lb. per sq. ft.	t absol.	v cub. ft. per lb.	$Rt/p - u$.
1	118·5	1·74	2116	392·2	27·87	0·62
,,	141	1·85	2116	414·7	29·64	0·49
,,	148·5	1·87	2116	422·2	29·95	0·73
,,	162	1·93	2116	435·7	30·91	0·70
,,	200	2·08	2116	473·7	33·32	1·11
,,	205	2·14	2116	478·7	34·28	0·50
,,	246·5	2·289	2116	520·2	36·66	1·15
2·25	200	0·92	4762	473·7	14·73	·57
3	200	0·697	6349	473·7	11·165	0·315
3·5	196	0·591	7407	469·7	9·466	·206
,,	201	0·6035	7407	474·7	9·668	·104
,,	225	0·636	7407	498·7	10·188	0·162
,,	246·5	0·6574	7407	520·2	10·531	0·269
4	165	0·4822	8465	438·7	7·724	0·245
,,	200	0·522	8465	473·7	8·362	0·242
,,	225	0·539	8465	498·7	8·634	·423
,,	246·5	·5752	8465	519·7	9·214	0·227
5	160	·3758	10582	433·7	6·020	·282
,,	200	·4095	10582	473·7	6·558	·324
,,	205	·414	10582	478·7	6·632	0·323

The following values are for the saturated condition, multiplying Rankine's u by 774/772:—

p atmos.	θ° C.	p lb. per sq. ft.	t absol.	u cub. ft. per lb	$Rt/p - u$.
1	100	2116	373·7	26·43	0·73
2¼	124·35	4762	398·1	12·33	0·52
3	133·6	6349	407·3	9·43	0·435
3½	139·23	7407	412·9	8·15	0·422
4	144	8465	417·7	7·19	0·396
5	152·3	10582	426	5·83	0·36

In calculating v which is Rt/p, I use $t = \theta + 273·7$, p in pounds per square foot and $R = 153·8$ to suit an atomic weight of oxygen of 15·88. Hence, v, p and t are the volume pressure and temperature of H_2O as a perfect gas. I had been in hopes that $v - u$ might be expressed as some simple function of pressure and temperature, or perhaps that $\frac{v - u}{v}$ might be so expressed.

There is no ground for any such assumption—a very much

simpler one is all that is warranted by the experiments. Take 1 atmosphere

θ° C.	100°C.	118°·5	141°	148°·5	162°	200°	205°	246°·5
$v-u$	·73	·62	·49	·73	·70	1·11	0·50	1·15

The mean of these eight observations 0·75, is almost exactly the value of $v-u$ at saturation.

We have only single observations of superheated steam at 2·25 and at 3 atmospheres. These conflict with one another when we compare them with $v-u$ at saturation, one showing an increase of $v-u$ with temperature, the other a diminution. But in view of the great number of results for one atmosphere which are so obviously unreliable, I feel quite sure that we cannot build upon any of these results of Hirn.

At 3·5 atmospheres Hirn's own results show no law, only inconsistency. But they are all lower than $v-u$ for saturation. It is only on the assumption, therefore, of the saturation value being correct that we get grounds for any assumption except constancy in $v-u$.

At 4 atmospheres we have the following values:—

θ° C.	144	165	200	225	246·5
$v-u$	·396	·245	·242	·423	·227

Nothing but taking a mean can here satisfy us. But we always like to give greater weight to the saturation value, and by assuming it exactly right we may if we please suppose some fall in $v-u$ as θ increases. It is, however, unfair to draw any conclusion of consequence.

At 5 atmospheres we have more constancy:—

θ° C.	152·3	160	200	205
$v-u$	·36	·282	·324	·323

On the whole, therefore, I am disposed to say that **the only conclusion deducible** from Hirn's inconsistent and unreliable experiments is that there may be such a law as

$$u = \frac{Rt}{p} - f(p) \quad . \quad . \quad . \quad . \quad (1)$$

taking the form and value of $f(p)$ from the more accurately known numbers of Rankine for saturated steam. I find then that the information at our command at present gives for steam, whether in the saturated or superheated condition,

$$u = \frac{Rt}{p} - \left(0{\cdot}118 + \frac{3200}{p + 3350}\right) \quad . \quad . \quad . \quad . \quad (2)$$

Where $R = 153{\cdot}8, t = \theta^\circ$ C. $+ 273{\cdot}7$, p is pressure in pounds per square foot.[1]

I will now calculate u for a few cases. Note that in the superheated cases I have chosen those which are most likely to be most in disagreement with observation.

SATURATED STEAM.

θ	p	Accepted u	Now calculated u	Percentage difference
0°C.	12·27	3398	3434	+1·9
10	24·92	1736	1751	− ·8
40	152·6	313·6	315·4	− ·6
60	414·3	122·3	123·0	− ·6
80	987·6	54·06	54·27	− ·4
100	2116·4	26·43	26·48	− ·2
120	4152	14·04	14·06	− ·2
140	7563	7·995	8·007	− ·7
160	12940	4·827	4·843	− ·3
180	20990	3·065	3·078	− ·4
200	32520	2·031	2·035	− ·2

SUPERHEATED STEAM.

		Hirn's u		
141	2116	29·64	29·46	+1½
200	2116	33·32	33·74	−1·3
205	2116	34·28	34·10	+ ·6
246·5	2116	36·66	37·08	−1·6
200	4762	14·73	14·80	− ·5
200	6349	11·165	11·03	+1·2
201	7407	9·668	9·44	+2·4
246·5	8465	9·214	9·06	+1·7
160	10582	6·020	5·96	+1·0

[1] It is easy to find a better formula than the above, if one wishes only to express the properties of *saturated* steam. If $v = \frac{Rt}{p}$ as before, and if we plot log. $\left(\frac{v - u}{v}\right)$ and log. p on squared paper, the points lie very closely in a straight line from pressures of one-fifteenth of an atmosphere to fourteen atmospheres, and my students have deduced the law

$$u = \frac{Rt}{p} - {\cdot}0113\, tp^{-0{\cdot}53}$$

372. Our anxiety on this subject is not so much to obtain an empirical formula, as to find the specific heat K of superheated steam. One use to which we put K is described in Art. 207, and it evidently is of considerable pecuniary importance. Thus, when we specify for plant for an electric lighting station, we commonly say "there must be one electrical unit produced (about $1\frac{1}{3}$ horse-power hours) for 21 lbs. of steam of 165 lbs. pressure." Now everything depends upon the wetness of the steam supplied, for the engine builder does not usually supply the boiler, and the easy way of finding the wetness depends upon our being able to use a value of K in our calculation. See the other methods described in Art. 207.

The engine builder tests the engine at his own works by taking the steam through a reducing valve from a boiler at 215 lbs. pressure (if the cylinder is to be fed at 165 or less), so that he may be pretty certain of its dryness. Indeed, he is not likely to suffer because of having wet steam, for he knows how to object to what he considers an unfair test. I do not know if anybody ever tests whether the steam taken through such a reducing valve is not too dry, superheated in fact, a test excessively easy to apply.

The Specific Heat of Superheated Steam. As a matter of fact, we may say that Hirn's numbers do not help us to any better assumption than the use of $u = \frac{Rt}{p}$ in calculating $\left(\frac{du}{dt}\right)_p$ and $\left(\frac{dp}{dt}\right)_u$, or the assumptions that both k and K are functions of temperature only.

In Art. 363 I have found 0·305 to be the specific heat of superheated steam at 0° C., assuming Regnault's results to be correct. In the same sort of way we can find what is probably its specific heat in other conditions.

If ϕ is the entropy of a pound of dry saturated steam it will be found sufficiently accurate for almost all purposes to take

$$\phi = \log_e \frac{t}{273{\cdot}7} + \frac{797}{t} - 0{\cdot}695$$

This is deduced from taking Regnault's total heat as

$$H = 606{\cdot}5 + {\cdot}305\theta \text{ ; or}$$

$$H = 523 \quad + {\cdot}305t \text{ if } t = \theta° \text{ C.} + 273{\cdot}7$$

and assuming that the latent heat is

$$L = H - \theta$$

so that we assume the specific heat of water to be constant.

But if we wish to be more accurate; if σ is the specific heat of water, $L = H - \int_{273}^{t} \sigma . dt$

Now I prefer to use the formula of Rankine for σ; it most probably agrees with Regnault's units, where $J = 1393$ or 774. Converting into Centigrade

$$\sigma = 1 \times 10^{-6}\theta^2 \text{ (or more exactly } 1 + 10^{-6}(\theta - 4)^2)$$

From this I find ϕ, and also

$$\frac{d\phi}{dt} = \frac{1}{t} - \frac{797}{t^2} + \frac{10^{-6}}{3}\frac{(t - 278)^3}{t^2} \quad . \quad . \quad . \quad (1)$$

for steam which just keeps saturated.

But in superheated steam whose characteristic is

$$u = \frac{Rt}{p} - f \quad . \quad . \quad . \quad . \quad . \quad . \quad . \quad (2)$$

where f is some function of pressure and temperature, we see from Art. 361 that

$$d\phi = \frac{dH}{t} = \frac{K}{t}dt - \left(\frac{du}{dt}\right)_p dp$$

for any change of state. Now let us suppose the superheated steam to keep infinitely near to saturation, so that $\frac{dp}{dt}$ is defined. Then

$$\frac{d\phi}{dt} = \frac{K}{t} - \left(\frac{du}{dt}\right)_p \left(\frac{dp}{dt}\right)_{sat} \quad . \quad . \quad . \quad . \quad . \quad (3)$$

Putting (3) and (1) equal to one another, and neglecting the small term, we find

$$K = 1 - \frac{797}{t} + t\left(\frac{du}{dt}\right)_p \left(\frac{dp}{dt}\right)_{sat} \quad . \quad . \quad . \quad (4)$$

Taking $u = \frac{Rt}{p} - f$ where f is a function of p only, $\left(\frac{du}{dt}\right)_p = \frac{R}{p}$ and hence

$$K = 1 - \frac{797}{t} + \frac{1}{J}\frac{Rt}{p}\left(\frac{dp}{dt}\right)_{sat} \quad . \quad . \quad . \quad . \quad (5)$$

Thus calculating we have the following results.

The value of K for 0° C. may no doubt be obtained from this

formula if we can find $\frac{dp}{dt}$, but I prefer to take it as worked out in Art. 363.

0° C.	t	p	$\left(\frac{dp}{dt}\right)_{sat}$	K
0 C.	—	—	—	·305
40	314	152·6	8·176	·317
70	344	649·4	28·03	·322
100	374	2116·4	75·52	·341
130	404	5652	169·6	·366
160	434	12940	330·3	·385
190	464	26270	573·8	·400
210	484	39870	830	·464

There can be no doubt that these values for K must be very nearly **correct near saturation** if Regnault's results are right. If we were only sure that (1) of Art. 370 were true, that is, that K is a function of temperature only, we might use the tabulated values just given for K, not merely near saturation, but under all circumstances. I have already pointed out that Hirn's numbers are too incorrect to enable us to make any more exact assumption than (2) where f sometimes increased with temperature and sometimes diminished, but in such an erratic way that we might assume f a function of pressure only, just as fairly as anything else.

It seems to me now for the following reason that this must really be the case; that f is, with some truth, merely a function of the pressure. Regnault's usually accepted value of K or 0·48 is the average value between 224° C. and 125° C. at atmospheric pressure; yet it is not very different from the average value between the same temperatures of the table, although the tabulated values are for steam near saturation and at very great pressures.

Again, Mr. Macfarlane Gray obtained 0·38 as the average—from Regnault's experiments—between 100° C. and 125° C., and this is not very different from the tabulated value.

Until some fresh experimental evidence is before us, I am therefore disposed to accept the three numbers deduced from Regnault as being fairly correct, and to assume that K is a function of the temperature. According to this notion the specific heat of superheated steam is

$$K = 0{\cdot}305 + 5{\cdot}75 \times 10^{-6}\theta^2$$

where θ is the temperature Centigrade. See Note, Art. 187.

Mathematical Exercise for Students.—Assume that $K = \frac{a + b\theta^2}{1 + \beta\theta^2}$ Find a, b and β, so that $K = \cdot 305$ when $\theta = 0$, and that the average value of K between $\theta = 100$ and $\theta = 125$ is 0·38, and the average value of K between 125 and 225 is 0·48.

373. EXERCISE. If superheated steam follows the law

$$u = \frac{Rt}{p} - 2{\cdot}1\, p^{-0{\cdot}44}$$

and if K is a known function of the temperature, what are the t, ϕ curves for constant pressure?

Answer. $d\phi = \frac{K}{t}\, dt$ or $\phi = \int \frac{K}{t} dt$.

Thus if we take $K = \cdot 305 + 5{\cdot}75 \times 10^{-6}(t - 274)^2$

$$\phi = \cdot 737 \log. \frac{t}{274} + 2{\cdot}875 \times 10^{-6}(t^2 - 1096\, t) + 0{\cdot}648.$$

It is to be noticed that in Art. 205 I assumed that superheated steam is a perfect gas, and furthermore that its specific heat K is always 0·48. To draw the real $t\phi$ curves for constant pressure and volume would be more troublesome, and even when one has studied most carefully all the existing information, one has no great inclination to draw the curves even on the fresh information which I have given. In Art. 214 it will be seen that we greatly need correct figures to determine the weight of superheated steam used per hour per horse-power.

374. EXERCISE. Assume that for superheated steam

$$p = \frac{Rt}{u} - F,$$

where F is a function of u the volume only: as k is a function of temperature only, see (19) of Art. 361, find it for various temperatures.

It is easy to show, as in the other case, that under nearly saturated conditions

$$k = 1 - \frac{797}{t} - t\left(\frac{dp}{dt}\right)_u \left(\frac{du}{dt}\right)_{sat} \quad \ldots\ldots (1)$$

$$k = 1 - \frac{797}{t} - \frac{Rt}{Ju}\left(\frac{du}{dt}\right)_{sat} \quad \ldots\ldots (2)$$

The following table of the values of $\frac{du}{dt}$ at saturation has been

calculated by Mr. D. Baxandall. The values of u given, are Rankine's $\times \frac{774}{772}$, and t is $\theta°$ C. + 274, R is 153·8.

$\theta°$ C.	t	u	$\left(\frac{du}{dt}\right)_{sat}$	k
20	294	937	- 55·25	·201
60	334	122·3	- 5·351	·226
100	374	26·43	- 0·89	·258
140	414	7·995	- 0·2133	·293
180	454	3·065	- 0·0663	·327
210	484	1·676	- 0·0314	·353

My attention has recently been drawn to the values of v, p and t given by Professors Ramsay and Young in the *Phil. Trans.* 1892. These are evidently much more consistent with one another than those obtained by Hirn, but I find that they would not modify my conclusions because of their discontinuity with the calculated saturated volumes obtained by calculation, and it is close to saturation that I desire to know the properties of superheated steam. Also these gentlemen have not published the actual numbers obtained by them in experiment, but only those numbers "smoothed" on some system which is unknown to me. Smoothed on another system they would probably be different.

CHAPTER XXXIII.

HOW FLUIDS GIVE UP HEAT AND MOMENTUM.

375. THERE are two phenomena which we can understand only through our knowledge of diffusion in fluids:—

I. When a portion of a fluid has a greater temperature than the rest; how the **temperature** is equalised, that is, how it shares the average kinetic energy of its molecules with other portions of the fluid, and how it gives it up to the molecules of a solid body which it touches.

II. When a portion of fluid has, besides its molecular motion of agitation which is the same in all directions, a motion of its centre of gravity relatively to the rest of the fluid; that is, it has on the whole momentum in a particular direction; how it shares this **momentum** with the rest of the fluid, and especially how it gives up momentum to the molecules of a solid body which it touches.

I take it that these cases are identical, that the equalisation is by diffusion; that it proceeds very slowly indeed, at a rate which may be judged of in the following way:—

Its rate in water.—Get a large glass vessel of clear water; at a point A let there be the end of a fixed tube, by means of which, with very little commotion, we may colour a small region in the water. If the water has no currents in it, at what rate will the coloured particles diffuse from A through the whole mass? To be quite sure of freedom from currents, it is best to use a long, thin, vertical tube as our vessel. The diffusion is exceedingly slow compared with such equalisations of colour density as we are accustomed to in masses of water.

The molecular theory tells us what this rate is in gases. It is really slow, but it is practically impossible to test the theory by experimentally colouring some of the gas in a vessel.

But when there is such a motion that a portion of fluid A gets

sandwiched out between other portions B, so that parts of A are everywhere close to parts of B, there is no change in the actual rate of molecular diffusion anywhere, but the diffusion is between the neighbouring parts of A and parts of B, and of course there is a rapid equalisation of properties.

If the peculiar property of A is *colour*, colour is equalised.

If the property of A is higher *temperature*, then temperature is equalised.

But in any case the mixing would be exceedingly slow except for the agency of unstable stream line motion which causes portions moving with very different velocities to become sandwiched, that is to come near together, so that diffusion may produce large effects. Now the rapid mixing cannot occur unless there are sandwiched streams, and diffusion is constantly equalising the velocities of the stream lines, and this is what we call friction; hence these three things seem to go together:—

1. Actual mixing of portions of the fluid.
2. Equalisation of temperature.
3. Friction.

376. In my 1873 edition I pointed out the importance of artificial obstructions in **the flues of boilers,** and when speaking to students I have persistently dwelt since then upon the apparent fact that anything which increases the friction of flue gases against the metal surface increases the rate of transmission of heat, but I must confess that I had no exact notions on the subject until, in 1897, Mr. Stanton, a pupil of Professor Osborne Reynolds, read the abstract of a paper before the Royal Society, published later in full in the *Philosophical Transactions.*

He forced water at two different temperatures through two concentric pipes, one surrounding the other, and showed that at quite different speeds the change of temperature produced in a given length of pipe was pretty much the same; that is, that twice as much heat passed when the speeds were twice as great. I at once put the matter in the following shape. My theory is very incomplete, but it is not at all bad to think about, and I think that it cannot differ greatly from that of Reynolds, which, to my great astonishment, I read a little about to-day [April, 1898] for the first time, in a short but most suggestive paper published in 1874 before the Manchester Literary and Philosophical Society. I found it referred to in the paper of Mr. Stanton, and I think that I may have heard of it before but mixed it up with a much more

elaborate mathematical paper by Professor Reynolds (*Phil. Trans.*, 1894).[1]

I feel that to publish this old and neglected paper here will be doing a service to all students, and I have asked for permission to publish it as an appendix. At the same time I think that the following rough theory, which I worked out after hearing Mr. Stanton's paper, will be welcome.

377. When fluid is in motion filling a pipe we know that there is a thin film or layer of fluid entangled among the molecules of the solid surface which is at rest, that is, it has no average velocity relatively to the solid. Let us consider how heat gets into this film from the moving fluid. It is difficult to say whether one ought or ought not to take entrance of heat to this layer of motionless fluid as entrance to the metal itself. There is equalisation of the momentum, and there may be equalisation of the temperature.

Now suppose n molecules per second to enter this layer and the same number to leave it; each of them enters with an average kinetic energy proportional to t the average temperature (absolute) in the pipe, and leaves with t^1 the temperature of the layer, and an average momentum in the axial direction proportional to v if v is the average axial velocity in the pipe. There is a want of exactness in my definition of these averages, which is, I think, the only weakness in this investigation. Now axially directed momentum given to the layer per second is what we mean by force of friction F.

$$\text{So that per unit area } F \propto nv \quad . \quad . \quad . \quad . \quad (1)$$

And the heat H or kinetic energy per second per unit area

$$H \propto n(t-t^1). \quad . \quad . \quad . \quad . \quad . \quad . \quad . \quad (2)$$

$$\text{Hence} \qquad H \propto F(t-t^1)/v \quad . \quad . \quad . \quad . \quad . \quad . \quad . \quad (3)$$

Of course when v is 0 we cannot use (1) in (2) to find (3), but we shall only use our equations in cases where v has some value.

In the standard books on friction of fluids in pipes, the law is given

$$F \propto w v^2 \quad . \quad . \quad . \quad . \quad . \quad . \quad . \quad (4)$$

where w is the weight of the fluid per unit volume, and v is the

[1] I believe that when I study the 1894 paper and other papers of Professor Reynolds, I shall write on this and many other subjects with certainty and clearness, but I have not yet found the necessary time. I know that the Manchester students have clear and correct notions on many subjects about which other students are ignorant.

average axial velocity in the channel. I am informed by Prof. O. Reynolds that the results of his 1883 paper in the *Philosophical Transactions* are applicable to gases, and taking his index there as 2 we have the same formulæ as (4); (3) and (4) give us

$$H = c' wv(t - t^1) \quad . \quad . \quad . \quad . \quad . \quad . \quad (5)$$

where c' is a constant. If instead of the conductivity of the layer or film at the surface being infinitely great, one side of the film is at t'' and the other at t', and if b is its thickness and k its conductivity for heat, we get the equivalent of (5) from

$$(t' - t'')\frac{k}{b} = c' wv(t - t')$$

this gives

$$H \propto \frac{c' wv(t - t'')}{1 + c' wv\frac{b}{k}} \quad . \quad . \quad . \quad . \quad . \quad . \quad . \quad (6)$$

We see therefore that in using, as we shall do, (5) instead of the more correct (6) we shall be assuming c' a constant, whereas it really depends upon the value of $wv\frac{b}{k}$. It is possible that b diminishes as v increases, so that vb may be nearly constant; but w is inversely as the absolute temperature and k is probably proportional to the square of the absolute temperature. We shall proceed, therefore, using (5) and assuming c' to be constant, but in the applications of our results we shall remember that c' increases as the temperature increases.

We shall say then that the **heat resistance** per unit area between a fluid and a metal plate is inversely proportional to wv.

378. Let us consider two channels conveying fluids to be separated by a metal plate and to be conveying W and W_3 lb. of fluid per second, of weights w and w_3 lb. per unit volume; the cross sections being A and A_3; the lengths of the perimeters of these cross sections which are in the metal plate are P and P_3. The velocities being v and v_3 and the average temperatures t and T, $wv = W/A$, $w_3 v_3 = W_3/A_3$.

I shall therefore use as the three resistances per unit area,

$$\frac{r}{wv}, R_2 \text{ and } \frac{r_3}{w_3 v_3}$$

where r, R_2 and r_3 are constants, R_2 being the thickness divided by the conductivity of the metal, or

$$r\frac{A}{W}, R_2 \text{ and } r_3\frac{A}{W_3}$$

Hence, per unit area, the heat per second passing through is

$$H = \frac{t-T}{r\frac{A}{W} + R_2 + r_3\frac{W_3}{A_3}} \quad . \quad . \qquad (1)$$

or

$$H = \frac{\frac{W}{A}(t-T)}{r + R_2\frac{W}{A} + r_3\frac{A_3}{W_3}\frac{W}{A}} \qquad (2)$$

I shall take it that the two fluids move in opposite directions and as if in concentric pipes, and write (1) in the short form

$$H = c(t-T) \quad . \quad . \quad . \quad . \quad . \quad . \quad (1)$$

At a distance x from one end of the wall in the direction of motion of the hotter fluid if we take P as the common touched perimeter, the one fluid gives up and the other receives at the elementary area $P.\delta x$ the heat $P.\delta x.c(t-T)$ per second, and in the same time we have the loss $-WK.dt$ and the gain $-W_3K_3.dT$.

$$-WKdt = P.dx.c(t-T) = -W_3.K_3.dT \quad . \quad (2)$$

Hence

$$T = \frac{WK}{W_3K_3}t + \text{constant}$$

and

$$t - T = \left(1 - \frac{WK}{W_3K_3}\right)t - C$$

When

$$x = o,\ t = t_1,\ T = T_1$$

$$x = l,\ t = t_2,\ T = T_2$$

$$C = T_2 - \frac{WK}{W_3K_3}t_2$$

$$t - T = \left(1 - \frac{WK}{W_3K_3}\right)t - \left(T_2 - \frac{WK}{W_3K_3}t_2\right). \quad . \qquad (3)$$

Now (2) tells us that

$$\frac{dt}{dx} = -\frac{Pc}{WK}(t-T)$$

Let

$$\frac{Pc}{WK}\left(1 - \frac{WK}{W_3K_3}\right) \text{ be called } a,$$

Let

$$\frac{T_2 - \frac{WK}{W_3K_3}t_2}{1 - \frac{WK}{W_3K}} \text{ or } \frac{W_3K_3T_2 - WKt_2}{W_3K_3 - WK} \text{ be called } b$$

$$\text{then} \quad \frac{dt}{dx} = -a(t-b)$$

$$\log.(t-b) = -ax + \text{const.}$$

Now $t = t_1$ when $x = o$ so that

$$t = b + (t_1 - b)e^{-ax} \quad . \quad . \quad . \quad . \quad . \quad (4)$$

Let **the efficiency** E be defined as $\frac{t_1 - t_2}{t_1 - T_2}$

$$\text{then } E = \frac{t_1 - b}{t_1 - T_2}(1 - e^{-al})$$

379. Approximation. Let us assume that $T_1 = T_2 = T$. This is nearly true in boilers. Then as

$$-\frac{dt}{dx} = \frac{Pc}{WK}(t - T)$$

$$\log.(t - T) = -\frac{Pc}{WK}x$$

$$t - T = (t_1 - T)e^{-\frac{Pc}{WK}x}$$

$$E = \frac{t_1 - t_2}{t_1 - T} = 1 - e^{-\frac{Pc}{WK}l}$$

The efficiency depends therefore upon the value of

$$\frac{Pcl}{WK} \text{ or } \frac{Pl/KA}{r + r_2\frac{W}{A} + r_3\frac{A_3}{W_3}\frac{W}{A}}$$

or neglecting the term in r_2 and leaving out K, the efficiency depends upon

$$l \div \left(r\frac{A}{P} + r_3\frac{A_3}{W_3}W\frac{1}{P}\right)$$

If $\frac{A}{P}$ and $\frac{A_3}{P}$ be called m and m_3, the hydraulic mean depths, we see that the efficiency depends upon

$$l \div \left(rm + r_3 m_3 \frac{W}{W_3}\right)$$

The term $r_3 m_3 \frac{W}{W_3}$ gets less as there is better and better circulation of water; it is, in fact, inversely proportional to the velocity of the water close to the metal. It is to be noticed that this rapid circulation of the water is as necessary for efficiency as the rapid

circulation of the gases in the flue. Neglecting this term, or assuming that the water circulates so fast as to keep the metal practically at the temperature of the water, the efficiency would depend only upon l/m, the length of the flue divided by its hydraulic mean depth, and would be practically independent of the quantity of gases flowing, being $E = 1 - \epsilon^{-cl/m}$ where c is a constant. The following expression will be found to be practically the same as this, and it is easier to deal with;

$$E = 1/(1 + cm/l)$$

where c is a constant. Indeed, in a well constructed boiler the **mere area of the heating surface** ought to be of but slight importance. If in any class of boiler the efficiency depends upon mere area of heating surface, we have a proof of bad circulation of the water; a proof that the carrying off of heat by the water from the metal has not been attended to. It seems to me that when a **good scrubbing action** is established on both sides of the metal, there ought to be at least ten times, and may be more than 100 times as rapid an evaporation per square foot of heating surface as has yet been obtained in any boiler. In existing boilers the resistance of the metal itself is insignificant, as the following exercises will show. As better and better circulation is provided on both sides of the metal, it seems to me that the total resistance must approximate more and more to that of the metal itself.[1]

380. Heat Resistance of a Metal Plate.—The following exercises illustrate the insignificance of the metal plate resistance to the passage of heat in existing boiler flues and surface condensers.

[1] The above investigation shows that the **following simple way** of putting the whole matter is legitimate within certain limits of velocity, &c.

Assume the temperature T of the water to be constant. Let $t - T$ be called θ, t being the absolute temperature of the gases at the distance x from the furnace end of a tube of total length l and diameter d. Let W lb. of gases flow through the tube per second, the specific heat being constant.

Take our law as given in (5), Art. 377, to be that the loss of heat per second per unit area of tube is proportional to

$$v\theta/t \text{ or } W\theta/d^2$$

where v is the velocity, for v is proportional to $W t/d^2$. Hence in the short length δx

$$-W \cdot \delta\theta = cW\theta \cdot \delta x/d$$

where c is a constant. Solving this and taking $\theta = \theta_1$ at the furnace end and $\theta = \theta_2$ at the smoke box end, we have

$$\theta = \theta_1 e^{-cx/d} \text{ and } \theta_2 = \theta_1 e^{-cl/d}$$

and **the efficiency** is

$$E = 1 - e^{-cl/d}$$

In *CGS* units; the heat (in gramme of water degree units) Q which flows in t seconds between two parallel surfaces, A square cm. in area x cm. apart, the temperature difference being θ is

$$Q = \frac{A}{x} k t \theta$$

Where k is the conductivity of the material. k is probably proportional to the absolute temperature of metals. In the following table I give the Conductivities which are assumed to be correct in academic problems. Only the iron and trachyte are probably nearly correct, k^1 is $k \div 454$.

Substance.	Conductivity.	k^1 of formula.
Steel	·06 to ·1	$1{\cdot}4 \times 10^{-4}$ to $2{\cdot}2 \times 10^{-4}$
Iron	·160 to ·2	$3{\cdot}5 \times 10^{-4}$ to $4{\cdot}4 + 10^{-4}$
Copper	1·108 to 0·7	24×10^{-4} to 15×10^{-4}
Brass	0·2 to ·3	$4{\cdot}4 \times 10^{-4}$ to $6{\cdot}6 \times 10^{-4}$
Trachyte	·006	$1{\cdot}3 \times 10^{-5}$
Fire-brick	·0017	$3{\cdot}7 \times 10^{-6}$
Plate glass	·002	$4{\cdot}4 \times 10^{-6}$
Oak	·0006	$1{\cdot}3 \times 10^{-6}$

Mr. Callendar's latest numbers are $k = {\cdot}11$ for iron, ·12 for steel.

Now our unit of heat is in pound of water degree units and therefore if Q^1 is in these units; if A is area in square cm., x thickness in cm., and k^1 is the number in the table; then we have

$$Q^1 = \frac{A}{x} k^1 t \theta$$

If θ is in Fahrenheit or Centigrade degrees, Q^1 is in Fahrenheit or Centigrade pound of water units.

I often call $x \div Ak^1$ the heat *resistance* R of the metal and then

$$Q^1 \text{ per second} = \theta \div R$$

EXERCISE. Find the resistance in our units of a copper plate 1 foot square $\frac{1}{2}$ inch thick.

Answer. As x is $\frac{1}{2}$ inch or 1·27 cm., and as A is 1 square foot or 929 square cm., if we take k^1 from the table as 24×10^{-4} for copper $R = 1{\cdot}27 \div (929 \times 24 \times 10^{-4}) = 0{\cdot}57$.

EXERCISE. If 1·54 centigrade pound units of heat pass through the above square foot of copper per second, what must be the actual temperature difference θ in the metal?

Heat per second $= \frac{\theta}{R}$ so that $\theta = 1{\cdot}54 \times 0{\cdot}57 = 0{\cdot}88$ Centigrade degrees.

EXERCISE. Probably no boiler produces more than 9 lbs. of steam per hour per square foot of metal. Take a plate of copper $\frac{1}{2}$ inch thick. Take the average temperature difference between gases and water as 750 Centigrade degrees. Take the heat per lb. of steam as 620 units, what is the total heat resistance per square foot?

Answer. 750 divided by $\frac{9 \times 620}{60 \times 60}$, or by 1·54 units per second, gives a resistance 487 in foot second pound of water units.

Now we saw that a plate of copper 1 square foot (929 square cm.) in area, $\frac{1}{2}$ inch (1·27 cm.) thick, has a resistance of only 0·57. Hence **the total resistance** is nearly 1,000 times that of the plate itself; in fact the plate resistance may be neglected in comparison with the skin resistance even in boilers in which the skin resistances are exceptionally small. The actual thickness of the metal is obviously of very small importance therefore in flues.

EXERCISE. If we have 2 square feet of surface in a **surface condenser** per indicated horse-power, and if this means the condensation of 15·4 lbs. of steam per hour per indicated horse-power, its temperature being 135° F., the temperature of the water being 70° F.; what is the total heat resistance? The tubes are of brass $\frac{1}{20}$th of an inch thick; compare the resistance of the metal with the whole. Take it that 1 lb. of steam gives out 950 Fahr. pound units in condensing.[1]

Answer. The heat per second per square foot is 15·4 × 950 ÷ 2 × 60 × 60, or 2·03 Fahr. units. Total resistance per square foot of surface $= \frac{135 - 70}{2 \cdot 03}$ or 32. The resistance of a square foot (929 square cm.), $\frac{1}{20}$th of an inch (·127 cm.) thick is, taking $k^1 = 5 \times 10^{-4}$ from the table.

$$\cdot 127 \div (929 \times 5 \times 10^{-4}) \text{ or } 0 \cdot 273$$

so that the whole resistance is 118 times that of the metal itself.

[1] Mr. Callendar has recently obtained condensation at the rate of 1·07 Fahr. heat units per second per square foot of metal per degree difference of temperature between steam and metal, or, for an actual temperature difference of 22 degrees Fahr., he had 89 lbs. per hour per square foot. This would mean that 1 square foot would suffice for about 6 horse-power. I believe that with steam more and more free from air he would have obtained better and better results. We have no right to assume that the rapidity is proportional to temperature difference between water and steam; but if we might do so we should find more than 22 times the above rate of transmission, and the whole heat resistance would only be 5 times that of the metal. This gives one of the best illustrations of what **a great improvement** will be effected **in condensers** when the water is driven through very fine tubes at great velocity.

EXERCISE. An oak board 1 inch thick touched a plate of iron all over one face; its other face was exposed to the atmosphere of a room in which the temperature was 80° F. There was steam at 300° F. underneath the iron plate. The heat coming through into the room per square foot of surface was found to be 300 Fahr. units per hour, compare the resistance of the oak itself with the whole resistance.

The heat is $300 \div (60 \times 60)$ or ·0835 units per second $\frac{300-80}{\cdot 0835}$ or 2640 is the resistance.

Now the resistance of 1 square foot of oak 1″ thick is $2{\cdot}54 \div (929 \times 1{\cdot}3 \times 10^{-6})$ or 2100, so that the oak resistance is 80 per cent. of the whole. I am afraid, however, that neither the number in the table nor the above number can be relied upon, and this exercise creates a quite wrong notion of the accuracy of k as given in the table.

APPENDIX.

Reprinted from the Proceedings of the Literary and Philosophical Society of Manchester, 1874.

"On the Extent and Action of the Heating Surface for Steam Boilers," by Professor Osborne Reynolds, M.A.

The rapidity with which heat will pass from one fluid to another through an intervening plate of metal is a matter of such practical importance that I need not apologise for introducing it here. Besides its practical value it also forms a subject of very great philosophical interest, being intimately connected with, if it does not form part of, molecular philosophy.

In addition to the great amount of empirical and practical knowledge which has been acquired from steam-boilers, the transmissiou of heat has been made the subject of direct inquiry by Newton, Dulong and Petit, Péclet, Joule, and Rankine, and considerable efforts have been made to reduce it to a system. But as yet the advance in this direction has not been very great; and the discrepancy in the results of the various experiments is such that one cannot avoid the conclusion that the circumstances of the problem have not been all taken into account.

Newton appears to have assumed that the rate at which heat is transmitted from a surface to a gas and *vice versâ* is *ceteris paribus* directly proportional to the difference in temperature between the surface and the gas, whereas Dulong and Petit, followed by Péclet, came to the conclusion from their experiments that it followed altogether a different law.[1]

These philosophers do not seem to have advanced any theoretical reasons for the law which they have taken, but have deduced it entirely from their experiments, "à chercher par tâtonnement la loi que suivent ces résultats."[2]

[1] *Traité de la Chaleur*, Péclet, Vol. I., p. 365.

[2] *Ib.* p. 363.

In reducing these results, however, so many things had to be taken into account and so many assumptions have been made that it can hardly be a matter of surprise if they have been misled. And there is one assumption which upon the face of it seems to be contrary to general experience, this is, that the quantity of heat imparted by a given extent of surface to the adjacent fluid is independent of the motion of that fluid or of the nature of the surface ;[1] whereas the cooling effect of a wind compared with still air is so evident that it must cast doubt upon the truth of any hypothesis which does not take it into account.

In this paper I approach the problem in another manner from that in which it has been approached before. Starting with the laws recently discovered of the internal diffusion of fluids I have endeavoured to deduce from theoretical considerations the laws for the transmission of heat, and then verify these laws by experiment. In the latter respect I can only offer a few preliminary results ; which, however, seem to agree so well with general experience, as to warrant a further investigation of the subject, to promote which is my object in bringing it forward in the present incomplete form.

The heat carried off by air or any fluid from a surface, apart from the effect of radiation, is proportional to the internal diffusion of the fluid at and near the surface, *i.e.*, is proportional to the rate at which particles or molecules pass backwards and forwards from the surface to any given depth within the fluid, thus, if AB be the surface and ab an ideal line in the fluid parallel to AB, then the heat carried off from the surface in a given time will be proportional to the number of molecules which in that time pass from ab to AB—that is for a given difference of temperature between the fluid and the surface.

This assumption is fundamental to what I have to say, and is based on the molecular theory of fluids.

Now the rate of this diffusion has been shown from various considerations to depend on two things :—

1. The natural internal diffusion of the fluid when at rest.

2. The eddies caused by visible motion which mixes the fluid up and continually brings fresh particles into contact with the surface.

The first of these causes is independent of the velocity of the fluid, if it be a gas is independent of its density, so that it may be said to depend only on the nature of the fluid.[2]

The second cause, the effect of eddies, arises entirely from the motion of the fluid, and is proportional both to the density of the fluid, if gas, and the velocity with which it flows past the surface.

The combined effect of these two causes may be expressed in a formula as follows :

$$H = At + B\rho v t, \qquad \text{(I)}$$

where t is the difference of temperature between the surface and the fluid, ρ is the density of the fluid, v its velocity, and A and B constants depending on the nature of the fluid, H being the heat transmitted per unit of surface of the surface in a unit of time.

If therefore a fluid were forced along a fixed length of pipe which was maintained at a uniform temperature greater or less than the initial temperature of the gas we should expect the following results.

1. Starting with a velocity zero, the gas would then acquire the same temperature as the tube. 2. As the velocity increased the temperature at which the gas would emerge would gradually diminish, rapidly at first, but in a

[1] *Traité de la Chaleur*, Péclet, Vol. I., p. 383.

[2] Maxwell's *Theory of Heat*, chap. xix.

decreasing ratio until it would become sensibly constant and independent of the velocity. The velocity after which the temperature of the emerging gas would be sensibly constant can only be found for each particular gas by experiment: but it would seem reasonable to suppose that it would be the same as that at which the resistance offered by friction to the motion of the fluid would be sensibly proportional to the square of the velocity. It having been found both theoretically and by experiment that this resistance is connected with the diffusion of the gas by a formula:

$$R = A^1 v + B^1 \rho v^2 \qquad \text{(II)}$$

And various considerations lead to the supposition that A and B in (I) are proportional to A^1 and B^1 in (II). The value of v which this gives is very small, and hence it follows that for considerable velocities the gas should emerge from the tube at a nearly constant temperature whatever may be its velocity.

This, as I am about to point out, is in accordance with what has been observed in tubular boilers as well as in more definite experiments.

In the locomotive the length of the boiler is limited by the length of tube necessary to cool the air from the fire down to a certain temperature say 500°. Now there does not seem to be any general rule in practice for determining this length, the length varying from 16 ft. to as little as 6, but whatever the proportions may be each engine furnishes a means of comparing the efficiency of the tubes for high and low velocities of the air through them. It has been a matter of surprise how completely the steam-producing power of a boiler appears to rise with the strength of blast or the work required from it. And as the boilers are as economical when working with a high blast as with a low, the air going up the chimney cannot have a much higher temperature in the one case than in the other. That it should be somewhat higher is strictly in accordance with the theory as stated above.

It must, however, be noticed that the foregoing conclusion is based on the assumption that the surface of the tube is kept at the same constant temperature, a condition which it is easy to see can hardly be fulfilled in practice.

The method by which this is usually attempted is by surrounding the tube on the outside with some fluid the temperature of which is kept constant by some natural means, such as boiling or freezing, for instance the tube is surrounded with boiling water. Now although it may be possible to keep the water at a constant temperature it does not at all follow that the tube will be kept at the same temperature; but on the other hand, since heat has to pass from the water to the tube there must be a difference of temperature between them, and this difference will be proportional to the quantity of heat which has to pass. And again the heat will have to pass through the material of the tube, and the rate at which it will do this will depend on the difference of the temperatures at its two surfaces. Hence if air be forced through a tube surrounded with boiling water, the temperature of the inner surface of the tube will not be constant but will diminish with the quantity of heat carried off by the air. It may be imagined that the difference will not be great: a variety of experiments lead me to suppose that it is much greater than is generally supposed. It is obvious that if the previous conclusions be correct this difference would be diminished by keeping the water in motion, and the more rapid the motion the less would be the difference. Taking these things into consideration the following experiments may, I think, be looked upon, if not as conclusive evidence of the truth of the above reasoning yet as bearing directly upon it.

One end of a brass tube was connected with a reservoir of compressed air.

the tube itself was immersed in boiling water, and the other end was connected with a small non-conducting chamber formed of concentric cylinders of paper with intervals between them in which was inserted the bulb of a thermometer. The air was then allowed to pass through the tube and paper chamber, the pressure in the reservoir being maintained by bellows and measured by a mercury gauge: the thermometer then indicated the temperature of the emerging air. One experiment gave the following results:—With the smallest possible pressure the thermometer rose to 96° F., and as the pressure increased fell, until with $\frac{1}{16}$ inch it was 87°, with $\frac{1}{4}$ inch it was 70°, with 1 inch it was 64°, with 2 inches 60°; beyond this point the bellows would not raise the pressure.

It appears, therefore, (1) that the temperature of the air never rose to 212°, the temperature of the tube, even when moving slowest; but this difference was clearly accounted for by the loss of heat in the chamber from radiation, the small quantity of air passing through it not being sufficient to maintain the full temperature, an effect which must obviously vanish as the velocity of the air increased; (2) as the velocity increased the temperature diminished, at first rapidly and then in a more steady manner. The first diminution might be expected from the fact that the velocity was not as yet equal to that at which the resistance of friction is sensibly equal to the square of the velocity as previously explained. The steady diminution which continued when the velocity was greater was due to the cooling of the tube. This was proved to be the case, for at any stage of the operation the temperature of the emerging air could be slightly raised by increasing the heat under the water so as to make it boil faster and produce greater agitation in the water surrounding the tube. This experiment was repeated with several tubes of different lengths and characters, some of copper and some of brass, with practically the same results. I have not, however, as yet been able to complete the investigation, and I hope to be able before long to bring forward another communication before the Society.

I may state that should these conclusions be established, and the constant B for different fluids be determined, we should then be able to determine, as regards length and extent, the best proportion for the tubes and flues of boilers.

CHAPTER XXXIV.

JETS OF FLUID.

381. EVERY now and then during the last twenty years a student has asked for help in studying what will occur when a **jet of steam gives momentum** to a jet of water; his idea being to use the water in a turbine of some form, or, more directly still, in the propulsion of ships. This is a subject which is likely to become of great importance, and there is practically no help for the student in any of the books. Indeed, there is worse than no help. Mistakes are numerous in the best books on the flow of water; what must they be when the subject is the flow of a gas, and how absurd must the statements be on the flow of wet steam! I will not apologise for attempting to take up this subject in spite of the sense of my ignorance, because practical men feel the pressing need for some guidance, and there is what is much worse than no guidance in books at present. I shall assume that students know something about hydraulics. Not the misleading mixture of mathematical symbols and nonsense which is to be found in many books, but the common sense notions of the late **Professor James Thomson,** which really cover the whole ground of our knowledge. How do pressure and velocity alter along and across stream lines? the theory of the Thomson Jet Pump; what occurs near the frictional sides of a basin when water is flowing from it by a central hole at the bottom? the simple theory of the centrifugal pump and turbine. I have attempted in my book on Applied Mechanics, to give James Thomson's notions on these subjects. As to the way in which friction occurs in the passage of pumps, mathematical treatment of the subject is quite absurd in the present state of our knowledge; all we can do is to try to apply in a common sense fashion the general notions which the beautiful experiments of

Professor Osborne Reynolds have given us. I usually content myself with telling students how we get angles of vanes and velocities, so that fluid may leave one part of a contrivance and enter another moving with a different velocity, without shock; and how we ease off the sections of passages gradually so that there shall be small frictional loss of energy.

The rules for the steam turbine must, for the present, be the same as for the water turbine. The velocity of the rim of a wheel must be nearly equal to that which the fluid when flowing from one vessel to another would have at the orifice, if the pressure difference were half that between the supply and exhaust of the turbine; and hence it is that Mr. Parsons sends his steam through a series of such turbines, otherwise his velocities would be too great. See Art 389.

When a jet of fluid at very great velocity impinges on a jet of much greater mass, and they both go on together, there must be a great loss of energy. Fluids in passages are not altogether like colliding bodies in space, but the great general rule for such bodies must be borne in mind. When a moving body of mass M_1, and velocity V_1, strikes a body at rest of mass M_2, and they are found moving together afterwards, we know that the common velocity is $V = \frac{M_1 V_1}{M_1 + M_2}$ and

$$\frac{\text{lost energy}}{\text{remaining energy}} = \frac{M_2}{M_1},$$

so that the greater the stationary body the greater is the loss. Those inventors who wish to utilise a jet of steam in giving motion to water must bear this fact in mind. It does not necessarily mean that when we let a jet of steam give motion to water and allow the water to drive a turbine or exert propelling force, that the loss of energy will be exceedingly great compared with what occurs in a steam engine. Calculation and experiment may show that in spite of this loss of energy the efficiency of such a machine may compare favourably with that of a steam engine, and it may, besides, be more convenient in construction and application.

382. Until somebody makes a thorough experimental investigation, I do not see that we can make any accurate calculation except on the basis of the **following assumption.**

A B C D and *E F*, Fig. 319, are cross sections of a cylindric pipe. Normally to the portion *B C* of area a_1, there is a flow of fluid at the velocity v_1, the pressure there is p_1; normally to the rest (of area a_2)

of the section AD, there is a flow of fluid at the velocity v_2, and the pressure there is p_2.[1]

I shall neglect the action of gravity in the pipe, that is, difference of pressure due to difference of level. EF is a cross section of area $a = a_1 + a_2$, through which the velocity v is normal, the pressure being p. I assume that there is no friction at the boundaries of the

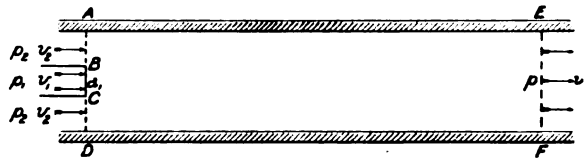

FIG. 319.

fluid, but there is sufficient friction in the fluid itself to cause the streams to get a common velocity at EF. Let w_1, w_2 and w, be the weight in pounds of a cubic foot of each fluid.

I. The quantity of fluid flowing in at AD is equal to what flows out at EF,

$$a_1 v_1 w_1 + a_2 v_2 w_2 = a v w, \text{ and } a_1 + a_2 = a \quad . \quad . \quad . \quad . \quad (1)$$

II. The momentum per second communicated at AD, minus that going out at EF, is equilibriated by the pressure forces.

The weight of water per second through a_1 is $v_1 a_1 w_1$, and its momentum is $\frac{w_1}{g} a_1 v_1^2$, if w is the weight of unit volume; so that

$$a_1 \left(\frac{w_1 v_1^2}{g} + p_1\right) + a_2 \left(\frac{w_2 v_2^2}{g} + p_2\right) = a \left(\frac{w v^2}{g} + p\right) \quad . \quad . \quad . \quad . \quad (2)$$

This is true because the pipe by assumption exerts no force in the axial direction, and there are no other forces acting on the whole mass from the outside than what I have considered. It is evident that we can calculate v and p from (1) and (2).

(1) May be written—

$$v = \alpha_1 v_1 + \alpha_2 v_2 \quad . \quad . \quad . \quad . \quad . \quad . \quad . \quad . \quad . \quad . \quad . \quad . \quad (1)$$

where α_1 stands for $a_1 w_1 / (a_1 + a_2) w$, and α_2 for $a_2 w_2 / (a_1 + a_2) w$. Let us use e to represent $\frac{v^2}{2g} + \frac{p}{w}$ and (2) may be written—

$$e = \alpha_1 e_1 + \alpha_2 e_2 - \frac{1}{2g}\left\{(a_1 v_1 + a_2 v_2)^2 - a_1 v_1^2 - a_2 v_2^2\right\} \quad . \quad . \quad (2)$$

[1] In a practical case, say of a jet pump, these velocities and pressures will be the average velocities and pressures.

The advantage of this way of putting the matter lies in this, that, except for the usual friction which we meet with in pipes, e, after the mingling, will remain constant in the pipes, and we need no longer think that we can only make calculations at a section where $a = a_1 + a_2$. Thus, if we want to consider to what height h the combined stream will rise against zero pressure, e is h. If we want to consider P the pressure in pounds per square foot in a vessel into which the combined stream is to force its way through a pipe gradually getting larger, e is $\frac{P}{w}$. If we want to consider the velocity V with which the combined stream will enter the atmosphere, e is $\frac{2116}{w} + \frac{V^2}{2g}$.

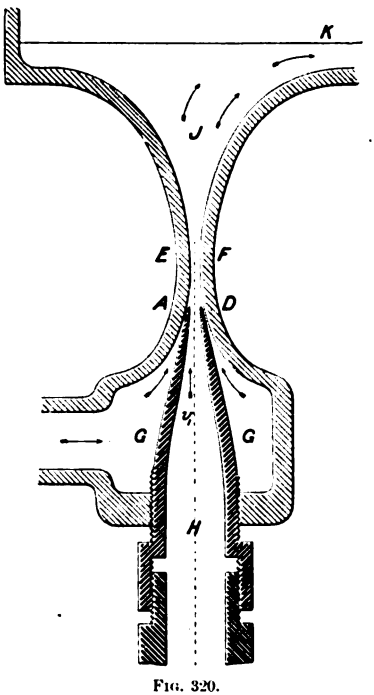

FIG. 320.

There is the further great advantage that from (2) we can easily find the waste of energy due to the mingling of the streams. The pressures may be either absolute or measured from any zero.

383. In liquids we take $w_1 = w_2 = w$ so that a_1 and a_2 mean $\frac{a_1}{a_1 + a_2}$ and $\frac{a_2}{a_1 + a_2}$ and $a_1 + a_2 = 1$. If the liquids have come from tanks whose atmospheric still surfaces are h_1 and h_2 feet above the jets, we may take h_1 and h_2 as representing e_1 and e_2 and e as the height to which the mingled stream will lift itself above the level of the jets against atmospheric pressure. In all cases, of course e is less than is shown in (2) because of friction.

If for a sensible length of the pipe at AD we may assume that the stream lines are all parallel to the axis (an assumption which I never make except with great reluctance), we may take it that $p_1 = p_2$, and the work is simplified.

384. To illustrate the use of our formulæ let us consider a case in which there are water streams only. In the **jet pump of Professor James Thomson,** a rapidly flowing jet of water passes through the nozzle H (Fig. 320) and mingling at AD with water which comes into the chamber G, the two streams are discharged at J.

Suppose that 1 cubic foot of water per second falls from a height of 60 feet, and passing through H mingles with 6 cubic feet of water per second, which enters G from a tank whose atmospheric still water surface level is the same as that of the jet. To what height will the combined stream rise with atmospheric pressure above it, neglecting all frictional loss except what is absolutely necessary for the mingling?

Take the atmospheric pressure as zero and assume that p_2 is that of a partial vacuum such as we may obtain by a careful adjustment of the nozzles; say that $\frac{p_2}{w} = -25$ feet where -34 feet would represent a perfect vacuum.

Hence $$\frac{v_2^2}{2g} = 25, \frac{v_1^2}{2g} = 85, v_1 = 74, v_2 = 40$$

$$a_1 = \frac{1}{74} = \cdot0135, a_2 = \frac{6}{40} = \cdot1500, a = a_1 + a_2 = \cdot1635$$

$$a_1 = \frac{\cdot0135}{\cdot1635} = \cdot0826, a_2 = \cdot9174.$$

Using (2) we find that

$$e = 11\cdot97 + 22\cdot94 - \frac{1832}{64\cdot4} = 6\cdot46$$

That is, the combined stream would rise to a height of 6·46 feet above AD if there was no friction except what is necessary for the mingling of the streams.

It is to be noticed that before mingling we have the energy 1×60 as compared with $7 \times 6\cdot46$ or 45·22 after the mingling.

EXERCISE. With the figures of the above exercise, assume that the jet is 4 feet above one water level and 56 feet below the other. Here

$$\frac{v_1^2}{2g} = 56 + 25, \frac{v_2^2}{2g} = 25 - 4, v_1 = 72, v_2 = 36\cdot78$$

$$a_1 = \frac{1}{72} = \cdot0139, a_2 = \frac{6}{36\cdot78} = \cdot1631, a = \cdot1770$$

$$a_1 = \cdot0785, a_2 = \cdot9215, e_1 = 56, e_2 = -4.$$

The student sees that I take motionless water on the level of the jet at atmospheric pressure as having $e = 0$.

Using (2) we find $e = 10\cdot75 + 15\cdot67 - 22\cdot62 = 3\cdot80$; or a lift of 3·80 feet above the jet; or a lift of 7·80 feet above the level of the lower tank.

We see therefore that the jet ought to be at as high a level as it

can be placed for best efficiency. In this case, by having the jet 4 feet above the water to be pumped, our energy before mingling being 1×60 becomes $7 \times 7{\cdot}80$ or $54{\cdot}6$, which is much better than the last case.

I have not yet worked long enough with the equation (2), nor worked enough numerical exercises to be able to put the matter more simply. The following exercise is less directly worked.

385. Suppose 1 cubic foot of water per second falls from a height of 60 feet, and passing through H, mingles with water which enters G from a depth of 4 feet. Assuming that $\frac{1}{8}$th of the energy is wasted before the mingling (as if the height were only 50 feet), and that another 10 per cent. is wasted in ordinary pipe friction after the mingling and in the delivery of the water, How much is wasted in the mingling itself? Neglect the difference of level between AD and K, the height to which the water is actually delivered.

We want to get some notion of the waste of energy, and we see at once that if $v_2 = v_1$, there is no waste. Here we have a very different state of things from that of the collision of two solid bodies. We can cause a jet with great energy per pound, but small quantity of stuff per second, to share its energy with another of great quantity, without loss of energy (in practice, without *much* loss of energy), if we take care that when the collision takes place we have produced, temporarily, an equal velocity in the jet of great quantity. Now in most practical cases the velocity v_2 will be limited. For example, in the jet pump the limiting value of v_2 will depend upon the height of AD above the level of the water which is being pumped; even neglecting friction and with a zero lift we cannot have v_2 as much as 47 feet per second. The limiting value of v_2 cannot be so great as $\sqrt{2g(34 - h)}$ if h is the lift to AD. In applying the method to the working of a turbine by water and steam we might have v_2 as great as $\sqrt{2g(34 + h)}$ if h is the possible height in feet at which a tank might be kept for cooling the exhaust water from the turbine; but if the exhaust water might be cooled in coming from the turbine to the jet part by passing through tubes cooled by outside water, it seems as if it might be possible to get v_2 very great indeed.

Here $\dfrac{v_1^2}{2g} = 50 + 25$ or $v_1 = 69$ feet per second

$\dfrac{v_2^2}{2g} = 25 - 4$, $v_2 = 37$; $a_1 = \dfrac{1}{69} = {\cdot}0145$ square feet.

$a_2 = q_2/37$ if q_2 cubic feet of water are pumped per second. I find that I have worked this exercise from the first form of equation (2) in page 600, measuring pressure from absolute zero.

The whole energy of the water at EF is to be the same as if it were motionless at atmospheric pressure plus 10 per cent. of the original energy per second of the jet water or 10 per cent. of $62{\cdot}3 \times 60$, or which is $373{\cdot}8$ or $6w$ if w is $62{\cdot}3$.

$$av(p - 2116) + \frac{wav^3}{2g} - 6w = 0 \quad . \quad . \quad . \quad (1)$$

(4) becomes

$$p = 576 + \frac{w}{g}\left(\frac{69}{a} + 37^2\frac{a_2}{a} - v^2\right) \quad . \quad . \quad . \quad (4)$$

Our unknowns are p, a_2, v, a, and besides (1) and (4) we have

$$1 + 37a_2 = av \quad . \quad . \quad . \quad . \quad . \quad . \quad (5)$$

and

$$\cdot 0145 + a_2 = a \quad . \quad . \quad . \quad . \quad . \quad . \quad (6)$$

Hence $1 + 37a_2 = (\cdot 0145 + a_2)v$.

386. Obviously the best way to find these unknowns is by trial. Now, if there were no loss of energy whatever, 1 cubic foot falling 44 feet (or 60 feet − the losses) could only lift 11 cubic feet 4 feet, and it is evident that we must look for a much smaller answer than this.

We first try therefore $q_2 = 6\frac{1}{6}$ or $a_2 = \frac{1}{6}$, a is $\cdot 1812$, p is 757 and (1) becomes 101 instead of 0. Trying other values of a_2 we at length find that $a_2 = \cdot 225$, $a = \cdot 24$, $v = 38{\cdot}93$, $p = 689$, $av = 9{\cdot}34$, so that the amount of water pumped is $9{\cdot}34 - 1$ or $8{\cdot}34$ cubic feet per second.

What vacuum is actually obtainable in jet pumps, I do not know; it does not seem to have been measured, but if it is less than that due to the 25 feet of water assumed above, the delivery will be less.

387. Flow of Steam from Orifices.

I shall assume that **the flow** to the orifice is **adiabatic.**

Let us consider what occurs at two cross sections at A and B of a stream tube in adiabatic flow, and neglect effects due to gravity.

A pound of stuff entering at A brings with it its intrinsic energy E, and has work done upon it as it enters, pV if V is its volume: that is, the space gains the energy $E + pV$ with every pound of stuff that enters. Now, for every pound entering there is also a

pound leaving the space, and it carries away with it the value of $E + pV$ at B. Hence the values of $E + pV$ must be the same everywhere along a stream line if the flow is adiabatic.

Now, if at any place a pound of fluid consists of x lb. of steam and $1 - x$ of water, and if $\lambda = l - pu$, l being latent heat; if u and u' are the volumes of a pound of steam and a pound of water, and v is the velocity, h being the heat energy in a pound of water,

$$E = h + \lambda x + \frac{v^2}{2g} \quad . \quad . \quad . \quad . \quad . \quad . \quad (1)$$

$$V = ux + u^1 (1 - x) \quad . \quad . \quad . \quad . \quad . \quad (2)$$

Hence along a stream line in adiabatic flow

$$h + \lambda x + \frac{v^2}{2g} + p \{ux + u^1 (1 - x)\} = \text{constant} \quad . \quad (3)$$

Thus, if steam flows from a boiler and $v = 0$, $x = 1$, where the pressure is p_0, and if at another place the pressure is p

$$h + x (\lambda + pu - pu^1) + pu^1 + \frac{v^2}{2g} = h_0 + \lambda_0 + p_0 u_0.$$

That is, the velocity is that due to the height

$$h_0 - h + \lambda_0 + p_0 u_0 - pu^1 - x \{\lambda + p (u - u^1)\} \quad . \quad (4)$$

of course u^1 is really negligible in this connection and $\lambda + pu = l$.

We may take $h_0 - h = J(\theta_0 - \theta)$

Hence

$$\frac{v^2}{2g} = J(\theta_0 - \theta) + l_0 - xl \quad . \quad . \quad . \quad . \quad . \quad (5)$$

If we can state the amount of heat energy lost by every pound of steam because the flow is not truly adiabatic, this produces a lessening of $v^2/2g$.

Applying the second law of thermodynamics:—Since the flow is adiabatic, the entropy is constant, or

$$\frac{xl}{t} + \log. t \text{ is constant.}$$

In the above case

$$\frac{l_0}{t_0} + \log. t_0 = \frac{xl}{t} + \log. t \quad . \quad . \quad . \quad . \quad . \quad . \quad (6)$$

or

$$x = \left(\frac{l_0}{t_0} + \log. \frac{t_0}{t}\right) \frac{t}{l} \quad . \quad . \quad . \quad . \quad . \quad . \quad (7)$$

388. Graphically, by means of the $\theta\phi$ diagram, $A_0B_0C_0$, Fig. 321, is the horizontal line drawn corresponding to the boiler temperature, and ABC to any other temperature at any place in the stream; then $BP \div BC = x$.

If AC is drawn corresponding to the lowest or terminal temperature where we want the greatest velocity v, x is the dryness of the steam at the end of the operation, and the area BB_0C_0PB represents the energy utilised, just as in a perfect engine on the Rankine cycle, Art. 214, only here the energy is stored up as kinetic energy.

Now, it is obvious that this adiabatic condition cannot hold close up to the water when steam and water jets collide; the whole of the steam becomes condensed because of the abstraction of heat,

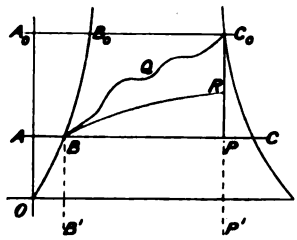

FIG. 321.

and if we know its rate of abstraction so that we can draw C_0QB (the area between C_0QB and the absolute zero line represents the total heat lost) we see that we must take the area BB_0C_0QB as $\frac{v^2}{2g}$, instead of the whole area BB_0C_0PB. In fact, the whole gain of kinetic energy is to be calculated in every case as if the work of steam expanding from p_0 to p were given to a piston. If the stuff gets rapidly cooled just at the end, we may in Fig. 321 assume adiabatic expansion, say to R, and then the curve of constant volume RB, as if the stuff were released from an ordinary cylinder without further expansion or doing of work. The area of an ordinary pv indicator diagram, will illustrate this very well. Some such loss as 25 to 50 per cent. of the whole energy must be assumed in practical cases where steam jets collide with water-jets, I think.

In academic exercises, like the following, I assume that real adiabatic expansion takes place.

Exercises to be worked Graphically.

Dry steam at the following boiler pressures and temperatures flows adiabatically, reaching the following lower temperatures with the velocities v.

Boiler steam (dry).		At the following lower temperatures the velocities are as given in feet per second.			
temp. Cent.	press. lb. per sq. in.	120° C.	80° C.	40° C.	20° C.
0° C.					
100	14·7	—	1630	2860	3340
110	20·8	..	1950	3045	3490
120	28·83	—	2225	3200	3570
130	39·25	1070	2450	3355	3750
140	52·52	1470	2625	3430	3860
160	89·86	1610	2635	3425	4060
200	225·9	2730	3450	4090	4390

389. It will presently be seen that the pressure in the jet is never less than ·578 of the higher pressure, and hence all the velocities of the above table, except two, are misleading, if we think of the steam flowing into an atmosphere. It may however be that at the nozzles of injectors these very great velocities do occur.

In calculating the flow of steam through an orifice, if A is the area of the jet where the stream lines are most nearly parallel, Av is the volume flowing per second, and divided by ux (neglecting the volume of the water) it is the weight in pounds per second, or Av/ux.

Of course, if the flow is into the atmosphere or a vessel at lower pressure, the kinetic energy is changed into heat after passing through the orifice, and the wetness is lessened, or the steam becomes dry or superheated. But the steam will be wet near the orifice.

We may put the above result algebraically. When any fluid, water, or wet steam, or dry steam, or superheated steam, or air, or any other gas flows adiabatically from a vessel at pressure p_0 where its velocity is 0 to a place where its pressure is p_1; we find the work which it would do if admitted to a cylinder with no clearance, when expanding adiabatically to p_1, and we know that this work is the gain of its kinetic energy or $\frac{v^2}{2g}$. Thus for **air or any other gas** this will be found to be

$$v^2 = \frac{2g}{w_0}\frac{\gamma}{\gamma - 1}\left({p_0}^{1-\frac{1}{\gamma}} - {p_1}^{1-\frac{1}{\gamma}}\right){p_0}^{1/\gamma} \quad . \quad . \quad . \quad . \quad (1)$$

if p_0 is the initial and p_1 the final pressure, if w_0 is the weight of unit volume at p_0; γ is 1·41 for air, 1·3 (doubtful) for superheated steam.

It will be found to answer also very nearly for **dry or wet steam** if we take as γ the value given in the table, page 362.

leaving the boiler dry,	$\gamma = 1{\cdot}130$
leaving boiler with 25 per cent. water	$\gamma = 1{\cdot}113$
„ „ „ 50 per cent. water	$\gamma = 1{\cdot}054$
„ „ „ 75 per cent. water	$\gamma = 0{\cdot}959$

Thus, for example, taking dry saturated steam at 130° C. flowing to a place at 120° C. this method gives 1,074 feet per second, whereas the true answer in the above table is 1,070. Again, dry steam flowing from 200° C. to 20° C. gets a velocity of 4,400 feet per second, whereas the correct answer according to the table is 4,390. [It will presently be seen that both these answers are misleading.]

It will be found on trial that if p_1 is very little less than p_0, the above formula is **approximately** the same as

$$v^2 = \frac{2g}{w_0}(p_0 - p_1) \quad . \quad . \quad . \quad . \quad . \quad (2)$$

EXERCISE. In a Thomson water turbine the velocity of the rim of the wheel is the velocity due to half the total available pressure: so in an air or steam turbine when there is no great difference of pressure, the velocity of the rim of the wheel is the velocity due to half the pressure difference. Thus if p_0 of the supply is 7,000 lbs. per square foot, and if p_1 of the exhaust is 6,800 lbs. per square foot, and if we take $w_0 = 0{\cdot}28$ lb. per cubic foot (as if it were air, or rather wet steam), then halving the pressure difference and using the above formula on 100 lbs. per square foot, we find

$$v = \sqrt{2g \times 100 \div {\cdot}28} = 151 \text{ feet per second.}$$

390. It is evident that as p_1 is made less and less, v the velocity increases more and more, and so does Q the cubic feet per second. But a large Q does not necessarily mean a large quantity of fluid. It is worth while taking an exercise like the following and studying the result.

Initial pressure $p_0 = 2$ atmospheres.

The following results are calculated for pressures p_1 varying between $1\frac{1}{2}$ and 0 atmospheres.

It is seen that the maximum W occurs when p_1 is about 1 atmosphere.

p_1 in atmospheres.	v velocity in feet per second.	W weight in pounds per second, assuming orifice 1 sq. foot area.
$1\frac{1}{2}$	683	89·8
1	1030	101·6
$\frac{3}{4}$	1200	96·6
$\frac{1}{2}$	1388	83·8
·4	1470	75·8
·3	1570	66·0
·2	1684	53·1

Such a numerical example suggests to us the general question what is the **maximum weight flow of a gas** through a throat.

Returning to (1) Art. 389, neglecting friction, if there is an orifice of area A near which the flow is guided, so that the streams of air are parallel: Q the volume in cubic feet flowing per second is $Q = vA$; the weight of stuff flowing per second is $W = vAw_1$ or $vAw_0\left(\frac{p_1}{p_0}\right)^{\frac{1}{\gamma}}$

Hence, using a for p/p_0 we have

$$W = A\sqrt{\frac{2g\gamma}{\gamma - 1}w_0p_0\left(a^{2/\gamma} - a^{1+1/\gamma}\right)} \quad . \quad . \quad . \quad . \quad (1)$$

It is an easy exercise in the calculus to find what value of a will cause W to be a maximum. Statement (2) which follows this expresses the answer. It really comes to this, that there is maximum flow when p_2 is somewhat greater than half p_1.

391. If there is no loss or gain of energy by friction, &c., the above rules for the velocity are absolutely true. But mistakes may be, and are, often made in regard to the value of the pressure p_2.

When a jet of water is visible passing through the atmosphere, all round it there is atmospheric pressure, but what is the pressure inside? We guess at this. If the stream lines are evidently nearly parallel at a place, it is probable that there is the same pressure from inside to outside. Correct guessing is easy in the case of visible water. But in the case of gases the guessing may not be easy; and, indeed, it was found by **Napier's experiments** on steam and subsequent ones on air, that when p_0 is greater than twice p_1, the shape of the jet and the shapes of the stream lines near the orifice are so utterly different from those of water (we always base our notions on the behaviour of water jets which we have seen), that

we rely upon experiment only, there being no theory to guide us. Whereas when p_0 is less than twice p_1, the theory is found to be as correct as with the flow of water. In fact, it is found that the pressure in the jet p_1 **never gets to be less** than the pressure corresponding to maximum flow, however low may be the pressure in the vessel into which the jet issues.

EXERCISE. Prove the following statements:—

1. When p_0 is less than $\frac{5}{3}$ of the external pressure, we may take as roughly correct the **flow of steam** in pounds per second through the area A square feet to be

$$W = \frac{Ap_1}{34}\sqrt{\frac{p_0 - p_1}{p_1}},$$

the pressures being in lb. per square foot, and that this is right if A is in square inches and the pressures are in lb. per square inch.

2. For W in Art. 390 to be a maximum, we must have

$$a = \left(\frac{\gamma+1}{2}\right)^{\frac{\gamma}{1-\gamma}}, \text{ or } p = p_0\left(\frac{2}{\gamma+1}\right)^{\frac{\gamma}{\gamma-1}}.$$

3. In the **case of air,** $\gamma = 1{\cdot}41$, so that if there is maximum flow $p_1 = {\cdot}527\, p_0$.

4. In the case of **superheated steam,** $\gamma = 1{\cdot}3$, possibly, so that if there is maximum flow $p_1 = {\cdot}546\, p_0$.

5. In the case of **dry saturated steam,** $\gamma = 1{\cdot}130$, so that if there is maximum flow $p_1 = {\cdot}578\, p_0$.

6. In the case of steam leaving the boiler with 25 per cent. of water $\gamma = 1{\cdot}113$, approximately, so that if there is maximum flow $p_1 = {\cdot}582\, p_0$.

7. If dry steam flows adiabatically from a boiler where the pressure is p_0 lb. per square foot to a place where the pressure is $p_1 = 0{\cdot}578\, p_0$, show that its weight, w lb. per cubic foot, is $w_1 = 1{\cdot}762 \times 10^{-5} p_0^{0{\cdot}939}$.

To do this we may take $p_0 w_0^{-1{\cdot}13} = p_1 w_1^{-1{\cdot}13}$.

Also $p_0 w_0^{-1{\cdot}065} = 479 \times 144$. (See (9) Art. 180.)

EXERCISE. Calculate the values of w_1 for various values of p_0 given in the following table. It is evident from this that in rough calculations we may take it that $w_1 = 10^{-5} p_0$.

8. Show that the limiting velocity of a gas in (1) Art. 389 if the condition of maximum weight flow holds is

$$v_1 = \sqrt{\frac{2g}{w_0}\frac{\gamma}{\gamma+1}\, p_0},$$

if p_0 is in lb. per square foot, w_0 being in lb. per cubic foot.

In the case of dry steam, taking $\gamma = 1{\cdot}13$, this becomes

$$v_1 = 5{\cdot}845\sqrt{p_0} \div w_0.$$

EXERCISE. Find the limiting velocity v_1 with which steam will rush into an atmosphere at a pressure less than ·57 of its initial pressure, if the initial pressure is as given in the table.

$p_0 \div 144$.	p_0.	limiting v_1.	Value of n if $w_1 = np_0$.	Values of m in $W = mp_0A$.
300	43200	1512	$\cdot9185 \times 10^{-5}$	·0140
200	28800	1496	$\cdot9414 \times 10^{-5}$	·0142
100	14400	1464	$\cdot9822 \times 10^{-5}$	·0145
50	7200	1432	$1{\cdot}024 \times 10^{-5}$	·0148
30	4320	1410	$1{\cdot}057 \times 10^{-5}$	·0150

We see, then, that the limiting velocities do not greatly differ from one another, although in every case the efflux may be into the atmosphere or a condenser. It seems as if there was some limit less than the velocity of sound.

In practical calculations I often take it that the limiting velocity is always 1450 feet per second, if p_0 has any value between 150 and 60 lb. per square inch.

EXERCISE. Find the limiting weight W lb. of steam per second which will flow through an area A square feet, using the above values of v_1 and w_1.

Answer. $W = \cdot0194\, p_0^{0{\cdot}969} A$.

EXERCISE. If we assume that $W = mp_0A$, what is m for the values of p_0 in the table? The answers are given.

We see that we may in rough calculations take the following rule:—

9. The greatest weight of steam in pounds per second flowing through a throat of area A square feet is v_1w_1A, or roughly,

$$W = \frac{1}{70} p_0 A.$$

This is the result arrived at **experimentally** by Mr. Napier. This formula may be used if p_0 is in lb. per square inch and A is in square inches.

392. Theory of the Injector.—Dry saturated steam W_1 lb per second from the boiler, at pressure p_0 and temperature θ_0° C. reaches B, Fig. 323, adiabatically, where it is at p_1 and θ_1° C., and it condenses, meeting W_2 lb. of water at θ_2° C. and pressure p_2, which

has risen from the feed tank by the pipe A. The combined stream at θ_3° C. passes into the feed pipe at E and through the valve G to the boiler by H.

1. Assume no steam to escape condensation and no water to slip between D and E. Also that the whole of the heat of a pound of steam leaving the boiler is in the mixture at D and E; that is,

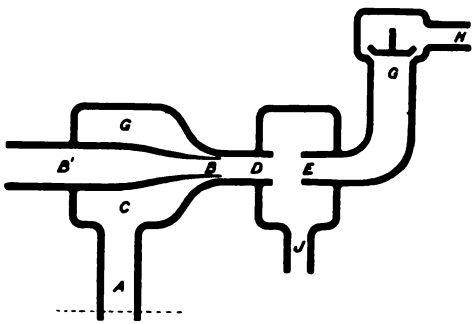

FIG. 323.

neglect the fact that a small fraction of the heat has been converted into kinetic energy. Then if H_0 is Regnault's total heat,

$$W_1(H_0 - \theta_3) = W_2(\theta_3 - \theta_2).$$

2. As the pressure in the overflow J is atmospheric, assume that it is so at E, so that if p_0 is the boiler pressure in pounds per square inch, the velocity at E must be

$$V = 12\sqrt{p_0 - 14{\cdot}7}$$

feet per second neglecting friction. The area A at E is

$$A = \frac{{\cdot}016\,(W_1 + W_2)}{V},$$

taking ·016 as the volume of 1 lb. of water.

3. I shall not attempt to give a theory of what happens when the streams of condensing steam and water meet, but we may take Fig. 324 as showing what may possibly occur at $ABCD$ and EF of our old Fig. 320. Through the area a_1 square feet there is a flow of W_1 lb. of wet steam per second at the pressure p_1 and velocity v_1. Through the outer area a_2 we have W_2 lb. of water per second at the velocity v_2, which has come from a tank whose atmospheric still water level is h_2 feet *above* the jets. Through the area $a = a_1 + a_2$ or EF we have $W_1 + W_2$ lb. of water flowing per second

at pressure p, with velocity v, each pound of it possessing the total energy

$$\frac{v^2}{2g} + \frac{p}{w}.$$

If there were no friction except what is necessary for the mingling, the total energy required if the water is to enter a boiler at pressure P is P/w.

Until Napier's experiments on the flow of steam from a boiler at p_0 into a place of low pressure, no one dreamt that the velocity was that corresponding to the notion that there is a pressure 0·58 p_0 or 0.6 p_0 in the throat. It would now be very absurd for us with our **exceedingly small knowledge** to build a theory of the injector on the supposition that p_1 is 0·6 p_0, and that v_1 is always about 1,450 feet per second, and to use the formula of Art. 382. Should any one care to do it, and if as before $v_2^2/2g$ is taken to be $h_2 + 25$ when the nozzles are properly adjusted; if W_1 is taken to be $\frac{p_0 a_1}{70}$, and if W_2/W_1 is called y, we arrive at the equations

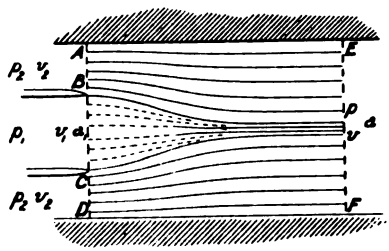

FIG. 324.

$$87 + \frac{2y}{v_2}(h_2 + 30) = (1 + y)\left(\frac{v}{g} + \frac{p}{vw}\right) \quad . \quad . \quad . \quad . \quad (2).$$

$$\frac{4360}{p_0} + \frac{y}{v_2} = \frac{1 + y}{v} \quad . \quad . \quad . \quad . \quad (1).$$

Given y and p_0 we can find v from (1); use it on (2) to find p, and calculate

$$P = w\left(\frac{v^2}{2g} + \frac{p}{w}\right),$$

the pressure in the vessel into which the combined jet may be forced.

But if the student uses this method he will find that although when $p_0 = 45 \times 144$ and $y = 9$, P is sufficiently greater than p_0 to show that the injector would work; if he tries much higher values of p_0 and y, the injector will not work. In fact his results do not agree with experience, and therefore his theory is worthless. It is quite

possible indeed that v_1 reaches values very greatly exceeding the values found by Napier under such very different circumstances.

It may be worth while here to say that all the best writers use Napier's v_1 in the formula—

$$(1 + y)\left(V - \frac{gh_2}{V}\right) = v_1$$

to calculate V the velocity with which the combined steam passes the space where it is at atmospheric pressure. When h_2 is 0 this is—

$$V = \frac{v_1}{1 + y}$$

as if we had two solid bodies of masses 1 and y colliding in a vacuum with velocities v^1 and 0, V being their common velocity after impact. The formula is said to agree in a few cases with the actual experimental results, but to greatly disagree in most cases. One thing I know, it is always arrived at by what is called "a theory of the Injector," which is one of those pretences sometimes to be found in books on applied science where weak mathematics hides the want of reason.

I hardly know if it is worth while here to say that if in my theory we assume p_1 and p_2 to be equal, and both equal to that due to the head h_2 and neglect the small term $h_2 g/v_1$ and assume that a_1 is much less than what it really is: in fact that $w_1 = w$, we get the commonly received formula. But I see no scientific reason for such assumptions.

393. I have never made accurate experiments with an injector. I copy from Mr. Peabody's excellent "Thermodynamics of the Steam Engine," the following results of **experiments on a Sellers injector** whose combining tube or water orifice is 6 mm. in diameter where smallest.

For each pressure of steam noted in column 1, the water was delivered by the injector into the boiler under approximately the same pressure. The delivery was measured by observing the indications of a water-meter.

The pressures in column 8 were obtained by throttling the steam supplied to the injector, and observing the pressure at which it ceased to work, each experiment being repeated several times with precisely the same results.

The temperatures in column 9 were obtained by gradually heating the water supplied to the injector, and noting the temperature at which it ceased to operate, each temperature recorded being checked by several repetitions of the experiment.

EXPERIMENTS ON A SELLERS INJECTOR.

Gauge pressure of Steam supplied to Injector, and pressure against which water is delivered. lbs. per square inch.	Delivery in cubic feet per hour.			Temperature, Fahrenheit degrees.			Pressure of Steam required to deliver Water against pressure in column 1.	Highest temperature Fahr. admissible of feed-water.
	Maximum.	Minimum.	Ratio of minimum to maximum delivery.	Feed water.	Delivered water. At maximum delivery.	Delivered water. At minimum delivery.		
1	2	3	4	5	6	7	8	9
10	75·3	63·6	0·845	66	100	94	3	132
20	82·4	61·2	0·743	66	108	104	9	134
30	94·2	56·5	0·600	66	114	116	16	134
40	100·1	60·0	0·599	66	120	123	22	132
50	108·3	64·7	0·597	66	124	125	27	131
60	116·5	63·6	0·546	66	127	133	34	130
70	124·8	63·6	0·510	67	130	142	40	130
80	133·0	67·1	0·505	66	134	144	46	131
90	141·3	69·5	0·492	67	136	148	52	132
100	147·2	64·7	0·456	66	140	159	58	132
110	153·0	67·1	0·439	67	144	162	63	132
120	156·6	73·0	0·466	67	148	162	69	134
130	161·2	74·2	0·460	66	150	165	75	130
140	166·0	78·9	0·476	66	153	166	81	126
150	170·7	70·6	0·414	66	157	167	18	121

Taking the case in which $p_0 = 150 + 14{\cdot}7$ lb. per sq. in., $\theta_0 = 366°$ F., $\theta_3 = 157°$ F., $\theta_2 = 66°$ F., $H_0 = 1194$.

$$y = \frac{H_0 - \theta_3}{\theta_2 - \theta_3} = \frac{1040}{91} = 11{\cdot}43.$$

$$v_1 = 5{\cdot}845\sqrt{164{\cdot}7 \times 2.76} = 1247 \text{ feet per second.}$$

$$v = \frac{1247}{1 + 11{\cdot}43} = 100 \text{ feet per second.}$$

If P lb. per sq. in. is the *gauge* pressure of delivery

$$100 = 12\sqrt{P} \text{ or } P = 69{\cdot}44,$$

that is, the pressure of the delivered water is not half the boiler pressure in spite of our assumption of no friction. Hence the usually accepted formula has not only no scientific basis but it has not even the virtue of agreeing with experimental results. I think

that there can be no theory of the injector until some scientific man makes a complete experimental investigation of the subject.

394. EXERCISE. Taking the above case, that each pound of steam at 366° F. generated from feed water at 157° F. causes 11·43 lb. of water to enter the boiler. **Compare the performance** with the mechanical energy produced by a perfect non-condensing steam engine.

The work done per pound of steam is $\frac{11{\cdot}43}{62} \times 150 \times 144$ or 3982 foot pounds. A perfect non-condensing steam engine using steam at 366° F. would do (see Art. 214) 250,800 foot pounds per pound of steam. Of course it is to be remembered that the waste heat is utilized in heating the feed water.

395. This is not the place for other **speculations** such as I have made on injectors. It may, however, be worth while to mention that I anticipate greatly increased efficiency in the driving of water by steam jets by making the steam nozzle telescopic so that more and more steam enters as the water quickens in speed; not all entering at one place.

Fig. 138*a* shows one ordinary form of the single acting injector. To start it we open the steam valve a little, then the water supply valve, and as soon as water appears at the overflow we open the steam valve more and more until the overflow ceases. As air is drawn in to some extent and may be objectionable in condensing engines there is sometimes a non-return valve attached to the overflow, a weak spring pressing with a little more force than the weight of the valve.

Injectors ought **to be tested** for pressures of delivery 10 to 15 lb. above the boiler pressure, to allow for friction and the lifting of the valve. The **lift to the boiler** is seldom more than 20 feet. With a high lift there is sometimes difficulty on account of the non-condensation of the supply steam. The **feed tank temperature** ought to be as low as possible, else there may not be complete condensation of the steam. An injector whose nozzles are properly adjusted for a certain boiler pressure needs re-adjustment for other pressures, and there are **self-adjusting injectors** in the market. In **double action** injectors the water is first admitted to an intermediate space, and by means of a fresh jet of steam is injected into the boiler.

It will be seen by the above table that injectors will supply water at a greater pressure than that of the supply stream. Hence a jet of the **exhaust steam** from a non-condensing engine is sometimes used for feeding the boiler.

The injector is often used as a very inefficient pump, especially in chemical works. When the lift is small as in "**Ejectors**" and especially when the water enters through telescopic openings so that the water first set in motion by the steam is greatly added to later, it is said that there is a greatly increased efficiency. Ejectors are often arranged so that they act as a sort of combination of condenser and air-pump.

CHAPTER XXXV.

CYLINDER CONDENSATION.

396. IN this chapter I consider the growth of water in the cylinder, using the answers to some mathematical problems in speculation. In our study we are apt to assume that the pressure of steam as given by the **indicator tells us the temperature** of steam and water everywhere in the cylinder. Indeed, this is the basis of our application of the $\theta\phi$ diagram to practical problems; an experienced man knows that the static laws are to be applied with caution and merely with the object of obtaining suggestions; the young student believes in the absolute truth of such a $\theta\phi$ diagram as my students draw for the whole of an indicator diagram.

I have already referred to the misleading notion conveyed by diagrams of cushioning. In further reference to this matter I will refer to Mr. Callendar's thermometer, which was fixed in a hole in the cylinder cover. The results are shown in Fig. 325. The temperatures corresponding to the pressure on the indicator diagram are shown in the full line curve; the temperatures given by the platinum thermometer are shown on the dotted curve, the temperature scale (Fahr.) being the same for both. **The superheating** shown at the end of the compression is very noticeable. During admission the temperature rapidly falls. Shortly after cut off the temperature is 2° or 3° Fahr. below that of the indicator diagram.

I hold that the thermometer in the end of the cylinder in Mr. Callendar's experiments measured something which was very different from the temperature anywhere else. No exact description has been given of the hole inside which the temperature was measured, but I take it that it was a **hole which might be dry** when other parts of the cylinder were wet, and that there probably was actual mechanical drainage from that hole of condensed water. Now all condensed

water draining away came into the hole as dry steam, and its latent heat is left behind, heating the steam about the thermometer and keeping it drier than other steam in the cylinder. He obtained higher temperatures there than the temperature of the incoming

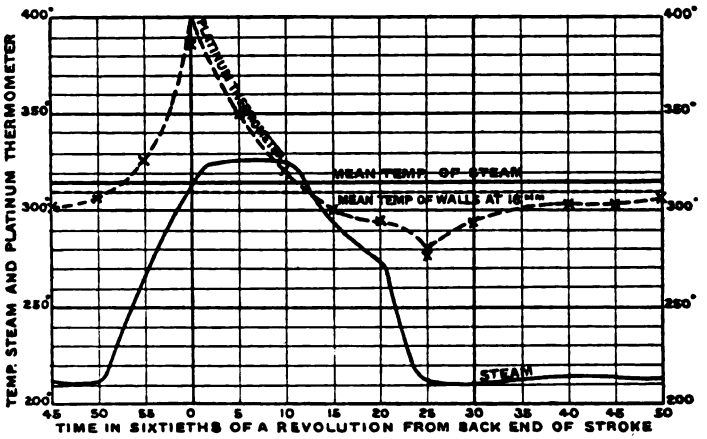
TEMP. STEAM AND PLATINUM THERMOMETER
400°
350°
300°
250°
200°
PLATINUM THERMOMETER
MEAN TEMP. OF STEAM
MEAN TEMP OF WALLS AT 16ths
STEAM
45 50 55 0 5 10 15 20 25 30 35 40 45 50
TIME IN SIXTIETHS OF A REVOLUTION FROM BACK END OF STROKE

PLATINUM THERMOMETER IN STEAM IN $\frac{3}{8}$-INCH HOLE IN COVER.

FIG. 325.

steam, but this was simply due to the dry steam in the hole being compressed in the hole. Suppose dry steam in a dry hole with a tube-like entrance, the fresh steam compresses it like a piston.

EXERCISE.—A pound of dry saturated steam at 100° C. is compressed adiabatically to the pressure 102 lb. per sq. inch by a fresh charge of saturated steam (or a piston). What is its temperature? The temperature of the saturated steam which is in contact with it is 165° C.

This is very easily worked out on the $\theta\phi$ diagram. R Fig. 231 shows its state before compression at 100° C. D at 165° C. is the end of the superheated steam curve DE of 102 lb. pressure, and RE is the line of adiabatic compression. I find on the diagram that E means 328° C. I take here as roughly correct that the specific heat of superheated steam is 0·475.

Algebraically:—The entropy of a pound of steam at R is 1·744 ranks. This is also to be the entropy at E of a pound of superheated steam at 102 lb. per sq. inch. Now the entropy of a pound of superheated steam at any temperature and pressure is given in (2) Art. 201 as 1·594 (the entropy at D) + $0{\cdot}475 \log \frac{t}{t_0}$ where t_0 is the absolute temperature at D, and t is the absolute temperature at E. That is,

$$1{\cdot}744 = 1{\cdot}594 + 0{\cdot}475\ (\log_e t - \log_e 438{\cdot}7)$$

$$\log_e t = 2{\cdot}7795, \text{ so that } t = 602.$$

The temperature at E is, then, 328° C.

Now, in the actual experiment, the superheating only reached 200° C., being followed by a sharp fall.

My figure, 328° C., could only be reached in a non-conducting hole and on the assumption of a very long narrow entrance. The paper says that it was a hole merely, and in all probability the thermometer was not far away from the fresh steam; as soon as the fresh steam had a little time to mix with the superheated steam there would be just such a fall of temperature as was noted. Some of Mr. Callendar's ingenious reasoning concerning dynamic effects as being different from static effects, with nearly all of which, however, I quite agree, are really based upon the temperature changes in a little well-drained pocket of steam and not the average steam in the cylinder, which is really that corresponding to the pressure.

I have referred to this matter at some length because I believe there is **always water** and the saturation temperature at all times of the stroke, **even in the driest cylinders,** unless a large amount of superheating is employed.

If the cylinder were for an instant quite dry, I do not believe that condensation would readily begin in the same stroke. It is to be remembered also that it is the existence of water round the piston and valves that enables leakage to be 50 times as great as if there was no water.

I have had the opportunity of watching smoke drawn into a glass cylinder with air after a piston for the purpose of noting whether or no the smoke and air kept separate. Any one who has seen, as I have seen, the immediate mixing that goes on in spite of all sorts of attempts to keep the stuffs separate, must know that it can only be in well-drained holes that any superheating can possibly take place. Mr. Callendar's other thermometer in the body of the steam showed a temperature corresponding to the pressure.

But although I think the temperature of the steam to be nearly the same everywhere, I do not think it possible that the water temperature is the same throughout. In much that follows I shall assume it to be the same throughout.

397. In the rough generalisation of Arts. 227–233 we have assumed that the resistance to the passage of heat between steam and metal skin is constant, and we have neglected the effect on c of w_3 the water present before admission. It is my belief that neither of these assumptions is sound. **A more careful study of the whole question** seems to me necessary; a study of the growth and diminution of w_3 per cycle. It must not be imagined that I am looking merely for a simple formula. Indeed, it is quite obvious that there is **no simple formula** possible to express what

goes on in the cylinder of a steam engine. We have all notions about what occurs; it is only when we **express these notions quantitatively** that their value can be judged of. It is of no importance that we shall perhaps get no simple formula. Our main business is to try to reason clearly about what occurs, with a minimum of vagueness and "huggermugger."

The following problems are worked out exactly on certain assumptions. From the answers I shall endeavour to make reasonable speculations as to what goes on in the cylinder.

398. *Problem I.* A perfectly non-conducting vessel contains w lb. of water, also dry saturated steam *at the same temperature* θ. Let this temperature be supposed to alter, the steam being supposed to condense or vaporise just enough for the heating and cooling of the water, but to remain dry saturated steam. If l is the latent heat of steam at the temperature θ; if θ becomes $\theta + \delta\theta$, w increases to $w + \delta w$ by the condensation of δw of steam. Hence, $l \,.\, \delta w = w \,.\, \delta\theta$ or $dw/w = d\theta/l$, and as l is a function of θ, w is a function of θ. Hence, at the end of any cycle, as θ returns to its old value, w returns to its old value.

Taking l as $606{\cdot}5 - 0{\cdot}695\,\theta$ we see that wl^{σ} remains constant throughout, σ being $\frac{1}{{\cdot}695}$.

399. *Problem II.* A metal vessel of constant volume and internal area is filled with saturated steam at the temperature $\theta°$ C. and this temperature follows a periodic law. There is of water w lb. per unit area of the metal surface present at the time t. I assume that steam is condensed or water evaporated merely for the purpose of keeping the water at the temperature of the steam. v is the temperature of the metal at a depth x from the surface, and the metal is supposed to be so thick that time variations in temperature do not occur at its outer parts. The metal's thickness is b, and the outer surface is kept, by means of a steam jacket, at the temperature v^1 above the average temperature of the steam. We have in the metal, as before, in Art. 227,

$$\frac{d^2v}{dx^2} = \frac{s\rho}{k}\frac{dv}{dt} \quad \ldots\ldots\ldots\ldots \quad (1)$$

At the surface, between water and metal, if e is the emissivity and v_0 is the surface temperature of the metal,

$$v_0 - \theta = \frac{k}{e}\frac{dv}{dx} \quad \ldots\ldots\ldots \quad (2)$$

Also the condensation of water occurs according to the law

$$(v_0 - \theta)e + l\frac{dw}{dt} = w\frac{d\theta}{dt} \quad \ldots\ldots\ldots \quad (3)$$

l being the latent heat of steam at the temperature θ. It will be noticed that I assume an instantaneous establishment of equilibrium of temperature between steam and water; I wish I could work to a more complex condition, but this will suffice for my present object.

θ and v_0 are periodic functions of the time. I have often, with my students, worked out the problem on the assumption of the most general shape of periodic function, but it will be found quite sufficient to take the simplest,

as in Art. 227. Let the skin temperature of the metal be

$$r_0 = a \sin qt + \theta_0 + kv^1/(eb + k) \quad . \quad . \quad . \quad . \quad . \quad . \quad . \quad (4)$$

We know that

$$v = ae^{-ax} \sin (qt - ax) + \theta_0 + a \frac{v^1}{eb + k}(k + ex)$$

and

$$\theta = a\left(\frac{ka}{e} + 1\right)\sin qt + a\frac{ka}{e}\cos qt + \theta_0 \quad . \quad . \quad . \quad . \quad (5)$$

where if $q = 2\pi n$, $a = \sqrt{\pi n s \rho / k}$

(3) is

$$\frac{dw}{dt} - \frac{w}{l}\frac{d\theta}{dt} = \frac{(\theta - r_0)e}{l}$$

Now

$$\int \cdot\cdot \frac{1}{l}\frac{d\theta}{dt}\,dt = \int -\frac{d\theta}{l} = \int \frac{-d\theta}{606{\cdot}5 - {\cdot}695\theta} = \frac{1}{{\cdot}695}\log l = \sigma \log l$$

say, and hence we see that the solution of (3) is

$$w = l^{-\sigma}\left\{e\int l^{\sigma-1}(\theta - r_0)\,dt + c\right\} \quad . \quad . \quad . \quad . \quad . \quad (6)$$

where c is an arbitrary constant.

am sorry to say that I can perform this integration only approximately. I am aware, from my experience in electrical work, how dangerous approximate calculations are likely to be in dealing with periodic functions, but I feel satisfied that my solution is sufficiently correct for my present purpose. Once I remember laboriously working out a second approximation, and the correction did not affect the conclusions which this first approximation leads to. The latent heat l be ng $l_0 - {\cdot}695(\theta - \theta_0)$ where l_0 is the latent heat corresponding to θ_0° C., my approximation consists in taking

$$l^{\sigma-1} = l_0^{\sigma-1}\left\{1 - \frac{{\cdot}695(\sigma - 1)(\theta - \theta_0)}{l_0}\right\} = l_0^{\sigma-1}\left\{1 - \frac{{\cdot}305}{l_0}(\theta - \theta_0)\right\}$$

I only want to know those terms in w **which are not periodic**; terms which increase or diminish steadily with the time.

On writing out (6) there are many terms, each of which is easily integrated, and the answer is

$$w = \text{Periodic terms} + el^{-\sigma}l_0^{\sigma-1}\left[\text{Periodic terms} - \left\{\frac{kv^1}{eb + k} + \frac{{\cdot}305\,a^2k^2a^2}{l_0e^2}\left(1 + \frac{e}{2ka}\right)\right\}t\right] \quad . \quad . \quad . \quad . \quad . \quad . \quad . \quad (7)$$

The answer is, as I have said, approximate. In calculating its value numerically, to get ideas of its meaning, we may take l_0 instead of l.

I find, using A for the amplitude of θ or $\frac{1}{2}(\theta_1 - \theta_2)$ and dividing the non-periodic terms by n, that the diminution of w per cycle is

$$\frac{1}{n}\left\{\frac{kv^1}{l_0(b + k/e)} + \frac{{\cdot}305A^2}{l_0^2}\frac{e}{(1 + e/ka)^2 + 1}(1 + e/2ka)\right\} \quad . \quad . \quad (8)$$

The steam jacket effect was, of course, obvious, and we need not have carried it through all the work as we have done. The other term was not by any means so obvious. We see that if e is 0, so that it is as if the metal of the cylinder were non-conducting, there is no loss of w per cycle, as we found in Art. 398.

If, as we may presume that it often is, e is small, and we neglect the steam-jacket effect, we find the loss of w per cycle to be proportional to A^2e/n or to

$$e(\theta_1 - \theta_3)^2/n \quad \ldots \ldots \ldots \ldots \quad (9)$$

If e is large enough to make the amplitude of v_0 nearly the same as that of the steam, the lessening of w per cycle is proportional to

$$(\theta_1 - \theta_3)^2/\sqrt{n} \quad \ldots \ldots \ldots \ldots \quad (10)$$

A very striking result, showing that the metal acts in an altogether different manner from that in which a quantity of water would act.

I will here indulge in a little speculation, and say that, just as in Art. 230, the departure from the sine function form of temperature change will be to cause us to use as the coefficient of $(\theta_1 - \theta_3)^2$ neither $\frac{1}{\sqrt{n}}$ nor $\frac{e}{n}$ but $\frac{e\left(g + \frac{h}{r}\right)}{\sqrt{n} + cn}$, where e is proportional to the emissivity when small, but approaches a constant value when the emissivity is great, and where g and h and c are constant.

400. I shall now try to approximate in a few problems which may be worked out mathematically to the departure in the actual condition of things from the above assumptions of Problems I. and II. There can be no doubt that Problem II. gives us pretty clear notions of the effect of the conductivity of the metal, our only trouble in this connection being our want of knowledge of e. In what follows I shall assume **a non-conducting cylinder.**

Problem III. Admission—Expansion—Release.—Non-conducting cylinder—Dry saturated steam supplied.—My reasoning will be mathematically correct on certain assumptions which ought to be criticised. I shall always neglect the volume of the water, and assume its specific heat to be constant.

1. Admission.

My assumption is that the steam is supplied at the pressure p_1. Whether there is wire-drawing or not does not matter, as I assume that valves and metal everywhere are non-conducting. The vessel is of volume V, containing w_3 lb. of water and V/u_3 lb. of steam. The intrinsic energy of 1 lb. of steam is $H - \frac{pu}{J}$ if Regnault's total heat H is in heat units. J is Joule's equivalent, p the pressure in pounds per sq. foot, u the volume of 1 lb. of steam in cubic feet.

The intrinsic energy of the stuff before admission is

$$\frac{V}{u_3}\left(H_3 - \frac{p_3u_3}{J}\right) + w_3\theta_3.$$

After admission we have V/u_1 lb. of steam and w_1 lb. of water. So that the quantity of stuff which enters is $V/u_1 + w_1 - (V/u_3 + w_3)$. The intrinsic energy is now $VH_1/u_1 - Vp_1/J + w_1\theta_1$.

Every pound of steam entering gives to the vessel the total energy H_1, because it brings with it its own intrinsic energy $H_1 - p_1u_1/J$, and also it has the work p_1u_1 done upon it by the steam which follows it up. Hence

$$VH_3/u_3 - Vp_3/J + w_3\theta_3 + H_1\{V/u_1 + w_1 - (V/u_3 + w_3)\} = H_1V/u_1 - Vp_1/J + w_1\theta_1.$$

Hence, if w_3^1 is V/u_3, the weight of the steam alone which is with the water before admission, we have

$$w_1 = w_3(H_1 - \theta_3)/l_1 + w_3^1\{H_1 - H_3 - (p_1 - p_3)u_3/J\}/l_1.$$

I am particularly anxious to know the effect of w_3^1 (or rather of the volume)

in diminishing the water, but I have also calculated other coefficients in the following cases. If it is recollected that w_3^1 is always a very small quantity, it will be seen that the drying effect due to volume is not great.

θ_1	θ_3		$\left(\frac{l_3}{l_1}\right)^\epsilon$
195° C.	155° C.	$w_1 = 1{\cdot}092\, w_3 - 0{\cdot}123\, w_3^1$	1·092
,,	100	$w_1 = 1{\cdot}209\, w_3 - 1{\cdot}033\, w_3^1$	1·218
,,	60	$w_1 = 1{\cdot}295\, w_3 - 5{\cdot}301\, w_3^1$	1·311
180	145	$w_1 = 1{\cdot}077\, w_3 - 0{\cdot}107\, w_3^1$	1·077
	100	$w_1 = 1{\cdot}170\, w_3 - 0{\cdot}699\, w_3^1$	1·177
	60	$w_1 = 1{\cdot}258\, w_3 - 3{\cdot}70\ w_3^1$	1·267
165	135	$w_1 = 1{\cdot}061\, w_3 - 0{\cdot}091\, w_3^1$	1·064
	100	$w_1 = 1{\cdot}135\, w_3 - 0{\cdot}425\, w_3^1$	1·140
	60	$w_1 = 1{\cdot}218\, w_3 - 2{\cdot}50\ w_3^1$	1·227
145	100	$w_1 = 1{\cdot}09\ w_3 - 0{\cdot}219\, w_3^1$	1·093
	60	$w_1 = 1{\cdot}17\ w_3 - 1{\cdot}39\ w_3^1$	1·177

It will be evident from the magnitude of the other sources of growth and diminution of w that we may neglect the effect of w_3^1 as a disturbing element in our reasoning. I shall speak again of the relative magnitudes of the disturbing elements in Art. 403.

In my generalisation of Art. 398, I assume that

$$w_1 = w_3 \left(\frac{l_3}{l_1}\right)^\epsilon \quad \ldots\ldots\ldots\ldots \quad (1)$$

and the student will notice here the discrepance. Neglecting the evaporative effect of the clearance volume, we now find

$$w_1 = w_3 \frac{H_1 - \theta_3}{l_1} \quad \ldots\ldots\ldots\ldots \quad (2)$$

What is the reason that there is any difference? It is this:—To get (2) I assumed that there was equilibrium of temperature everywhere only at the beginning and at the end; whereas to get (1) I assumed equilibrium of temperature at every instant during the change from θ_3 to θ_1. In (2) it is the same kind of dry saturated steam which is condensing all the time; whereas in (1) the condensing steam gradually alters in character. A small amount of wetness in the entering steam will cause the non-reversible operation to produce the same effect as the reversible one.

2. Adiabatic Expansion.

This is easily worked out on the $\theta\phi$ diagram. I shall here work it out algebraically:—w_1 lb. of water and i lb. of indicated steam in a cylinder at θ_1 expands adiabatically to θ_2, becoming w_2 lb. water and w_2^1 lb. steam.

Let $\phi = \log \frac{l}{l_0}$ be the entropy of 1 lb. of water.

Let $\psi = \phi + \frac{l}{t}$ be the entropy of 1 lb. of steam.

The entropy at the beginning is equal to the entropy at the end, and therefore

$$w_1\phi_1 + i\psi_1 = w_2\phi_2 + w_2{}^1\psi_2$$

$$\text{Also } w_2{}^1 = w_1 + i - w_2$$

$$w_1\phi_1 + i\psi_1 = w_2\phi_2 + (w_1 + i - w_2)\psi_2$$

Hence

$$w_2 = w_1\left(1 - \frac{t_2}{l_2}\log.\frac{t_1}{t_2}\right) + i\left(1 - \frac{t_2}{t_1}\frac{l_1}{l_2} - \frac{t_2}{l_2}\log.\frac{t_1}{t_2}\right). \quad . \quad . \quad (3)$$

In my generalisation I assume that the term created by w_1 is $w_1\left(\frac{l_1}{l}\right)^\sigma$ The following examples show what sort of difference exists :—

r	θ_1	θ_2	$1 - \frac{t_2}{l_2}\log.\frac{t_1}{t_2}$	$\left(\frac{l_1}{l_2}\right)^\sigma$
2	195	165	·941	·936
5	,,	130	·883	·871
13	,,	102	·845	·824
2	175	142	·937	·930
5	,,	117	·897	·888
13	,,	90	·859	·842
2	155	130	·953	·951
5	,,	104	·911	·903
2	135	113	·960	·958
5	,,	87	·917	·911
2	115	95	·964	·962

The value of p_1/p_2 is roughly called r merely for the purpose of giving some notion of the amount of expansion we are dealing with.

I take it, as I did in 1873 when I first wrote on this subject, following Rankine, that it is the term in i that is the **most important wetting term** in the whole cycle. This is a term which is distinctly added on, and not contemplated in our generalisation over Problems I. and II. It may be written as above,

$$i\left(1 - \frac{t_2}{t_1}\frac{l_1}{l_2} - \frac{t_2}{l_2}\log.\frac{t_1}{t_2}\right)$$

Or in the handier form for calculation from the steam table

$$i\left(\frac{\psi_2 - \psi_1}{\psi_2 - \phi_2}\right) \quad . \quad . \quad . \quad . \quad . \quad . \quad . \quad . \quad . \quad . \quad . \quad (4)$$

if ψ is the entropy of a pound of steam and ϕ the entropy of a pound of water.

According to our generalisation, and, indeed, according to the next section, a quantity of water w_2 becomes after release $w_2\left(\frac{l_2}{l_3}\right)^\sigma$ and consequently the addition of water per stroke on account of adiabatic expansion is

$$i\left(\frac{l_2}{l_3}\right)^\sigma\left(\frac{\psi_2 - \psi_1}{\psi_2 - \phi_2}\right) \quad . \quad . \quad . \quad . \quad . \quad . \quad . \quad . \quad . \quad . \quad . \quad (5)$$

We particularly want to know how the above coefficient of i, the wetting term, depends upon r, the ratio of cut-off, and I have calculated its value in many cases. The result is very interesting. Taking r roughly as p_1/p_2 where p_1 is the initial pressure and p_2 the pressure at the end of the expansion. Taking θ_3 as 60° C. in a condensing, and as 100° C. in a non-condensing engine I find :—

Condensing engine.			Non-Condensing engine.		
r	p_1	Wetting coefficient.	r	p_1	Wetting coefficient.
2	203	·038	2	203	·041
	130	·043		130	·047
	79	·037		79	·040
	46	·035			
	25	·038			
5	203	·084	5	203	·093
	130	·083		130	·090
	79	·084		79	·090
	46	·085			
13	203	·129	13	203	·138
	130	·129			

On the whole, I am inclined to think that with great exactness we may say that **the wetting co-efficient** is independent of p_1, is nearly independent of p_3, and may be taken as being represented by $\frac{cr}{q+r}$ where c and q are constants in both condensing and non-condensing engines at all pressures. c seems to be about ·25 in non-condensing and ·224 in condensing engines.

3. Exhaust.

The following investigation is put forward with some diffidence. The action is irreversible, and I have no doubt that my assumption will be objected to. I am not ashamed to say that I have worried over it a great deal, and in some years have had much correspondence about it with friends who are acknowledged authorities on thermodynamics. It seems at first an easy problem. It has been given up as insoluble or too troublesome by some of my friends, and I cannot accept the too easy solutions of the others.

w_2 lb. of water and w_2' lb. of steam, W lb. altogether, in a non-conducting vessel of volume v, released to a condenser. Find the amount of water remaining, assuming no reverberatory back-flow. Neglect the volume of the water. At any instant let there be w lb. of water, so that

$$W = w + \frac{v}{u}$$

Just previously W was $W + \delta W$, w was $w + \delta w$, and temperature was $\theta + \delta\theta$. The intrinsic energy of the stuff now present is what it was, except that the volume was $u.\delta W$ less than it now is. Imagine the escape to take place

through a small hole gradually. We have W lb. of stuff, w of water, and a volume $v - u \,.\, \delta W$ of steam, expanding to the volume v doing the work $pu \,.\, \delta W$ in driving slowly the stuff δW out of the hole (the hole being led to by a long fine tube, perhaps); therefore its intrinsic energy is now less by this amount.

$w + \delta w$ of water had the intrinsic energy $(\theta + \delta\theta)(w + \delta w) J$ and $\frac{v - u \,.\, \delta W}{u + \delta u}$ lb. of steam had the intrinsic energy,

$$\{H + \delta H - (p + \delta p)(u + \delta u)/J\} \frac{v - u \,.\, \delta W}{u + \delta u}$$

Subtracting $\frac{pu\delta W}{J}$ from the sum of these and equating to the intrinsic energy now, or

$$w\theta + \left(H - \frac{pu}{J}\right)(W - w)$$

we get an equation which reduces to

$$\frac{dw}{d\theta} - \frac{w}{l} = -\kappa \frac{523 - \theta}{lut}$$

where $t = 273{\cdot}7 + \theta$. Letting $\frac{1}{{\cdot}695}$ be called σ we find

$$w = l^{-\sigma}\left\{ -\kappa \int \frac{523 - \theta}{ut} l^{\sigma - 1} \,.\, d\theta + C \right\}$$

where C is an arbitrary constant.

Taking values of θ from 125° C. to 90° C. I have plotted the values of $\frac{523 - \theta}{ut} l^{\sigma - 1}$ and found that it might be expressed with great accuracy as a function of θ.

$$\cdot 8829 - \cdot 02309\,\theta + \cdot 00021\,\theta^2,$$

which enables the integration to be performed easily.

Letting $w = w_2$ when $\theta = \theta_2$ it is easy to find C. Also let w_2/u_2 be called w_2^1 the weight of steam present before release; then the water w_3 present at the end of the release is

$$w_3 = w_2\left(\frac{l_2}{l_3}\right)^{\sigma} + w_2^1 l_3^{-\sigma} u_2 \{\cdot 8829(\theta_2 - \theta_3) - \cdot 01154(\theta_2^2 - \theta_3^2) + \cdot 00007(\theta_2^3 - \theta_3^3)\} \quad . \quad . \quad (6)$$

To see the effect of the amount of steam present when water and steam are released, I have worked out the values of the co-efficients in the following cases.

Comparison.

Steam expands from θ_2 to θ_3 **adiabatically**.
Steam is **released** from θ_2 to θ_3.
Compare the amounts of water at the end of the two operations.
In the first we have the fraction

$$\frac{\psi_3 - \psi_2}{\psi_3 - \phi_3} \quad . \quad . \quad . \quad . \quad . \quad . \quad . \quad . \quad . \quad . \quad . \quad . \quad (7)$$

In the second we have the fraction

$$l_3^{-\sigma} u_2 \{\cdot 8829(\theta_2 - \theta_3) - \cdot 01154(\theta_2^2 - \theta_3^2) + \cdot 00007(\theta_2^3 - \theta_3^3)\} \quad . \quad (8)$$

I do not see any easy method of comparison except by taking numerical examples:

θ_2	θ_3	Fractional amount of water remaining. After adiabatic expansion.	Fractional amount of water remaining. After release.
165	60	·1744	·0559
140	60	·1454	·0548
110	60	·1011	·0501
90	60	·0650	·0427
165	100	·1070	·0669
130	100	·0565	·0487
117	100	·0335	·0340

It seems, then, that when we release steam of even as high a pressure as 40 lbs. to the sq. inch, either to a condenser or to the atmosphere, if all that leaves the vessel is truly dry saturated steam, the water remaining is comparable with and may even approach in amount what would remain if the steam were adiabatically expanded to the lower temperature.

I have worked out the problem, because, although statements are often made in an off-hand manner concerning what happens on release, I believe that it has never been worked out before. And now that I have done it, I cannot make much present use of it, for, after all, the steam condensed in this way is not likely to remain in the cylinder. It is almost certainly carried off in the sudden rush of the uncondensed steam with which it is mechanically mixed, and I am going to neglect it altogether in the practical use to which I mean to put my results. Yet it must have an effect in cooling the valves and exhaust passage, and especially when the exhaust passage is also the steam passage will it tend to cause wetness. To make up for this neglect, I shall assume that the water due to the previous expansion remains in the cylinder. A more exact attempt to utilise my results would be to take both into account, multiplying each of them by a function of n which gets less as n gets greater. I have sometimes done so without great alteration to my general result, but with the feeling that there was a pretended exactness about the speculation much interfered with by my ignorance of the action at the valves.

It is to be noticed that the amount of water follows our old law, or $w_3 = w_2\left(\frac{l_2}{l_3}\right)^n$ if we neglect the wetting effect of the steam which is present with the water.

As I wish to have no more vagueness than I can help, let me in conclusion ask students to check the answers to **the following exercises**:—w_3 lb. at θ_3 increases to w_1 at θ_1 by (2), and diminishes to w_2 at θ_2 by adiabatic expansion, according to (3), putting $i = 0$; then further diminishes to $w_3{}^1$ at θ_3 by (8). What percentage loss of w occurs in the cycle? We know that this is the closest approximation we can make in a mathematical problem to what really occurs in a cylinder. If the cylinder were non-conducting, and there was thermal equilibrium just before and just after admission and during the expansion and release, and if we neglected the volume at admission and at release, and the volume of the steam at the beginning of the adiabatic operation

$$w_3{}^1 = w_3\left\{\frac{H_1 - \theta_3}{l_1}\right\}\int\left(1 - \frac{l_2}{l_2}\log.\frac{l_1}{l_2}\right)\left(\frac{l_2}{l_3}\right)^n \quad . \quad . \quad . \quad . \quad (9)$$

p_1	r	θ_1	θ_2	θ_3	Fractional evaporation.	Fractional condensation.
203	2	195	165	60	·007	—
	5	195	130	60	—	·005
	13	195	102	60	—	·014
	2	195	165	100	·000	—
	5	—	130	100	—	·010
	13	—	102	100	—	·020
130	2	175	143	60	·007	—
	5	—	117	60	—	·001
	13	—	90	60	—	·012
	2	175	143	100	—	·000
	5	—	117	100	—	·009
79	2	155	130	60	—	·000
	5	—	102	60	—	·008
	2	155	130	100	—	·003
	5	—	102	100	—	·012
46	2	135	113	60	·002	—
	5	—	87	60	—	·003
25	2	115	95	60	—	·002

These examples show that the result of Problem I. applies fairly well to the more exact conditions studied in Problem III. If we must take into account such small tendencies to evaporation or condensation as we here observe (which seem to me, however, somewhat due to the inaccuracy of our knowledge of latent heat) we may take it that there is always a slight tendency of w to increase or diminish at a rate proportional to its existing value.

401. I have worked out my problem exactly on certain assumptions. Other assumptions might be made and worked to, for in the irreversible operations of admission and exhaust there are various ways in which we may imagine the water to condense and vaporise. In release, for example, if the water is very thinly spread over a large surface, and especially if it is on a metal surface like the inside surface of a steam cylinder which has a steam jacket so that the metal is at slightly higher temperature than the water; the inner particles of water (touching the metal) may be warmer than the rest, and they may suddenly or explosively become steam, sending the other particles of water as water off into the outside space. There is reason to believe that this **explosive evaporation** does take place in some steam cylinders.

We might speculate on the case of the **water being in layers** of varying temperature as it is deposited and removed, but I have not yet been able to

frame an easy mathematical problem to illustrate such a state of things, and without such guidance I am afraid to speculate. It seems as if under such circumstances the water might have a drying action such as the metal has.

Any one who has worked in a heat laboratory must feel the impossibility of getting more than mere suggestion from one's general physical knowledge when dealing with this problem. We know a good deal about heat events that occur slowly, very little about those that **occur quickly.** Usually the surfaces of the metal are oily, but even in large modern engines in which oil is forbidden to be used in the cylinder we can see that **capillary actions** of a kind unknown to us must be acting to delay or accelerate evaporation and condensation. When it is almost impossible for us to realise the formation of particles of water in a dustless atmosphere; and we speak of this and other quite simple looking phenomena occurring with great rapidity in the cylinder, the surface of which is at quite different temperatures at different places, it is evident that what occurs inside the cylinder of a steam engine will not be well known to philosophers until long after cylinders of steam engines are only to be found in museums.

402. The Practical Problem. The above work gives me a little confidence in making the following assumptions. In future w will mean the total water present at the end of the exhaust.

1. (9) of Art. 400 may be taken as showing how the gain of water w per stroke depends on the value of w itself. We cannot use it in a less vague way than what is suggested below.

2. Any source of steady supply of heat to the cylinder, not contemplated in Problem I., such as superheating or mechanical drainage of water, may be spoken of as if it were a steam jacket effect. A negative steam jacket effect will represent the cooling conditions of an unjacketed cylinder.

3. **The drying effect** due to conductivity of the metal and the steam jacket studied in Problem II. will account for all the drying effects if we assume that in well arranged cylinders, ϵ, the surface emissivity is very small where there is no layer of water on the metal, and increases in proportion to the water present, but reaches a constant value if the water gets to be of considerable amount.

This applies only to the case in which the water w **coats the metal in a thin layer,** and it is evident that when there is such a thin layer the drying tendency must be ever so much greater than when the water lies in pockets. **Water in pockets** seems to be altogether an evil. It takes in heat during rise of temperature and gives it out during the fall, but has very little tendency to diminution from one cycle to another as it does so. Water in globules caused by oil is nearly but not quite such a great evil. Whereas the metal with a surface of small resistance to the passage of heat (great ϵ) although it acts evilly in much the same way, yet in doing so is always tending to make the cylinder dryer. A sort of equilibrium seems to be established by more of the metal getting a little wetter or dryer on its skin. I understand that a considerable amount of money has been spent in endeavouring to obtain a very non-conducting inside skin for cylinders; my investigation shows that such a skin would really increase the evils which it is intended to prevent.

The wetting term due to expansion is $ic'r/(9+r)$. In truth c' is not a constant; it is supposed to diminish at higher speeds because the condensed water has less time to settle down and is hurried out in release with the steam. c' is also less as the dimensions of the cylinder are greater, because of the greater average distance of the stuff from the walls in larger cylinders and passages. I shall call this term iR, and it is evident that without much alteration it will represent the wetting effect of any water which may cool the valves on release. For greater generality let us also include drying or wetting terms

such as are suggested by our problems. Thus we may take a small drying or wetting term proportional to w say βw.

Also a wetting term bi due to wet steam being supplied. b is probably greater with low pressure steam because of its less density causing more priming in the boiler ; also there is usually more surface exposed by the steam pipes per pound of steam supplied per hour. b is negative if there is superheating.

The steam jacket term which may also be called a drainage term, and which may be negative for unjacketed cylinders, is $\frac{aSev'}{n}$, e being the emissivity, and v' being the excess of the jacket temperature above the mean steam temperature inside ; S is the average surface. The metal drying term is $\frac{Se(\theta_1 - \theta_3)^2(g + h/r)}{\sqrt{n} + cn}$.

We might distinguish perhaps between what I call average surface for the steam jacket term and the other, but this is really not important. After a short run under steady conditions the drying and wetting balance one another so that

$$iR + ib = \beta w + \frac{ase}{n} v' + Se\phi^2 \frac{g + h/r}{\sqrt{n} + cn}$$

using ϕ for $\theta_1 - \theta_3$.

Now our notions about e take the mathematical shape $e = \frac{a'w/s}{1 + mw/s}$ where a' and m are constants. Students who delight in practical mathematics will find it interesting to take e such a function of w that it has a small constant value when $w = o$; that it increases proportionately to w when w is small ; reaches a maximum for a certain value of w and if w is greater than this, e slowly lessens again. I dare not venture here to give the answer which I obtain when I use this more complex function, and indeed in what follows I shall confine my attention to rather dry cylinders.

403. If a cylinder is fairly dry, the effect of m is insignificant, and calling it o we may take

$$i(R + b) = w\left\{\beta + \frac{aa^1r^1}{n} + a'\phi^2 \frac{g + h/r}{\sqrt{n} + cn}\right\}$$

Using the value of w which this gives us in Art. 230 we find, taking $H_1 - \frac{1}{2}(\theta_1 + \theta_3)$ as practically constant

$$y = \left(a^1 \frac{g + h/r}{\sqrt{n} + cn} + 1\right)(\theta_1 - \theta_3) \cdot \frac{c^1r/(g + r) + b}{\beta + \frac{aa^1r^1}{n} + \frac{a^1\phi^2(g + h/r)}{\sqrt{n} + cn}} + A\frac{r}{nd}$$

The student must not imagine that I propose this as a working formula. There is no probability of our obtaining a cut and dried formula of general application. I have asked students to follow me in its working out because this sort of study will clear their ideas, and putting our notions down quantitatively on paper gives us a better idea of their real value. We can divide up this formula for a rather dry cylinder into

$$y = \frac{(F + 1)\phi}{\beta + J + F\phi^2}R + L.$$

L is the leakage term, being proportional to $\frac{r}{nd}$; R is also nearly proportional to r, but if the steam is supplied in a dry state or slightly superheated as b may be negative, R may also be regarded as proportional to $r -$ a constant. RF is the predominant term in the numerator and this is a linear function of r, increasing as r increases.

S gets less as the cylinder is larger, because L does so, and we saw that R also gets less as the cylinder gets larger. L is inversely proportional to n, and F the predominant term in the numerator also gets less as n increases, being inversely proportional to n in a dry cylinder and inversely proportional to $\sqrt{n}$ in a wet cylinder. As for the denominator of the first part of y, it consists of terms which indicate the three tendencies to drying. The Jacket term J is altogether good. The Water Film term F, we notice, does harm on the whole; we see it in the numerator where its harmful effect is shown; we see it in the denominator, and there its good effect is proportional to the square of the range of temperature, whereas its bad effect is only proportional to the temperature range.

If I am right, as soon as steam condenses it ought to be induced to drain away quickly from a cylinder. This serves two purposes: first there is a diminution of the altogether evil presence of heat-absorbing water; second there is the leaving behind it of its latent heat. The conditions inside a cylinder are critical. A little heat given by drainage or steam jacket or superheating may make all the difference between a wet cylinder with great loss and a dry cylinder with little loss. In my opinion, a metal surface dry at the end of the exhaust will take up but little heat and cause little loss, and the usual notion that we often have it has been invented by academic persons whose calculations (see Art. 209) are of no value unless this assumption is made.

INDEX

INDEX

The References are to Pages

A

Absolute temperature, 303
Acceleration, 109, 122, 538–545
  of piston, 122, 538–545
Account, energy, chap. 16
Accumulator, boiler, 208
Accumulators, electric, 263–4
Acid, carbonic, 332
Ackroyd and Hornsby's oil engine, 459, 464–5
Acme gas engine, 455
Acoustics, study of, 3
Action, electro-chemical, 206
Adiabatic expansion, chap. 23; 624
  flow of steam and gases, 604–611
Admiralty ferule, 205
Admission, 80, 623
Advance of valve, 128
Air, entropy of, 243, 346, 351
  in condenser, 157
  in water, 560
  to furnace, 210
  engine,
    Joule's, 343
  lock, 230
  pump, 156
  vessel, 164
Aladdin, 9
Alcohol, 319
Algebra, signs in, 237
Allan link motion, 137, 141, 498
Alteration of load on engine, 289
Ångstrom gear, 144
Angular advance, 128
Animal machine, the, 4
Area of indicator diagram, 247
Areas of irregular figures, 246
Arithmetical calculations, chap. 15
Armington and Sim's valve motion, 142
Artificial circulation in boilers, 253
Ash in coal, 418
Assumption, wrong, 116
Atkinson engines, 448–9
Atkinson's scavenger, 452
Atmosphere, one, 237
Automatic stoking, 211–2
Auxiliary engines, 138
  pump, 158, 163
Average breadth, 94
  pressure, 97
Averages, 246–8
Axle of locomotives, crank, 69
Ayrton and Perry's gas engine paper, 474

B

Babcock and Wilcox boiler, 227, 235, 236
Backlash, 30
Back-pressure, 75, 81
Balance piston, 52
Balancing of engines, 8–14, 28, chap. 29
  locomotives, 30, 69, 71, 535–7
Bars, fire, 154, 202, 206
Bar stay, 204
Beam engines, 9
Beau de Rochas, 445
Belleville boiler, 227
Belt driving, 31
Berthelot, 441
Best cut-off, 77, 81, 294–301
Bicycle, resistance of, 263
Binary vapour engine, 260
Bischoff engine, 443
Bisulphide of carbon, 319
Bituminous coal, 418
Blaine's paper on governors, 176
Block, sliding of in link, 499, 529
  sealing or fitting, 182
  thrust, 61
Boiler, Cornish, 11–13
  covering of, 190
  deposit, 225–6
  efficiency of, chap. 26
  experiments, Newcastle, 435
  Lancashire, chaps. 11–13
  locomotive, 217

Boiler, multitubular, 212, 215, 216, chap. 14
pitting, 159
requirements of modern, 177
seating, 211
shell, holes in, 181
shop methods, 200
spherical, 196
stay, 179, 204, 205
storage, 208
strength of, chap. 12
tests, 177
Thorneycroft's, 227, 232, 233
tube, field, 217, 425
valves, vacuum on, 188
Wigan, experiments on, 429
Wilcox and Babcock, 227, 235-6
Boilers, 8, chaps. 11-14
artificial circulation in, 153
breathing of, 181, 207
care of, 195
copper in, 201
corrosion in, 206
deposit in, 225-6
hogging in, 181, 207
improvement in manufacture of, 201
marine cylindrical, 219-225
scale in, 225-6
size and evaporation of, 177
steel in, 202
straining in, 181, 207
testing, 221
tubes in, 216, 217
water level in, 185, 188
water tube, 226, 236
Bourdon pressure gauge, 185, 189
Box clack, 190
stuffing, 24
Brake power, 75, 256, 270-4
Branca's engine, 6
Brayton engine, 444, 474
Breathing of boilers, 181, 207
Brotherhood engine, 55
Brown's marine governor, 176
Brown's shifting gear, 143
Bull engine, fig. 21
Bunsen, 440, 441
Burstall's experiments on gas engines, 455-7

C

Caking coal, 418
Calculation, importance of, 1-14
numerical, chap. 15
Calculus of differences, 239
Callendar, Prof., 385, 389, 392, 561, 593, 618-620
Calorific power, 405-422
Capacities and latent heats, 336, 565-569
Capillarity, 560
Carbonic acid, 332
Carbon, consumption of, 404
Carbon, disulphide of, 319
Care of boilers, 195
Carnot's cycle, 347-351
Car, work done on tram-, 247
Cast iron pipes, 201
Caulking, 200
Centrifugal force, 28, 169
Change of temperature in cylinder, 386
Characteristics of fluids, 331, 563
Chemical action, electro-, 206
symbols, 402-405
Chimneys, 228
Cholera, 18
Circulating pumps, 163
Circulation in boilers, artificial, 153
water, 217
Civilisation, 11
Clack box, 190
Clark on cylinder condensation, 375
Clark's book on engines and boilers, 429-436
Clausius, virial, 558
Clearance, 30, 40, 97, 244, 293
in gas engines, 447, 450
Clerk, 440, 449, 453
Clerk's experiments on gas engines, 440
Coal, 416-421
ash in, 418
consumption, 98
combustion of, 209-210
getting exhausted, 10
smoke, Welsh and other, 209
tester, 415
and work, 257
Welsh, 418
Cocks, drain, 52
test, 185
Coke, 418, 421
Collapse of flues, 201-2
Collision, energy wasted in, 599, 600
Collision of fluid jets, chap. 34
Colonel English, 268
Combination of motions, 488-492
Combustion, products of, 408
specific heat of products of, 408
rapidity of, in gas engine, 439, 479
and fuel, chap. 25
and smoke, 209, 210
temperature of, 415
Comparison of methods of regulation, 290
Complete differential, 567-8
Complexity of large engines, 146-9
Compound locomotive, 71
Compounding, 115, 379-380
Compression, 39, 80
in gas engines, 146-9
superheating by, 618
Condensation in cylinders, 78, 81, 100, 116, 289, chaps. 24, 35
Condensers, chap. 9
evaporative, 160
heat to, 156

Condensers, jet, 154, 160
surface, 154, 158, 593
Condensing apparatus, Joule's, 425
and iron-condensing engines, 271–2
Conditions of evaporation, static and kinetic, 560
of expansion, kinetic, 561
Conductivity of metal of cylinder, 381–9, 621–3
Connecting rod, 26, 43
best form, 547, 549
angularity of, 118
strength of, 113
Construction, for crank and connecting rod, Müller's, 488
Consumption of coal, 98
water, 99
Convection, 424, chap. 33
Copper in boilers, 201
Corliss gear, 176, fig. 22
Cornish boiler, 11–13
Corrosion in boilers, 206
Corrugated flues, 181, 203, 220
Cost of energy, 252
Cotterill's, Prof., formula, 392
Coupled engines, 33
Covering of boiler, 190
Crank axle of locomotives, 69
marine engine, 58
motion, parallelogram of, 489
pin, force at, 113
turning moment, 32
Cranks, three, 33
Crompton, 22, 253
Crosby indicator, fig. 73
Cross head, 25, 537
force at, 109
Crossley's Otto gas engine, 450–457
Curve, saturation, 102
Curved surfaces, pressure on, 197
Cut-off, 79
independent, 504
best, 77, 81, 294–301
quick, 79
valve, 174
Meyer's independent, 504
Cycle, Carnot's, 347–351
temperature cycle in cylinders, 113, 307
Rankine's, 241, 320–3, 365–73
Cylinder, 19, 36, 41
body, lining and, figs. 36, 39, 40
cover, fig. 36
condensation, 78, 81, 102, chaps. 24, 35
effective pressure in, 286
ends, manhole in, figs. 36, 38, 41
evaporation in, 102
heat exchange in, 108
inside locomotive, 67
instability inside, 378
Joy's assistant, 149
momentum, 149
Cylinder, outside, locomotive, 67
three, engine, 79
water in, 18, 328, 370–3, chap. 35
Cylinders, examples of, fig. 134
Cylindric vessel, storage in, 198
marine boilers, 219–225

D

Damper, 211
Dead point, 32, 33
Density of steam, 240, 242, 571–2
of water, 320–3, 327
Deposit boiler, 225–6
from feed, 155
in boilers, 155
Depth and temperature, 381
hydraulic mean, 229, 428, 429, 433, 591
Diagram, crank effort, 111, 551
hypothetical, chap. 17
indicator, 39, 40
area of, 247
Macfarlane Gray, 107
oval valve, 487, 510
$t\ \phi$, 107
Theta Phi, 107
Zeuner's valve, 133, 482
Diesel oil engine, 466, 473–4
Differences, calculus of, 239
Differentiation, partial, 564
Diffusion in fluids, 585
Direct acting steam engine, 18
driving, 31
Displacement, piston, chap. 6
Dissociation, 332, 441, 554
Distribution of steam, chap. 7
Dog stay, 205
Dome, 182
Donkey engines, 33
Donkin's boiler experiments, 425–7
Donkin's book on gas engines, 455
Door, fire, fig. 224
Double beat valve, 183, 186
Double ported valve, 52, 148
Dowson gas, 260, 334, 422
tester, 415
Dow steam turbine, 257
Drainage, good effects of, 378
Drain cocks, 52
Draught, 211, 228, 231
chimney, 228
forced, 230
Howden's, 231
Drawing, wire, 79, 80, 93
Drawings lent by Mr. Pickersgill, figs. 58–64
Drill, rock, 56
Drilling and punching, 200
Driving, belt, 31
direct, 31
rope, 31, 168

Driving wheel of locomotive, 69
Drop to receiver, 115
Drying effect of throttling, 354
metal of cylinder, 621–3
Dryness of steam, 16, 183, 353–8, 580
Dunlop governor, 176

E

Eccentric, chap. 7
is a crank, 125
Eccentrics of link, 152
Economiser, 153, 212
Green's, 212
Edinburgh, temperature experiments, 384
Effective horse power, 75, 256, 270–4
Efficiencies of engines, chap. 16; 251, 258
steam engines, 3, 82, 83
Efficiency, mechanical, 256
of boiler, chap. 26
of firebox, 423, 427
of flues, 424–438, chap. 33
of furnace, 423–7
of gas engine, 260, 281, 447–9, 454, 457, 468–9, 473
of locomotive, 258
of mechanism of engines, 102
of oil engines, 462, 466
of power transmission, 283
ratio, 99
steam, 256, 290, 296–301
Ejectors, 617
Elasticities, 563, 567, 571
Electric accumulator, 263–4
cabs, 264
engines, efficiency, 4
Lighting Co., Hove, 252
power, 104, 275, 283
traction and lighting engines, 280
units of power and energy, 250
Electro-chemical action, 206
Emery, 299
Emissivity for heat, 328
Ends, manhole in cylinder, figs. 36, 38, 41
Energy account, chap. 16
how disposed of, 103–5
intrinsic, 337
of steam, 353
and money, 252
nature's stores of, 1
of coal, 3
of a gas, 555–6
of earth's rotation, 2
of the sun, 3
wasted in collision, 599–600
work and heat, chap. 21
Entropy, chaps. 22 23
of air, 243, 346, 351
analogy, art. 199
curves, 326, 470, chap. 23
of steam, 244, 326, 346, chap. 23
Entropy of superheated steam, 352
and temperature, 107, 337, 348, 470
of water, 243
Equilibrium valve, 183, 186
Equivalent eccentric in link motion, chap. 28
Errors, indicator, 87, 90
Ether, 319
Evaporation condenser, 160
and capillarity, 560
from Lancashire boiler, 177
standard, 250, 411
Evaporative power, necessary losses in, 408
condenser, 160
Examples of cylinders, fig. 134
Exchange of heat between steam and cylinder walls, 107–8, 440
Exercises in mensuration, 244
Exhaust, 626
Exhaustion of coal, 10
Exhaust passage, 37
steam injector, 616
Expansion, adiabatic, chap. 23; 624
in boilers, 177
of boilers, 181, 207
in gas engine, 307
of gases, 306, chap. 20
by heat, 305
incomplete, 364
law of, 74, 105, 307, 329
of steam, law of, 285, 362
successive, 79, 378–80
under kinetic conditions, 561
valve (Meyer), 174, 504
value of, chap. 3; 294–301
Experimental results, 391–400, chap. 24
work, 104
Experiments, Burstall's on gas engines, 455–7
Donkin's boiler, 425–7
Newcastle boiler, 435

F

Factor, power or load, 253, 256, 279, 284
Fairfield engines, figs. 6, 8, 9, 11; 30, 31, 36–39, 41, 48, 51, 52
Fans, 230
Feed, chap. 9
deposit from, 155
heating, 153, 435
pipe, 183, 184
purifier, 226
regulation, 227
tank, 164
valve, 190
water heater, 212
Ferule, Admiralty, 205
Field boiler tube, 217, 425
Figures, areas of irregular, 246

Fink gear, 150
Stewart, valve motion, 137
Finsbury College exercises on gas engines, 470–3
Fire bars, figs. 154, 202, 206
box efficiency, 423, 427
door, fig. 224
Fitting block, 182
Flat parts in boilers, 179, 204, 205
Flow of steam, 373, 604–611
and gases, adiabatic, 604–611
Fluctuation of speed, 111
Flue rings, 202
Flues, 178, 191
corrugated, 181, 203, 220
efficiency of, 424–438, chap. 33
friction in, 229, 585–7, 595
strength of, 201–2
theory of, chap. 33
Fluid, jets of, chap. 34
Fluids, how they give up heat and momentum, chap. 33
Fly wheels, 31, 33, 111, chap. 10
on board ship, 176
Force, work done by varying, 247
Forced draught, 177, 230
Force pump, 158
Forces in engine, 32, 109, 113, chap. 29
Formulæ, calculation from, chap. 15
for properties of steam, 318–328
Foundations, 31
Fourier series, 113, 386, 511–4, 530
Four-valve engines, 81
Frame plates of locomotive, 68
relief, 52, 148
strength of, 113
Frames of engines, 27, 53, 54, 57, 113
French locomotive experiments, 430–433
Friction in engines, 75, 256, 270–5, 295
fluids, 559
flues, 229, 585–7, 595
indicators, 92
of ship's skin, 267
Fuel, chap. 25
Furnace, efficiency of, 423, 427
supply of air to, 210
Fusible plug, 188

G

Galloway tubes, 178
Gas, Dowson, 251, 422, 439
Gas engine, 4, chap. 27
Acme, 455
diagram, temperatures, 307, 339
mixture, 332–5
paper, Ayrton and Perry's, 474
Gas engines,
Acme, 455
Atkinson, 448–9
Bischoff, 443
Brayton, 444
Burstall's experiments on, 455–7
Gas engines,
Burt, 455
Crossley, 445–457
efficiency of, 260–281
Griffin, 454
Hugon, 443
Lenoir, 422
Otto and Langen, free piston, 443
Otto silent, 444–7
Stockport, 454
Tangye, 453–4
Wells, 452
Gaseous fuel, 421
Gases, capacity for heat of, 310
expansion of, 306, chap. 20
kinetic theory of, chap. 30
properties of, chap. 20
Gas tester, 415
Gately and Kletch, 298
Gauge, Bourdon pressure, 185, 189
glass, 188
railway, 67
Gear, Ångstrom, 144
Brown's shifting, 143
valve, 36, chap. 8
Corliss, 176, fig. 22
Gearing from engine, 31
Giants, 1
Girder stay, 205
Glass gauge, 188
Gooch link motion, 137, 141, 495–6, 527, 530
Governing by throttle and cut-off, 290–1
Governors, chap. 10
Armington and Sims, 142
Blaine's papers on, 176
Brown's marine, 176
Hartnell, 167
theory of, 169, 174
Watt, 166
Graphical slide valve calculations, 133, chap. 28
Gray, Macfarlane, 332, 488, 558, 582
Gray's, Macfarlane, diagram, 107
Green's economiser, 212
Griffin gas engine, 454, 463
Griffith's experiments, 573
Grooving in boilers, 159, 206
Grover, 442
Guides, 27, 31
Guns, 6
Gyrostats, 176

H

Hackworth's gear, 143, 502, 514
Halpin's system of storage, 208
Hammer, water, 184
Harmonic valve diagram, 508–9
analysis, 513, 527–8
Harrison, 547, 549
Hartnell governor, 167

Heat and work, chap. 21
capacity of gases, 310
coefficients, 336
emissivity for, 328
engines, waste in, 3, 103
exchange in cylinder, 108
expansion by, 305
latent, 304, 310
measurement of, 308
momentum carried by fluids, chap. 33
reception in gas engines, 338–340, 466, 472, 480
resistance, 591-594
specific, 309–314, 565–9, 570–1
of gases, 332
of products of combustion, 408
of stuff in a gas engine, 439
of superheated steam, chap. 17
of steam, total, 99
Heater, feed water, 212
Heating feed water, 153, 435
in boilers, chap. 13
surface in boilers, 429
Heats, latent and capacities, 336, 565–9
Heaviside operators, 387
Hero of Alexandria's engine, 6
Hirn, 440
History of steam engine, 6
Hogging in boilers, 181, 207
Holes in boiler shell, 181, 183
Hornsby Ackroyd oil engine, 459, 464–5
Horse-power brake, 75, 256, 270–4
indicated, 95, 97
hour, 250
Hove Electric Lighting Co., 253
Howden's draught, 231
Hugon gas engine, 443
Humphrey Potter, 80
Hunting in governors, 173
Hydraulic mean depth, 229, 428, 429, 433, 591
power stations, 33
transmission, 282
test of boilers, 177
Hydrogen, combustion of, 403
in coal, 418
Hyperbolic logarithms, 243, 288
Hypothetical diagram, chap. 17

I

Ignition in oil engines, 459
rapidity of, in gas engines, 439
tube, 450–1
Improvements in gas engines, 434
in manufacture of boilers, 201
Increase, rate of, 239
Independent cut-off valve, 174, 504
Indicated and brake power, 75, 270–4
horse-power, 95, 97
steam, 100
Indicator, Crosby, fig. 73
diagram, 39, 40
area of, 247
errors, 87, 90
Perry's, 116
Richards', 90
vibrations of, 92
Indicators, chaps. 4, 5
friction in, 92
Inequality of distribution of steam, 510
Inertia of moving parts, chap. 29
Initial condensation, 78, 81, 101, chaps. 24, 35
Injector, 161
theory of, 611–617
Inside cylinder locomotive, 67
Instability inside cylinder, 378
Intrinsic energy, 337
of steam, 353
Isherwood's experiments, 435
Isochronism in governors, 171

J

Jacket, 18, 116, fig. 134
Jacketing, 369, 376–7, 380
Jet pump, Thomson's, 601–4
Jets of fluid, chap. 34
Joints, riveted, 178, 180, 199–202
Joule's air engine, 343
condensing apparatus, 425
Joy gear, 144, 516, 524–5
Joy's assistant cylinder, 149

K

Kelvin's, Lord, suggestion for warming buildings, 342
Kettle, Watt and water in, 14
Kinetic conditions of evaporation, 561
expansion, 561
Kinetic and static conditions of evaporation, 560
theory of gases, chap. 30
Kletch, Gately and, 298
Knocking, 30, 114, 115

L

Lancashire boiler, chaps. 11–13
Lanchester's starting gear, 453
Langen engine, Otto and, 443
Lap, 129
Latent heat, 304, 310
of steam, 99, 571
heats and capacities, 336, 565–9
Laval turbine, 63, 64, 257

Law of expansion, 105
of steam, 285, 362
second law of thermodynamics, 340–2, 568, chap. 31
Willans, 82, 83, 104, 158, 278, 290, 292
of adiabatic expansion, 373
Lead, alteration of, in valve motions, 138
Leakage, 389-391
past valve, 81, 289
Lenoir engine, 442
Level, water, in boilers, 185, 188
Lever, reversing, 76
safety valve, 192
Lighting Co., Hove Electric, 253
Lignite, 417
Lime, sulphate of, 155, 225-6
Linear law, 270-281
Liner and cylinder body, packing between, figs. 36, 39, 40
Link, Allan, 137, 141, 498
eccentrics of, 152
Gooch, 137, 141, 495, 496, 527, 530
motions, chaps. 8, 28
motion, swinging, 141
skeleton drawings, 499, 500, 511, 530
Stephenson's, 70, 137, 140, 174, 496, 530
sliding of block in, 499, 529
theory of, chap. 28
Load on engine, alteration of, 289
governor, 172
or power factor, 253, 256, 279-284
Locker, air, 230
Locomotive balancing, 30, 69, 71, 535–7
boiler, 217
compound, 71
description of, 67, 71
efficiency, 258
experiments, French, 430–433
feed regulator, 71
frame plates of, 68
inside cylinder, 67
outside cylinder, 67
reversing gear, 70
slide valve, 129
speed of, 535
valve gear, 70
Logarithms, chap. 15
Napierian, 243, 288
Loring and Emery, 299
Losses in evaporative power, necessary, 408
Low water safety valve, 191

M

Macfarlane Gray on specific heat, 558, 582
Gray's construction, 488
diagram, 107
Machine, the animal, 4
Management of boilers, 195
Manchester students, 587
Manhole, 183
in cylinder ends, figs. 36, 38, 41
Marine boilers, cylindric, 219-225
governor, 176
propulsion, 265–270
Marshall gear, 143, 502, 515, 523
Maxwell's theorem, 555–7
Mean hydraulic depth, 229, 428, 429, 433, 591
Measurement of heat, 308
Mechanical efficiency, 256
equivalent of heat, 573
stoking, 211-2
Mechanism of engines, efficiency of, 102
Mensuration, exercises in, 244
Metal of cylinder, drying effects of, 621-3
Methods, boiler shop, 200
Meyer, independent cut-off valve, 174, 504
Missing water, 78, 81, 100, 116, 289, 295, 297–300, chap. 29
experiment results, 391–400
Mixing of fluids, 585
Mixture, gas engine, 332-5
Models, 118, 127
tank experiments with ship's, 268
Modern boiler requirements, 177
Moment, turning, 32
Momentum and heat given up by fluids, chap. 33
cylinder, 149
Money and energy, 252
Motion, Allan's link, 137, 141, 498
Armington and Sims' valve, 142
Gooch link, 137, 141, 495–6, 527, 530
Swinging link, 141
link, skeleton drawings of, 499, 500, 511, 530
of piston, 537–545
parallelogram of crank, 489
reciprocating, 118
simple harmonic, 123, 481–6
Stephenson link, 70, 137, 140, 174, 496, 530
Stewart-Fink valve, 137
Tappet, 176
Motions, combination of, 488–492
parallel, 9
Müller's construction, 488
Multitubular boiler, 212

N

Napierian logarithms, 243, 288
Napier's experiment on flowing steam, 609
Natural gas, 422
Nature's stores of energy, 1

Naylor safety valve, 194
Necessary losses in evaporative power, 408
Newcastle boiler experiments, 435
Newcomen's engine, 6, 9
Nicolson, Callendar and, 385, 389, 392, 561, 593
Non-condensing engines, Willan's trials, 289, 295, 299
Nuisances, 12
Numerical calculations, chap. 15

O

Octaves, creation of, 517–526
in harmonic motions, 507-531
in piston motion, 540
Oil as fuel, 421
behaviour of, 459
Oil engine efficiency, 462–466
Oil engines, Brayton, 444
Britannia, 466
Campbell, 466
Crossley, 466
Diesel, 473–4
Hornsby Ackroyd, 464-5
Priestman, 458–64, 466
Wells, 466
Weyman, 466
Oil gas, 421
Operators, Heaviside, 387
Ordinary steam engine, 18
Orifices, flow of steam and gas from, 604–611
Otto and Langen engine, 443
Otto gas engines, 260, 445
Outside cylinder locomotives, 67
lap, 129
Oval valve diagram, 487, 510

P

Packing, 24
between liner and cylinder body, figs. 36, 39, 40
Paper, squared, 315
on governor, Blaine's, 176
Papers, Ayrton and Perry on gas engines, 474
Parallel motions, 9
Parallelogram of crank motions, 489
Parson's steam turbine, 256
turbine, 8, 65, 66, 599
"Turbinia," 8, 65
Partial differentiation, 564
Passage, exhaust, 37
Pass valve, 51
Peabody's thermodynamics, 614
Peat, 416
Performance, engine, 258
Perry, Ayrton and, 474–479
Perry's indicator, 117, 388
Petroleum, 421
Phi Theta diagram, 107
Pickersgill, drawings lent by Mr., figs. 58–64
Pipes, feed, 183, 184
steam, 22, 183
strength of, 201
Piston, figs. 23-36
acceleration, 122, 538–545
balance, 52
displacement, chap. 6
motion of, 537–545
octave in, 540
packing, figs. 23–31
pressure on, 34
rod, 34, 52
valve, 148, fig. 134
velocity, 122
Pitting in boilers, 159
Planimeter, 94
Plates, frame, of locomotive, 68
Plug, fusible, 188
Point, dead, 32, 83
Potter, Humphrey, 80
Power, chap. 16
brake, 75, 256, 270–4
electric, 104, 275, 283
and energy, electrical units, 250
factor, effect of, 253, 256, 279–284
in governors, 171
hour, horse, 250
indicated horse, 95–97
and brake, 75, 270–4
or load factor, 253, 256, 279, 284
necessary losses in evaporative, 408
reserve, in boilers, 226
stations, hydraulic, 33
transmission, 282–3
and water, 83
water, 261
Pressure, average, 74, 94
back, 75, 81
on curved surfaces, 197
in cylinder, effective, 286
of fluids, 15, 34, 336
Pressure gauge, Bourdon, 185, 189
on piston, 34
and temperature of steam, 14, 320–3
volume, temperature relations in gases, 331
and volume of saturated steam, 318–24
Pressures usual in engines, 16
Price of energy, 4
of engines, 252
paid for energy, 252
Priestman gas engine, 458–464
oil engine, 458-64, 466
Priming, 16-18, 183

Products of combustion, 408
specific heat of, 408
Propeller, 62
shafts, 59–62
Properties of gases, chap. 20
steam, chap. 19
table of, 320-3
Propulsion of ships, 265–270
by steam jets, 599
Pump, air and others, 156–164
auxiliary, fig. 21A ; 158, 163
force, 156
jet, 601–4
Worthington's, fig. 21A
Pumping, figs. 21, 21A
Punching and drilling, 200
Purifier, water, 226

R

Racing of screw, 176
Radial valve gears, 137, 501–504
Radiation in furnace, 211
Railway gauge, 67
Ramsay, 575
Ramsay and Young's experiments, 584
Ramsbottom safety valve, 193
Rankine cycle, 241, 320–3, 365–373
formula, 319
Rank, the unit of entropy, 345
Rapidity of ignition in gas engines, 439
Rate of increase, 239
of reception of heat, 338–340, 466, 472, 480
Ratio, efficiency, 99
of cut-off, 242, 287
expansion, best, 76–7, 294–301
specific heats in gases, 557
Rayleigh's sound, Lord, 13
suggestion, Lord, 366
Receiver in compound engines, drop to, 115
Reciprocating, evils of, 8–14
motion, 118
Reflecting indicator, 117
Refuse, town, 261
Regenerator, Stirling's, 343
Regnault, 99, chap. 19
Regulation and economy, exercises on, 287
valve, 71, 183, 186
by varying pressure, 82, 83
Regulator, feed, 227
for locomotives, 71
Relay governor, 174
Release, 80
Relief frames, 52, 148
valves, fig. 36
Requirements of modern boilers, 177
Reserve power in boilers, 226
Resistance of bicycle, 263
of flues, frictional, 229
Resistance of ships, 265, 270
of vehicles, 262–4
to heat, 591–4
train, 262
Results, experimental, on missing water, 391, 400
Reversed heat engine, Kelvin's, 342
Reversing gear, chap. 8
lever, locomotive, 70
Reynolds, Prof. Osborne, 116, 587, 594–597, 598, and in preface
Richard's indicator, 90
Rings of flues, 202
Riveted joints, 198–202
Rivets, 198
Robinson's experiments on oils, 462
Robinson and Sankey, balancing, 552
Rochas, Beau de, 405
Rock drill, 56
Rod, piston, 34–52
Rods, tail, 52
driving, 31, 168
transmission, 283
Rotating parts, balancing of, 533–7

S

Safety valve, 189, 191–5
lever, 192
Ramsbottom, 193
low water, 191
Sankey and Robinson, 552
Saturation curve, 102
Savery's engine, 6
Scale in boilers, 225–6
Scavenger, Atkinson's, 452
Scavenging in gas engines, 442, 451–2
Schmidt's engine, superheating, 376
Screw, 62
racing of, 176
steamers, twin, 59
Seating or fitting block, 182
boiler, 211
Seat, valve, fig. 134
Sea water, deposit from, 155
Second law of thermodynamics, 340–2, 568, chap. 31
Self starter, Clerk's, 453
Seller's injector, experiments on, 615
Separator, 183
steam, 16
Series, Fourier, 386, 511–514, 530
Setting of valves, 149
Shell, holes in boiler, 181
strength of, 196
Shifting gear, Brown's, 143
Ship, flywheels on board, 176
models, experiments with, 268
propulsion, 265–270
resistance, 265, 270
Ships, skin friction of, 267
vibrations of, 13

Shop methods, boiler, 200
Signs in algebra, 237
Simple harmonic motion, 123, 481–486
Sims and Armington's governor, 142
valve gear, 142
Sine function, 481, 483
Single-acting engines, 30, 114
Size and evaporation of boilers, 177
Skeleton drawings of link motions, 449, 500, 511, 530
Slides, 25, 31
Slide valve, 36, 39, chap. 7
double ported, 52
valves in locomotives, 129
Sliding of block in link, 449, 529
Slippers, 25, 31
Smoke, 209–210, 419
of Welsh and other coals, 209
nuisance, 12
Sound, Rayleigh's and Tyndall's, 13
Specific heat, 309–314, 565–9, 570–1
of products of combustion, 408
of stuff in gas engine, 439
Superheated steam, 332, 569, 580–4
Specific heats of gases, 332
Macfarlane Gray's, 558, 582
ratio of, in gases, 557
Speed, effect of, 380–1
fluctuation, 111
of locomotives, 535
Spherical boiler, 196
Spring in governor, 172
Squared paper, 315
Stage, expansion, 79
Standard evaporation, 250, 411
for steam engines, Willans', 368
Starting engine, 138
gear for gas engines, 453
valves, 51
Static and kinetic conditions of evaporation and expansion, 560
Stationary engines, 20, 35, 53, 54
Station, hydraulic power, 33
Stay bar, 204
boiler, 179, 204, 205
dog, 205
girder, 205
tube, 205
Steam, density of, 240, 242, 571–2
distribution of, chap. 7.
efficiency of, 256, 290, 296–301
engine, direct acting, 18
engine efficiencies, 3, 82, 83
history of, 6
ordinary, 18
entropy of, 244, 326, 346, chap. 23
flow, velocity of, 373, 605, 611
formulæ for properties of, 318–328
and gas, flow from orifices, 604–611
indicated, chap. 5
intrinsic energy of, 353
jacket, 18, fig. 36
jets, propulsion by, 599
Steam, law of expansion of, 76, 105, 307, 329
Napier's experiments on flowing, 609
pipes, 183, 221
properties of, 238–244, chap. 19
pump, Worthington's, fig. 21A; 158
superheated, 17, 332, chap. 32
entropy of, 352
tables of properties of, 320–323
temperature and pressure of, 14
total heat of, 99
traps, 17
turbine, Dow, 257
De Laval, 63, 64, 257
Parson's, 8, 65, 66
wetness of, 183, 353–7, 580
Steel in boilers, 202
Stephenson's link motion, 70, 137, 140, 174, 496, 530
Stewart Fink valve motion, 137
Stirling's regenerator, 343
Stockport gas engine, 454
Stoking, 209–212
automatic, 211–2
Stoney, Dr., 558
Stop valves, 184, 185, 221
Storage, boiler, 208
in cylindrical vessels, 198
Halpin's system of, 208
Store of energy, nature's, 1
Strachey, 512
Straining in boilers, 181, 207
Strength of boiler, chap. 12
connecting rod, 113
flues, 201–2
frame, 113
parts of engines, 113
pipes, 201
riveted joints, 199
shell at holes, 181, 183
thin shells, 196
tubes, 196, 203
Stresses due to expansion of boilers, 181–207
in parts of engines, 113
Students, Manchester, 587
Stud stay, 204
Stuffing box, 24, figs. 7, 9, 37
Successive expansion, 79, 379–380
Suggested boiler, 457
Suggestion, Lord Kelvin's, for warming buildings, 342
Lord Rayleigh's, 366
Sulphate of lime, 155, 225–6
Sun's energy, 3
Surface condenser, 158, 593
heating, in boilers, 429
Surfaces, pressure on curved, 197
Superheated steam, 352, chap. 17
Superheating, 370, 376–7, 619
Symbols, chemical, 402–405
System of draught, Howden's, 231

T

Tables of properties of steam, 320–3
Tail rods, 52
Tangye gas engines, 433–4
Tank, experimental, with ship models, 268
Tappet motion, 176
Temperature, absolute, 303
  change of, in cylinder, 386
  of combustion, 415
  cycle in cylinders, 113, 307
  and depth, 381–9
    entropy, 107
  errors in, 238
  experiments, Edinburgh, 384
  on gas engine diagrams, 307, 339
  and heat, chap. 18
    pressure of steam, 14
Test cocks, 185
Tester, coal, 415
  gas, 415
Testing boilers, 221
Tests, boiler, 177
Theory of flues, chap. 33
  gases, kinetic, 30
  governor, 169, 174
  injector, 611–617
  link, chap. 28
Thermodynamics, chap. 21
  second law of, 340–2, 568, chap. 31
  Peabody's, 614
Thermometers, errors of, 238
Theta Phi diagram, 107
Thin shells, strength of, 196
Thomson, Prof. James, 598–604
Thomson's jet pump, 601–604
Thorneycroft boiler, 227, 232, 233
Three-crank engines, 33
Three-cylinder engine, 79
Throttling calorimeter, 354–5
  drying effect of, 354
  regulation by, 82, 83, 104, 290–1
Thrust block, 61
Thurston's formula, 392
Timing valve in gas engines, 451
Total heat of steam, 99
Town refuse, 261
Traction, 261–4
  and lighting engines, electric, 280
Train resistance, 262
Tram-car, work done on, 247
Tramways, 264
Transmission, efficiency of power, 283
  hydraulic power, 282
  of power, 282–3
  rope, 283
Travel of valve, 128
Trials of steam engines, 257–8, 270–80, 298–9, 375–81, 391–400
  gas engines, 281, 447, 454, 457
  oil engines, 462, 466
  of boilers, 426–7, 430–1, 435–7
Trick valve, 148
Trip gear, 176
Triple expansion, 79, 115, 379
Tube boilers, water, 226–236
  field, 217
  stay, 205
  strength of, 196, 203
Tubes in boilers, 216, 217
  Galloway, 178
Turbines, 8, 63–66, 599
  steam, 63–66, 256–257
    De Laval, 63, 64, 257
    Dow, 257
    Parson's, 256
"Turbinia," the, 8
Turning moment, 32, 110
  of crank, 32
Twin screw steamers, 59
Tyndall's Sound, 13
$t\ \phi$ diagram, 107

U

Units of energy, 250
Unwin, Prof., 319, 379, 462

V

Vacuum, good, 157
Value of expansion, chap. 3; 294–301
Valve chest, examples of, fig. 134
Valve, cut off, 174, 175, 404
  diagrams, 123, chap. 28
    harmonic, 123, 508–9
    oval, 487, 510
    Zeuner's, 133, 482
  double beat, 183, 186
    ported, 52, 148
  engine, four, 81
  equilibrium, 183, 186
  expansion, 174, 504
  gear, locomotive, 70
  gears, 36, 70, chap. 8, 167, 174–6, chap. 28
  gear, its office, 72–80
    radial, 137, 501–4
  leakage past, 81, 289
  lever safety, 192
  low water safety, 191
  Meyer's independent cut-off, 174, 504
  motion, Stewart Fink, 137
  motions, alteration of lead in, 138
    octaves in, 507–531
  Naylor's safety, 194
  Ramsbottom safety, 193
  seat, fig. 134
  slide, 36, chap. 7
  travel of, 128
  trick, 148
  cylindric, fig. 22
  feed, 190
  four, 81

Valve, locomotive slide, 129
pass, 51
piston, 148, fig. 134
regulation, 71, 183, 186
relief, fig. 36
safety, 189, 191–5
setting of, 149
starting, 51
stop, 184, 185, 221
vacuum on boiler, 188
Vapour engine, binary, 260
Vapours, 319
Van der Waals, 556, 559
Varying pressure, regulation by, 82, 83
Vehicles, resistance of, 262–4
Velocity of flow of steam, 605–611
piston, 122
Vertical boilers, 216
Vessels, air, 164
Vibrations of engines, 8–14, 28, chap. 29
indicator, 92
ships', 13
Vibratory effects, 113, 114
Virial, 558
Viscosity, 559
Volume, relation to temperature and pressure in gases, 331

W

Warming buildings, Kelvin's suggestion, 342
Waste in heat engines, 3, 103
Water, air in, 560
circulation of, 217
consumption of, 99
in cylinder, 18, 328, 370–3, chap. 35
density, 320–3, 327
entropy of, 243
feed, 100, chap. 9, 212, 226
gas, 421–2
hammer effects, 184
heater, feed, 212
jacket in gas engines, 477
in kettle, 14
level in boilers, 185, 188
low water safety valve, 191
missing, 78, 81, 100, 116, 289, 295, 297–300
and power, 83
Water power, 261
purifier, 226
tube boilers, 226–236
tubes, 178
Watt's governor, 166
time, workmanship in, 7
Wedmore, 512
Weight of marine engines and their power, 269–70
Wells' gas engine, 452
Welsh coal, 418
and other coal smoke, 209
Wetness of steam, 183, 353–7, 580
Wheel of locomotives, driving, 69
Wigan boiler, experiments on, 429
Wilcox and Babcock boiler, 227, 235–6
Willans, 299
Willans' central valve engine, 22, 30, 258, 395
experiments, 393–400
law, 82, 83, 104, 278, 290, 292
law of adiabatic expansion, 373
Willans and Robinson, 7
standard for steam engines, 368
Wimperis, Mr., 478–9
Wire drawing, 79, 80, 93
Wood as fuel, 416
Worcester, Marquis of, 6
Work, chap. 16
and coal, 257
done by an expanding fluid, 333
done on tram car, 247
done by varying forces, 247
experimental, 104
and heat, chap. 21
per cubic foot of steam, 287
per pound of steam, 76
Workmanship, 7, 22
Worthington's steam pump, fig. 21A, 158
Wrong assumption, 116

Y

Yarrow water tube boiler, 227, fig. 211

Z

Zeuner's valve diagram, 133, 482

THE END.

RICHARD CLAY AND SONS, LIMITED, LONDON AND BUNGAY.